Find-It-In-Front:
Dr. Pinball Section
The inside cover & the front 16 pages cover the basics: Fuses, Matrixes, Adjustments, Audits and more!

Section 3 details the Service Menu!
Diagnostics, Audits, Adjustments, Utilities *(Installs, USB, etc.)* and Tournament information!

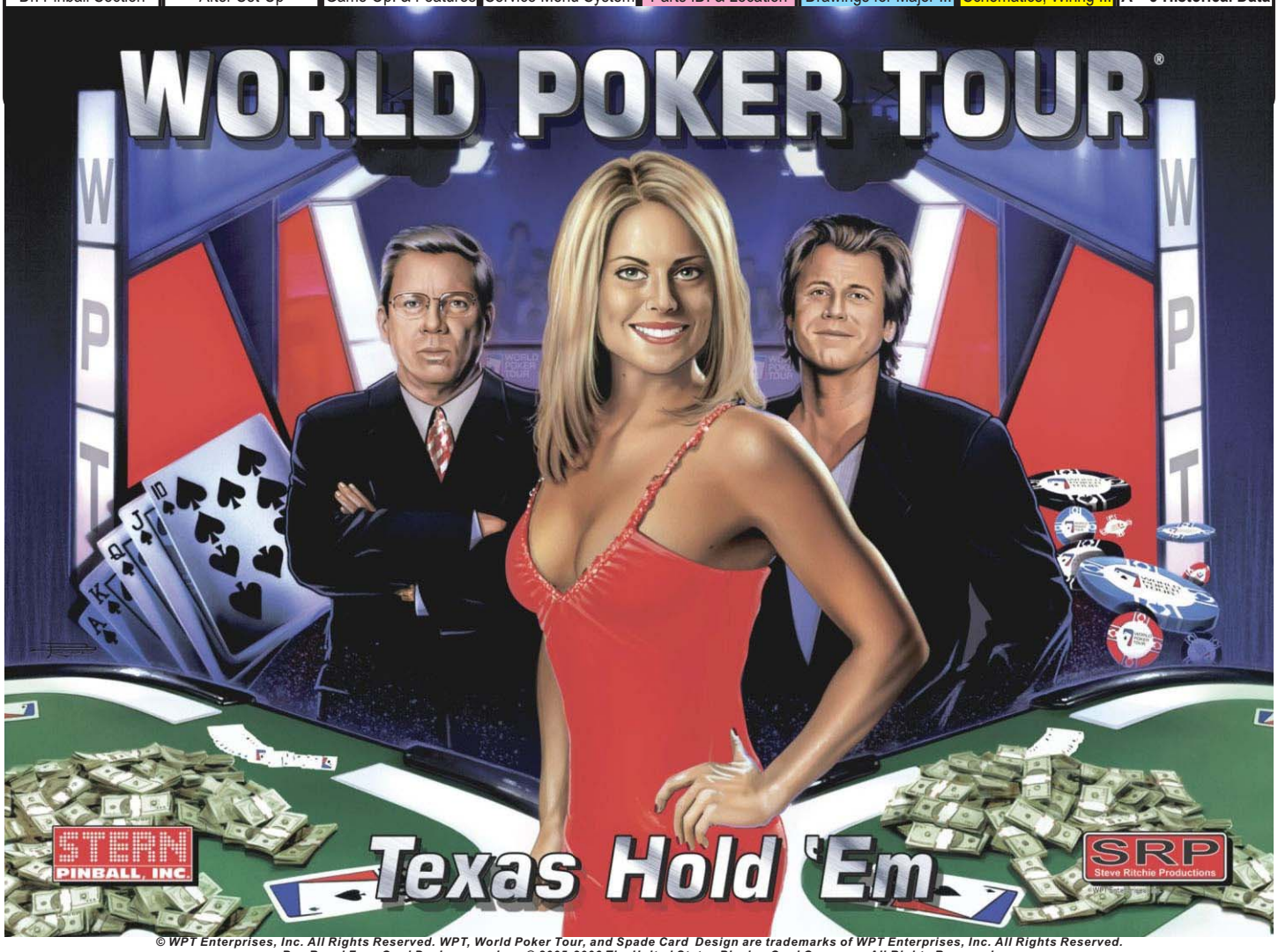

© WPT Enterprises, Inc. All Rights Reserved. WPT, World Poker Tour, and Spade Card Design are trademarks of WPT Enterprises, Inc. All Rights Reserved.
Bee Royal Face Card Designs used are © 2005-2006 The United States Playing Card Company. All Rights Reserved.

Your Parts Sales & Technical Support Team

Joe Blackwell
DIRECTOR,
Parts Sales &
Technical Support

Patrick Powers
Technical Support
ENGINEER

Chas Siddiqi
Technical Support
ENGINEER

Dorothy Brown
Parts Sales
SUPERVISOR

J. Alfer
Technical Support
Documentation
ADMINISTRATOR

Pinball Service Game Manual

Please call, eMail or visit us online for technical support, questions or comments regarding this pinball game.

Go to ***www.sternpinball.com*** *and click* ***Tech. Support & Parts Sales*** Tech Support & Parts Sales *Once there, you will find* ***Service Bulletins***, ***GAME Code***, ***Parts***, ***Appendixes***, ***Coin Cards***, ***helpful information*** *and much more!*

• *Toll-Free:* **1-800-KICKERS (542-5377)** *or* **1-708-345-7700** • *eMail:* **parts.service@sternpinball.com** •

Stern® Pinball, Inc.

All Rights Reserved.

Printed in the U.S.A.
June 2006

SPI Part Number
780-5088-00

HOW TO UPDATE YOUR GAME CODE FOR THE NEW S.A.M. SYSTEM

USB Compatible Memory Stick (aka Thumb, Flash *or* Jump Drives) required to copy game code into system.
S.A.M. System compatible, tested & SPI approved USB Memory Sticks 128MB+
available through your local distributor: Ask for **SPI Part Number 970-0128-00**

** to get the Memory Stick with the latest **Game Code** copied to it, add "**the game title name**" to above part number.*

STYLE, COLOR, SIZE AND MANUFACTURER SUBJECT TO CHANGE.

Game Code is subject to change. Update this game with the latest code downloaded from our website, from another game *or* order through your local distributor *(use SPI PN + name above).*

*Upon power-up the display will describe the version of code installed in your game. When directed to do so (via Service Bulletin or website announcement) you will need to update your code ... with the **BOOT FLASH EPROM*** installed, **here's how:***

● Green Button	●● Red Buttons	● Black Button
Press to **Escape Back** *(or **Exit**).*	Press to move **< Left , Right >**. Press to **– Decrease** *or* **+ Increase** values *or* to change settings.	Press to **Enter Select** *(or '**OK**').*

STEP 1 Open the Back Box and locate the **8-Position Dip Switch** *(SW1 on the CPU/Sound Board).*

STEP 2 Switch Dip Switch **#8** to **'ON'**.
*(***BOOT FLASH EPROM** *must be installed.)*

STEP 3 Press the **White Reset Button** *(S1 RESET on the CPU/Sound Board) or* Power Cycle the game **OFF/ON** *(ON/OFF Switch is located on the outside of the cabinet bottom, front right).*

STEP 4 Using the **4-Button Service Switch Set** *(inside the Coin Door):*

4A } Press **[SELECT]** to begin.
4B } With the "UPDT" *Icon highlighted,* press **[SELECT]**.
4C } Insert the Memory Stick [with latest file(s)] into the USB Port.
4D } *If more than one file is present on the Memory Stick, press* [<] *or* [>] *to locate your file.* Press **[SELECT]** to update.
4E } Follow on-screen prompts.

CPU/Sound Board (S.A.M. System)

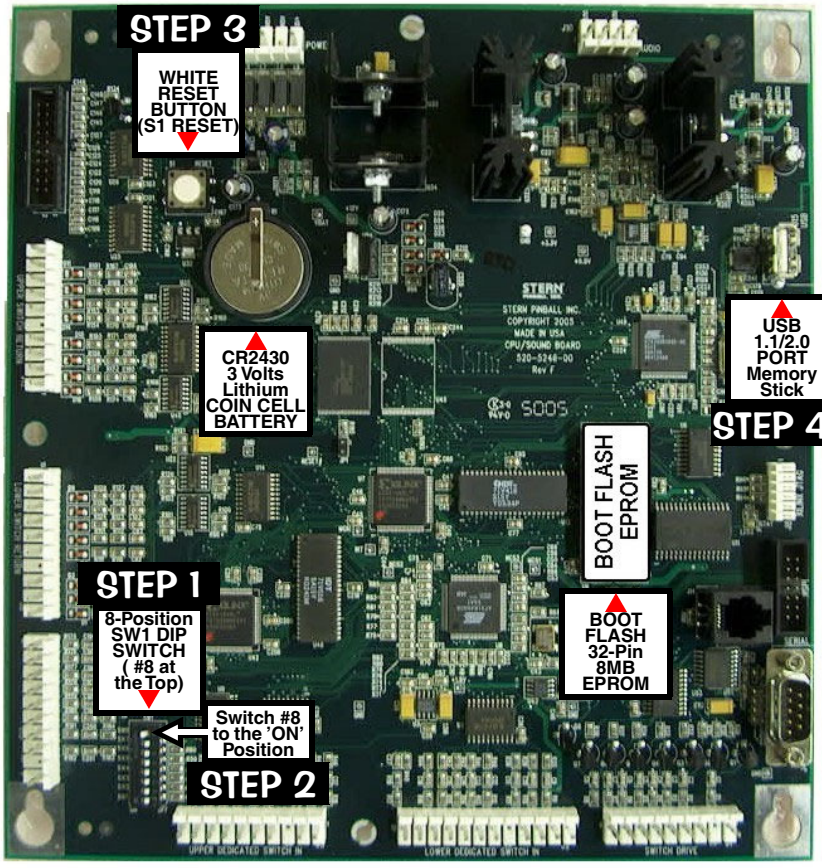

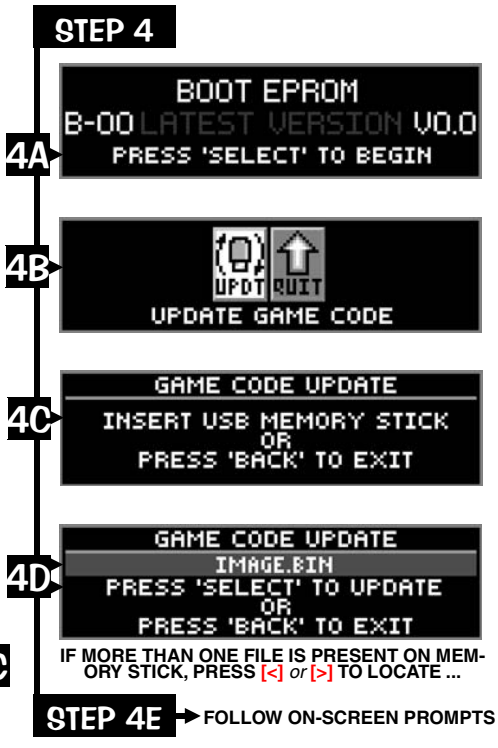

You can also retrieve your latest code from another game! From the **USB MENU** via the **UTILITIES MENU**, select the "BKUP" *Icon instead* and download to your Memory Stick. *Review the end of Section **3**, Chapter **5**.*

! Quick Tip ~ *Try backing up your current code prior to installing your new code, just in case your Memory Stick file was corrupted by a computer glitch while you were copying / downloading.*

Got confused? Comments? Questions? Call Technical Support at 800-542-5377 or 708-345-7700 (Option 1).

For Proper Operation of this Pinball Game, (4) Pinballs must be installed in the Ball Trough!

Backbox Fuses*, Cabinet Fuses, Playfield Fuses and Cabinet Switches

QUICK REFERENCE FUSE CHART

3/4A S.B. 200-5000-17 | 3A S.B. 200-5000-08 | 4A S.B. 200-5000-06 | 5A S.B. 200-5000-01 | 7A S.B. 200-5000-03 | 8A S.B. 200-5000-05

BACKBOX FUSES

I/O POWER DRIVER BOARD

*with **RED LED** STATUS INDICATORS (if any **RED LED** is **OFF**, check the fuse)*

F1	5A S.B.	5.7VAC	G.I. Lamps	[BROWN-WHITE⇆WHT-BRN]
F2	5A S.B.	5.7VAC	G.I. Lamps	[YELLOW⇆WHITE-YEL Circuit]
F3	5A S.B.	5.7VAC	G.I. Lamps	[GREEN⇆WHITE-GRN Circuit]
F4	5A S.B.	5.7VAC	G.I. Lamps	[VIOLET⇆WHITE-VIO Circuit]
F5	7A S.B.	50VDC	Coils / Flippers	[48VAC *feed to* BRDG 1]
F6	3A S.B.	24VAC	Motor or *Special Application*	
F7	4A S.B.	50VDC	Magnet(s) or *Special Application*	
F8	3A S.B.	50VDC	Coils	
F9	8A S.B.	18VDC	Control Lamps	[13VAC *feed to* BRDG 4]
F10	5A S.B.	20VDC	Coils / Flashers	[16VAC *feed to* BRDG 2]
F11	4A S.B.	5VDC	Logic Power	[8VAC *feed to* BRDG 5]
F12	5A S.B.	12VDC	Audio	[19VAC *feed to* BRDG 3]
F13	5A S.B.	12VDC	Audio	[19VAC *feed to* BRDG 3]

DISPLAY POWER SUPPLY BOARD

F1	¾A S.B.	90VDC	High Voltage Dot Display Board

CABINET FUSES

POWER (SERVICE OUTLET) BOX

(Access through Coin Door inside cabinet, front bottom.)

8A S.B.	110-120V	Main Line *US / Canada / Japan*
5A S.B.	220-240V	Main Line *International*

PLAYFIELD FUSES

FLIPPER OR SPECIAL APPLICATION

(Coil Fuses are located under the playfield near assembly.)

3A S.B.	50VDC	R. Flipper [BLU-YEL⇆RED-YEL]
3A S.B.	50VDC	L. Flipper [GRY-YEL⇆RED-YEL]
3A S.B.	50VDC	*Additional Flipper Coil, if used.*
3A S.B.	50VDC	*Spcl. Application Coil, if used.*

*For location & more details on fuses, see Sec. **5**, Chp. **2**.*

ALL FUSES ARE 250V S.B. (SLO-BLO)
SEE FUSE OR TABLES FOR AMP RATING
CAUTION : FOR CONTINUED PROTECTION AGAINST RISK OF FIRE, REPLACE ONLY WITH SAME TYPE FUSE WITH IDENTICAL ELECTRICAL RATING!

Stern Pinball®, Inc. ©2006 820-6384-00 Rev. A

**CPU/Sound Board does not have fuses.*

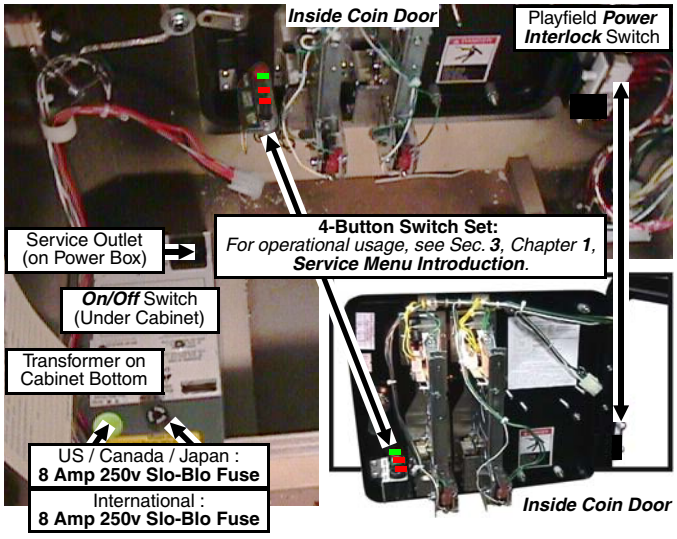

FIND-IT-IN-FRONT: Dr. Pinball Section Explained

The key technical data from various parts of the manual were extracted and combined into the **"Find- It-In-Front: Dr. Pinball Section."** This front section (Pages **DR. ❶ - ⓰**) will assist the technician in locating important technical information needed to troubleshoot the Pinball Machine. *To enter the **SERVICE MENU**, read below.*

● ● ● ● Service Switch X4 Set Overview

The four buttons *(inside Coin Door)* have dual functions depending if you have entered the **Service Menu** or not.

Functions in Game or Attract Mode

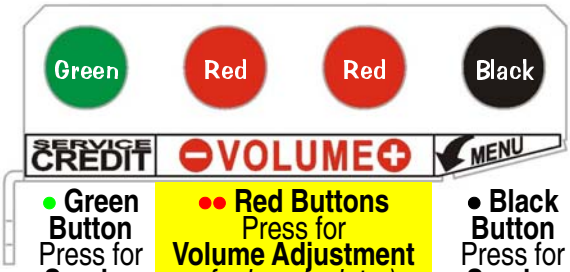

● Green Button	●● Red Buttons	● Black Button
Press for **Service Credit(s)**.	Press for **Volume Adjustment** – *for less (quieter),* + *for more (louder)*	Press for **Service Menu** *entry.*

Functions in the Service Menu

● Green Button	●● Red Buttons	● Black Button
Press to **Escape Back** *(or **Exit**).*	Press to move **< Left , Right >.** Press to **– Decrease** *or* **+ Increase** values *or* to change settings.	Press to **Enter Select** *(or '**OK**').*

OPEN THE COIN DOOR TO ACCESS THE SERVICE SWITCH X4 SET.

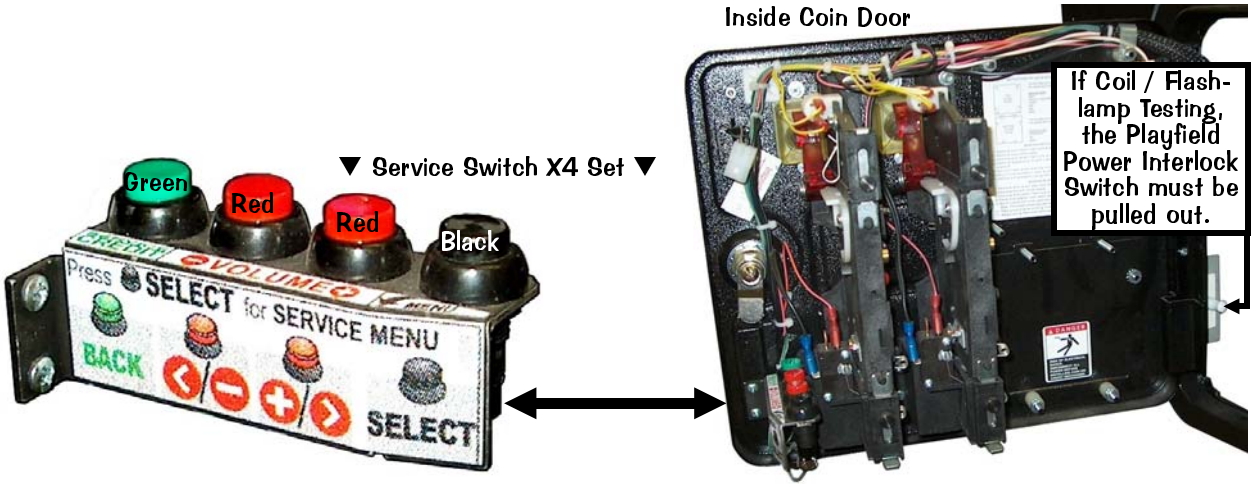

EXAMPLE:

To enter the **SERVICE MENU**, then enter the **SWITCH TEST MENU** via the **DIAGNOSTIC MENU**, perform the below steps.

Step 1 Press **[SELECT]**.

Step 2 With the "DIAG" *Icon* highlighted, press **[SELECT]**.

Step 3 With the "SW" *Icon* highlighted, press **[SELECT]**.

Step 4 With the "TEST" *Icon* highlighted, press **[SELECT]**.

*Press any switch. If wired correctly, the information in the display will match the information in the Switch Matrix (see DR. **4**).*

Press **[<]** or **[>]** to move left or right through the menus.

Press **[BACK]** to go back a menu, exit or escape at any time.

Continue through the other menus.

More details & information about the ***SERVICE MENU*** *is covered in Section **3**. The Service Menu is subject to change. Update this game with the latest code downloaded from out website with a USB Memory Stick (64MB min., recommendation 128MB or higher). See the inside front cover for directions or in the Service Menu "Go To Utilities Menu" then "Go To USB Menu" and follow prompts.*

DIAGNOSTIC AIDS

This ***audible / visual alert display*** is shown when the **50V / 20V Power** is disabled *(by opening the Coin Door)*. **PULL OUT THE INTERLOCK SWITCH ONLY WHILE IN THE SERVICE MENU FOR COIL, SWITCH OR PLAY TESTING WHEN THE COIN DOOR IS REQUIRED TO STAY OPEN FOR SERVICE BUTTON USE!** Pulling out the Power Interlock Switch or pressing the 'escape' **Green [BACK] Button** will remove the alert display. Initial display presentation is accompanied by 3 audible tones *(the bright display warning will go dim after approximately 30 seconds).*

This ***alert display*** is shown momentarily during **Game Mode** or **Power-Up** to alert the operator of a coil malfunction *(coil doesn't energize or coil fires a multiple number of times)*. **OPERATOR ALERT!** works by monitoring any *switch activated coil* that has the potential to trap a ball when disabled *(e.g. in the Auto Launch, Scoop, Eject, etc.)*. This alert can also appear if a switch associated with a coil *(e.g. #1 Trough Up-Kicker, #2 Auto Launch, etc.)* is stuck closed *(caused by a switch jam or stuck ball)*; the **CPU/Sound Board** will activate the coil approximately ten times and if the switch remains closed, the game will report this switch in **Technician Alerts** & will indicate the *following display warning:*

If this ***Tech Report Alert flashes*** *(along with an audible sound)*, the game has detected faulty switches and/or missing pinballs. Select the "TECH" *Icon* for information *(review Section **3**, Chapter **2**, **Technician Alerts**). For this **Alert display** to appear, Standard Adjustment **61**, Tech Alert Warning, **must be changed** to **POWERUP**, **COIN DOOR** or **POWERUP AND COIN DOOR**. The default is **NEVER** (review Section **3**, Chapter **4**, **GO TO ADJUSTMENTS MENU**, Standard Adjustments).*

CPU DIP SWITCH SETTINGS

The 8-Pos. Dip Switch [SW1] is on the CPU/Sound Board (between Conn. J3 & J13, lower left corner)

CPU COUNTRY SETTING:	Pos.	1	2	3	4	5	6	7	8
USA	ON								
	OFF	▼	▼	▼	▼	▼	▼	▼	▼

CPU COUNTRY SETTING:	Pos.	1	2	3	4	5	6	7	8
Austria	ON	▲							
	OFF		▼	▼	▼	▼	▼	▼	▼

CPU COUNTRY SETTING:	Pos.	1	2	3	4	5	6	7	8
Australia	ON	▲		▲	▲				
	OFF		▼			▼	▼	▼	▼

CPU COUNTRY SETTING:	Pos.	1	2	3	4	5	6	7	8
Belgium	ON		▲						
	OFF	▼		▼	▼	▼	▼	▼	▼

CPU COUNTRY SETTING:	Pos.	1	2	3	4	5	6	7	8
Canada 1	ON	▲	▲						
	OFF			▼	▼	▼	▼	▼	▼

CPU COUNTRY SETTING:	Pos.	1	2	3	4	5	6	7	8
Canada 2	ON		▲		▲	▲			
	OFF	▼		▼			▼	▼	▼

CPU COUNTRY SETTING:	Pos.	1	2	3	4	5	6	7	8
Croatia	ON		▲	▲		▲			
	OFF	▼			▼		▼	▼	▼

CPU COUNTRY SETTING:	Pos.	1	2	3	4	5	6	7	8
Denmark	ON	▲			▲				
	OFF		▼	▼		▼	▼	▼	▼

CPU COUNTRY SETTING:	Pos.	1	2	3	4	5	6	7	8
Finland	ON	▲		▲					
	OFF		▼		▼	▼	▼	▼	▼

CPU COUNTRY SETTING:	Pos.	1	2	3	4	5	6	7	8
France	ON		▲	▲					
	OFF	▼			▼	▼	▼	▼	▼

CPU COUNTRY SETTING:	Pos.	1	2	3	4	5	6	7	8
Germany	ON	▲	▲	▲					
	OFF				▼	▼	▼	▼	▼

CPU COUNTRY SETTING:	Pos.	1	2	3	4	5	6	7	8
Greece	ON	▲	▲	▲	▲				
	OFF					▼	▼	▼	▼

CPU COUNTRY SETTING:	Pos.	1	2	3	4	5	6	7	8
Italy	ON				▲				
	OFF	▼	▼	▼		▼	▼	▼	▼

CPU COUNTRY SETTING:	Pos.	1	2	3	4	5	6	7	8
Japan	ON	▲		▲		▲			
	OFF		▼		▼		▼	▼	▼

CPU COUNTRY SETTING:	Pos.	1	2	3	4	5	6	7	8
Middle East	ON	▲	▲	▲		▲			
	OFF				▼		▼	▼	▼

CPU COUNTRY SETTING:	Pos.	1	2	3	4	5	6	7	8
Netherlands	ON			▲					
	OFF	▼	▼		▼	▼	▼	▼	▼

CPU COUNTRY SETTING:	Pos.	1	2	3	4	5	6	7	8
New Zealand	ON					▲			
	OFF	▼	▼	▼	▼		▼	▼	▼

CPU COUNTRY SETTING:	Pos.	1	2	3	4	5	6	7	8
Norway	ON		▲		▲				
	OFF	▼		▼		▼	▼	▼	▼

CPU COUNTRY SETTING:	Pos.	1	2	3	4	5	6	7	8
Portugal	ON	▲				▲			
	OFF		▼	▼	▼		▼	▼	▼

CPU COUNTRY SETTING:	Pos.	1	2	3	4	5	6	7	8
Russia	ON	▲			▲	▲			
	OFF		▼	▼			▼	▼	▼

CPU COUNTRY SETTING:	Pos.	1	2	3	4	5	6	7	8
So. Africa	ON			▲		▲			
	OFF	▼	▼		▼		▼	▼	▼

CPU COUNTRY SETTING:	Pos.	1	2	3	4	5	6	7	8
Spain	ON		▲			▲			
	OFF	▼		▼	▼		▼	▼	▼

CPU COUNTRY SETTING:	Pos.	1	2	3	4	5	6	7	8
Sweden	ON	▲	▲		▲				
	OFF			▼		▼	▼	▼	▼

CPU COUNTRY SETTING:	Pos.	1	2	3	4	5	6	7	8
Switzerland	ON			▲	▲				
	OFF	▼	▼			▼	▼	▼	▼

CPU COUNTRY SETTING:	Pos.	1	2	3	4	5	6	7	8
Taiwan	ON				▲	▲			
	OFF	▼	▼	▼			▼	▼	▼

CPU COUNTRY SETTING:	Pos.	1	2	3	4	5	6	7	8
UK	ON		▲	▲	▲				
	OFF	▼				▼	▼	▼	▼

CPU/SND PCB SETTING:	Pos.	1	2	3	4	5	6	7	8
UPDATE CODE	ON								▲
	OFF	▼	▼	▼	▼	▼	▼	▼	

Note: *Slide Dip Switch 8 to Position **ON** (with Dip Switches 1-7 in the **OFF** Position) only to reboot the game with the latest version BOOT EPROM installed at **U9** on the CPU/Sound Board (S.A.M. System only). Currently, this is also the procedure to update your game with the latest software code update file. For the latest version, visit our website. If you have questions about updating your game code, call Technical Support for assistance.*

SWITCH MATRIX GRID (01-64) {Switch Locations on the next page}

CPU/ Sound Board	01 IC-U22A	02 IC-U22B	03 IC-U22C	04 IC-U22D	05 IC-U15A	06 IC-U15B	07 IC-U15C	08 IC-U15D	09 IC-U35A	10 IC-U35B	11 IC-U35C	12 IC-U35D	13 IC-U40A	14 IC-U40B	15 IC-U40C	16 IC-U40D
	RETURN▲	RETURN▲	RETURN▲	RETURN▲	RETURN▲	RETURN▲	RETURN▲	RETURN▲	RETURN▲	RETURN▲	RETURN▲	RETURN▲	RETURN▲	RETURN▲	RETURN▲	RETURN▲
	WHT-BRN J6-P9	WHT-RED J6-P8	WHT-ORG J6-P7	WHT-YEL J6-P6	WHT-GRN J6-P5	WHT-BLU J6-P3	WHT-VIO J6-P2	WHT-GRY J6-P1	TAN-BLK J12-P9	TAN-RED J12-P8	TAN-ORG J12-P7	TAN-YEL J12-P6	TAN-GRN J12-P4	TAN-BLU J12-P3	TAN-VIO J12-P2	TAN-WHT J12-P1
01 Q1 DRIVE ▶ GRN-BRN J1-P1	SW. # 1	SW. # 2	SW. # 3	SW. # 4	SW. # 5	SW. # 6	SW. # 7	SW. # 8	SW. # 9	SW. # 10	SW. # 11	SW. # 12	SW. # 13	SW. # 14	SW. # 15	SW. # 16
	NOT USED	NOT USED	SHOOTER LANE VUK « D.O.T.S. » 180-5209-00 *On Assembly*	RIGHT DROP #1 (BOT) OPTO 'U' 520-5252-04 *On Assembly*	RIGHT DROP #2 OPTO 'U' 520-5252-04 *On Assembly*	RIGHT DROP #3 OPTO 'U' 520-5252-04 *On Assembly*	RIGHT DROP #4 (TOP) OPTO 'U' 520-5252-04 *On Assembly*	RIGHT ORBIT SPINNER 180-5010-04 *Above P/F*	RIGHT RAMP ENTER GATE SW. 180-5010-01 *Above P/F*	MIDDLE DROP #1 (L) OPTO 'U' 520-5252-04 *On Assembly*	MIDDLE DROP #2 OPTO 'U' 520-5252-04 *On Assembly*	MIDDLE DROP #3 OPTO 'U' 520-5252-04 *On Assembly*	MIDDLE DROP #4 (R) OPTO 'U' 520-5252-04 *On Assembly*	LOWER RIGHT 10 PT 180-5054-00 *Below P/F*	TOURNA-MENT START CABINET 180-5119-03 *Front Molding*	START BUTTON CABINET 180-5174-00 *In Cabinet*
02 Q2 DRIVE ▶ GRN-RED J1-P3	SW. # 17	SW. # 18	SW. # 19	SW. # 20	SW. # 21	SW. # 22	SW. # 23	SW. # 24	SW. # 25	SW. # 26	SW. # 27	SW. # 28	SW. # 29	SW. # 30	SW. # 31	SW. # 32
	NOT USED	4-BALL TROUGH #4 (L) 180-5119-02 *On Assembly*	4-BALL TROUGH #3 180-5119-02 *On Assembly*	4-BALL TROUGH #2 180-5119-02 *On Assembly*	VUK OPTO TROUGH #1 (R) TRANS. / REC. TX 515-0173-00 RX 515-0174-00	4-BALL STACKING OPTO TRANS. / REC. TX 515-0173-00 RX 515-0174-00	SHOOTER LANE 180-5157-00 *Below P/F*	LEFT OUTLANE 500-6227-04 *Below P/F*	LEFT RETURN LANE 500-6227-04 *Below P/F*	LEFT SLING-SHOT 180-5054-00 *2 per Asm.*	RIGHT SLING-SHOT 180-5054-00 *2 per Asm.*	RIGHT RETURN LANE 500-6227-04 *Below P/F*	RIGHT OUTLANE 500-6227-04 *Below P/F*	LEFT BUMPER 180-5015-04 *On Assembly*	RIGHT BUMPER 180-5015-04 *On Assembly*	BOTTOM BUMPER 180-5015-04 *On Assembly*
03 Q3 DRIVE ▶ GRN-ORG J1-P4	SW. # 33	SW. # 34	SW. # 35	SW. # 36	SW. # 37	SW. # 38	SW. # 39	SW. # 40	SW. # 41	SW. # 42	SW. # 43	SW. # 44	SW. # 45	SW. # 46	SW. # 47	SW. # 48
	LEFT DROP #1 (BOT) OPTO 'U' 520-5252-04 *On Assembly*	LEFT DROP #2 OPTO 'U' 520-5252-04 *On Assembly*	LEFT DROP #3 OPTO 'U' 520-5252-04 *On Assembly*	LEFT DROP #4 OPTO 'U' 520-5252-04 *On Assembly*	LEFT DROP #5 OPTO 'U' 520-5252-04 *On Assembly*	LEFT DROP #6 OPTO 'U' 520-5252-04 *On Assembly*	LEFT DROP #7 OPTO 'U' 520-5252-04 *On Assembly*	LEFT DROP #8 (TOP) OPTO 'U' 520-5252-04 *On Assembly*	LOWER LEFT 10 PT 180-5054-00 *Below P/F*	LOWER LEFT TARGET 500-5232-08 *Below P/F*	LEFT ORBIT SPINNER 180-5010-04 *Above P/F*	LEFT ORBIT HI 180-5087-00 *Above P/F*	POP STANDUP #1 (L) RED SQ. 500-6983-02 *Below P/F*	POP STANDUP #2 RED SQ. 500-6983-02 *Below P/F*	POP STANDUP #3 RED SQ. 500-6983-02 *Below P/F*	POP STANDUP #4 (R) RED SQ. 500-6983-02 *Below P/F*
04 Q4 DRIVE ▶ GRN-YEL J1-P5	SW. # 49	SW. # 50	SW. # 51	SW. # 52	SW. # 53	SW. # 54	SW. # 55	SW. # 56	SW. # 57	SW. # 58	SW. # 59	SW. # 60	SW. # 61	SW. # 62	SW. # 63	SW. # 64
	POP EJECT « D.O.T.S. » 180-5209-00 *On Assembly*	RIGHT ORBIT HI GATE SW. 180-5087-00 *Above P/F*	SHOOTER VUK EXIT GATE SW. 180-5010-01 *Above P/F*	RIGHT RAMP MADE OPTO PAIR 500-6775-00 *On Assembly*	UPF EXIT GATE SW. 180-5010-01 *Above P/F*	LEFT RAMP MADE OPTO PAIR 500-6775-00 *On Assembly*	LEFT VUK « D.O.T.S. » 180-5209-00 *on Back Panel*	UPF ABOVE LEFT VUK OPTO PAIR 500-6775-00 *On Assembly*	JAIL BARS BASH TRANS. / REC. TX 520-5247-00 RX 520-5248-00	JAIL BARS REST TRANS. / REC. TX 520-5247-00 RX 520-5248-00	TRANS-FER TUBE OPTO PAIR 500-6775-00 *On Assembly*	UPF STANDUP #1 (L) WHT RECT. 515-7498-08-01 *on Back Panel*	UPF STANDUP #2 WHITE SQ. 515-7497-08-01 *on Back Panel*	UPF STANDUP #3 WHITE SQ. 515-7497-08-01 *on Back Panel*	JAIL BARS UP OPTO 'U' 520-5251-00 *On Assembly*	NOT USED

Wire Color Abbreviations used: BLK Black · BLU Blue · BRN Brown · GRY Gray · GRN Green · LGN Light Grn. · ORG Orange · PNK Pink · RED Red · TAN Tan · VIO Violet · WHT White · YEL Yellow

Dedicated Switches (D1-D24) {Dedicated Switch Locations on the next page} // CPU/Snd. SW1 Dip Switches (1-8)

CPU/SND Board	IC-U2 PNK-BRN J2-P2	IC-U2 PNK-RED J2-P3	IC-U2 PNK-ORG J2-P4	IC-U2 PNK-YEL J2-P6	IC-U2 PNK-GRN J2-P7	IC-U2 PNK-BLU J2-P8	IC-U2 PNK-VIO J2-P9	IC-U2 PNK-GRY J2-P10	IC-U4 GRY-BRN J3-P1	IC-U4 GRY-RED J3-P2	IC-U4 GRY-ORG J3-P4	IC-U4 GRY-YEL J3-P5	IC-U4 GRY-GRN J3-P6	IC-U4 GRY-BLU J3-P7	IC-U4 GRY-VIO J3-P8	IC-U4 GRY-BLK J3-P9
GROUND (BLK) J2-P1/11 & J3-P10	SW. D-1	SW. D-2	SW. D-3	SW. D-4	SW. D-5	SW. D-6	SW. D-7	SW. D-8	SW. D-9	SW. D-10	SW. D-11	SW. D-12	SW. D-13	SW. D-14	SW. D-15	SW. D-16
	LEFT COIN SLOT 180-5204-00 *Coin Door*	CENTER COIN SLOT/DBA 180-5204-00 *Coin Door*	RIGHT COIN SLOT 180-5204-00 *Coin Door*	4TH COIN SLOT 180-5204-00 *Coin Door*	5TH COIN SLOT IF USED	NOT USED	LT POST SAVE (UK ONLY) 180-5160-01 *Cabinet Side*	RT POST SAVE (UK ONLY) 180-5160-01 *Cabinet Side*	LEFT FLIPPER BUTTON 180-5160-01 *Cabinet Side*	LEFT FLIPPER E.O.S. 180-5149-00 *Flipper Asm.*	RIGHT FLIPPER BUTTON 180-5160-01 *Cabinet Side*	RIGHT FLIPPER E.O.S. 180-5149-00 *Flipper Asm.*	UPR. LT. FLIPPER BUTTON 180-5160-01 *Cabinet Side*	UPR. LT. FLIPPER E.O.S. 180-5149-00 *Flipper Asm.*	UPR. RT. FLIPPER BUTTON 180-5160-01 *Cabinet Side*	UPR. RT. FLIPPER E.O.S. 180-5149-00 *Flipper Asm.*

CPU/SND Board	IC-41 LGN-BRN J13-P1	IC-41 LGN-RED J13-P3	IC-41 LGN-ORG J13-P4	IC-41 LGN-YEL J13-P5	IC-41 LGN-BLK J13-P6	IC-41 LGN-BLU J13-P7	IC-41 LGN-VIO J13-P8	IC-41 LGN-GRY J13-P9
GROUND (BLK) J13-P10	SW. D-17	SW. D-18	SW. D-19	SW. D-20	SW. D-21	SW. D-22	SW. D-23	SW. D-24
	TILT PENDULUM *(PLUMB BOB)* *See Sec. 4, Chp. 1, Pg. 63 for cab. parts*	SLAM TILT (OPT) OPTIONAL 502-5032-00 *Optional Kit*	TICKET NOTCH IF USED 180-5119-02 *Below P/F*	NOT USED	BACK BUTTON *(GREEN)* 180-5192-04 *Coin Door*	< / – BUTTON *(RED)* 180-5192-02 *Coin Door*	+ / > BUTTON *(RED)* 180-5192-02 *Coin Door*	SELECT BUTTON *(BLACK)* 180-5192-00 *Coin Door*

CPU/SOUND BD. SW1 DIP SWITCH *(located between Connectors J3/J13)*							
DIP SWITCH POSITION #1 ON / OFF	DIP SWITCH POSITION #2 ON / OFF	DIP SWITCH POSITION #3 ON / OFF	DIP SWITCH POSITION #4 ON / OFF	DIP SWITCH POSITION #5 ON / OFF	DIP SWITCH POSITION #6 ON / OFF	DIP SWITCH POSITION #7 ON / OFF	DIP SWITCH POSITION #8 ON / OFF

Find-It-In-Front: Dr. Pinball

WPT™ WORLD POKER TOUR

SWITCH MENU: SWITCH, ACTIVE, SINGLE & SERVICE

SWITCH LOCATIONS

{Switch Matrix Grid (01-64) on the previous page}

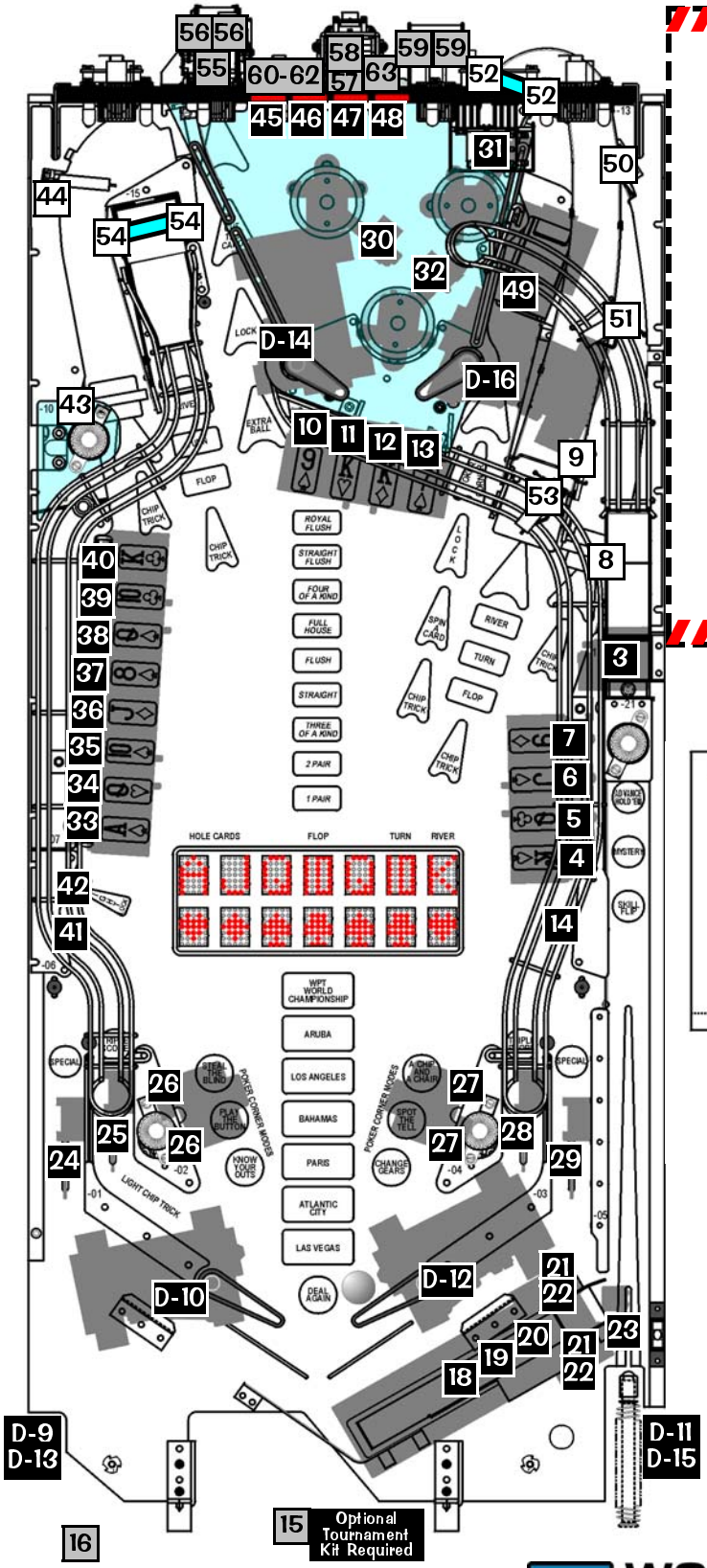

Typical Switch Wiring & Schematic

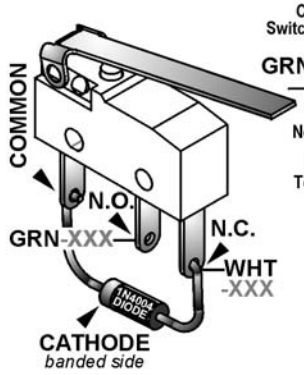

Column: Switch Drive Wire — Blocking Diode (1N4004) — Row: Switch Return Wire

GRN-XXX — WHT-XXX

N.O.	COM.	N.C.
Normally Open Switch Terminal	Common Switch Terminal	Normally Closed Switch Terminal

-XXX = Varying Wire Color. See Matrix Grid for color.

Dedicated Switch Schematic

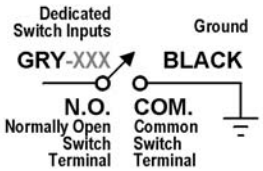

◀ Playfield | Back Panel ▼

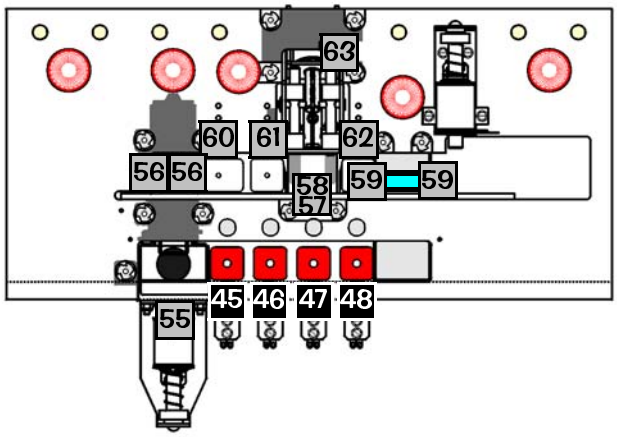

= Switches above Playfield.
= Switches below Playfield.
= Switches in Cabinet & on Back Panel.

Switch Part Notes: *¥ Yen Coin Switch is 180-5091-00. Part Numbers which start with 515- or 500- include the bracket, target, and/or housing.*

Sw. 56 Part Note: *The Switch is comprised of a Hanger Bracket (535-5319-00) and Contact Wire (535-7563-01) located in the Cabinet.* ***Some Switch Diodes may be located under the playfield, in the Cabinet*** *or* ***Backbox*** *on Terminal Strips* ***or*** *Diode Boards and not on the assemblies.*

DOTS: Diode On Terminal Strip, *see Sec.* ***5****, Chp.****2****,* ***Playfield Wiring****.*

Find-It-In-Front: Dr. Pinball

WORLD POKER TOUR™

LAMP MATRIX GRID (01-80) {Lamp Locations on the next page}

I / O Power Driver Board	01 IC-U17 18VDC YEL-BRN J13-P9	02 IC-U16 18VDC YEL-RED J13-P8	03 IC-U15 18VDC YEL-ORG J13-P7	04 IC-U14 18VDC YEL-BLK J13-P6	05 IC-U13 18VDC YEL-GRN J13-P5	06 IC-U12 18VDC YEL-BLU J13-P4	07 IC-U11 18VDC YEL-VIO J13-P3	08 IC-U10 18VDC YEL-GRY J13-P1
01 Q33 GROUND RED-BRN J12-P1	#555 Clear LP. # 1 START BUTTON 165-5002-00	#CM86 Clr. LP. # 2 TOURNAMENT BUTTON 165-5103-00	#555 Clear LP. # 3 DEAL AGAIN 165-5002-00	#555 Clear LP. # 4 LEFT SPECIAL 165-5002-00	#555 Clear LP. # 5 L. TRIPLE SCORE 165-5002-00	#555 Clear LP. # 6 R. TRIPLE SCORE 165-5002-00	#555 Clear LP. # 7 RIGHT SPECIAL 165-5002-00	#555 Clear LP. # 8 LIGHT LOCK 165-5002-00
02 Q34 GROUND RED-BLK J12-P2	#555 Clear LP. # 9 ONE PAIR 165-5002-00	#555 Clear LP. # 10 TWO PAIR 165-5002-00	#555 Clear LP. # 11 THREE OF A KIND 165-5002-00	#555 Clear LP. # 12 SKILL FLIP 165-5002-00	#555 Clear LP. # 13 LEFT RAMP ARROW 165-5002-00	#44 Clear LP. # 14 LEFT RAMP RIVER 165-5000-44-HF	#555 Clear LP. # 15 RIGHT RAMP ARROW 165-5002-00	#44 Clear LP. # 16 RIGHT RAMP RIVER 165-5000-44-HF
03 Q35 GROUND RED-ORG J12-P3	#555 Clear LP. # 17 STRAIGHT 165-5002-00	#555 Clear LP. # 18 FLUSH 165-5002-00	#555 Clear LP. # 19 FULL HOUSE 165-5002-00	#555 Clear LP. # 20 MYSTERY 165-5002-00	#44 Clear LP. # 21 LEFT RAMP TURN 165-5000-44-HF	#44 Clear LP. # 22 LEFT RAMP FLOP 165-5000-44-HF	#44 Clear LP. # 23 RIGHT RAMP TURN 165-5000-44-HF	#44 Clear LP. # 24 RIGHT RAMP FLOP 165-5000-44-HF
04 Q36 GROUND RED-YEL J12-P4	#555 Clear LP. # 25 FOUR OF A KIND 165-5002-00	#555 Clear LP. # 26 STRAIGHT FLUSH 165-5002-00	#555 Clear LP. # 27 ROYAL FLUSH 165-5002-00	#555 Clear LP. # 28 ADVANCE HOLD 'EM 165-5002-00	#555 Clear LP. # 29 LEFT RAMP CHIP TRICK 165-5002-00	#555 Clear LP. # 30 EJECT ARROW 165-5002-00	#555 Clear LP. # 31 WPT CHAMP-IONSHIP 165-5002-00	#555 Clear LP. # 32 RIGHT RAMP CHIP TRICK 165-5002-00
05 Q37 GROUND RED-GRN J12-P5	#44 Clear LP. # 33 ACE OF SPADES 165-5000-44-HF	#44 Clear LP. # 34 QUEEN OF HEARTS 165-5000-44-HF	#44 Clear LP. # 35 TEN OF SPADES 165-5000-44-HF	#44 Clear LP. # 36 JACK OF DIAMONDS 165-5000-44-HF	#555 Clear LP. # 37 POKER CORNER 165-5002-00	#555 Clear LP. # 38 EJECT LOCK 165-5002-00	#555 Clear LP. # 39 ARUBA 165-5002-00	#555 Clear LP. # 40 LOS ANGELES 165-5002-00
06 Q38 GROUND RED-BLU J12-P6	#44 Clear LP. # 41 EIGHT OF SPADES 165-5000-44-HF	#44 Clear LP. # 42 QUEEN OF SPADES 165-5000-44-HF	#44 Clear LP. # 43 TEN OF CLUBS 165-5000-44-HF	#44 Clear LP. # 44 KING OF CLUBS 165-5000-44-HF	#555 Clear LP. # 45 SPIN A CARD 165-5002-00	#555 Clear LP. # 46 EJECT CHIP TRICK 165-5002-00	#555 Clear LP. # 47 BAHAMAS 165-5002-00	#555 Clear LP. # 48 PARIS 165-5002-00
07 Q39 GROUND RED-VIO J12-P8	#44 Clear LP. # 49 NINE OF SPADES 165-5000-44-HF	#44 Clear LP. # 50 KING OF HEARTS 165-5000-44-HF	#44 Clear LP. # 51 NINE OF DIAMONDS 165-5000-44-HF	#44 Clear LP. # 52 JACK OF SPADES 165-5000-44-HF	#555 Clear LP. # 53 LEFT ORBIT ARROW 165-5002-00	#555 Clear LP. # 54 LEFT ORBIT CHIP TRICK 165-5002-00	#555 Clear LP. # 55 ATLANTIC CITY 165-5002-00	#555 Clear LP. # 56 LAS VEGAS 165-5002-00
08 Q40 GROUND RED-GRY J12-P9	#44 Clear LP. # 57 KING OF DIAMONDS 165-5000-44-HF	#44 Clear LP. # 58 SEVEN OF SPADES 165-5000-44-HF	#44 Clear LP. # 59 QUEEN OF CLUBS 165-5000-44-HF	#44 Clear LP. # 60 KING OF SPADES 165-5000-44-HF	#555 Clear LP. # 61 RIGHT ORBIT ARROW 165-5002-00	Lamp Note 1 LP. # 62 LEFT BUMPER « D.O.T.S. » 112-5024-08	#555 Clear LP. # 63 STEAL THE BLIND 165-5002-00	#555 Clear LP. # 64 A CHIP AND A CHAIR 165-5002-00
09 Q41 GROUND RED-WHT J12-P10	#555 Clear LP. # 65 LEFT VUK ARROW 165-5002-00	#555 Clear LP. # 66 CUT THE CARDS 165-5002-00	#44 Blue LP. # 67 POP STANDUP #1 (L) 165-5053-05-HF	#44 Blue LP. # 68 POP STANDUP #2 165-5053-05-HF	#555 Clear LP. # 69 RIGHT ORBIT CHIP TRICK 165-5002-00	Lamp Note 1 LP. # 70 RIGHT BUMPER « D.O.T.S. » 112-5024-08	#555 Clear LP. # 71 PLAY THE BUTTON 165-5002-00	#555 Clear LP. # 72 SPOT THE TELL 165-5002-00
10 Q42 GROUND RED J12-P11	#555 Clear LP. # 73 LEFT VUK LOCK 165-5002-00	#555 Clear LP. # 74 EXTRA BALL 165-5002-00	#44 Blue LP. # 75 POP STANDUP #3 165-5053-05-HF	#44 Blue LP. # 76 POP STANDUP #4 (R) 165-5053-05-HF	LP. # 77 NOT USED	Lamp Note 1 LP. # 78 BOTTOM BUMPER « D.O.T.S. » 112-5024-08	#555 Clear LP. # 79 KNOW YOUR OUTS 165-5002-00	#555 Clear LP. # 80 CHANGE GEARS 165-5002-00

Wire Color Abbreviations used: BLK Black | BLU Blue | BRN Brown | GRY Gray | GRN Green | ORG Orange | RED Red | VIO Violet | WHT White | YEL Yellow

Lamp Note 1 = White LED Module (Wedge Base #555 Style) 112-5024-08

Find-It-In-Front: Dr. Pinball

WPT™ WORLD POKER TOUR

DR. 6

LAMP MENU: ONE, ALL, ROW, COLUMN & ORDERED

LAMP LOCATIONS

{Lamp Matrix Grid (01-80) on the previous page}

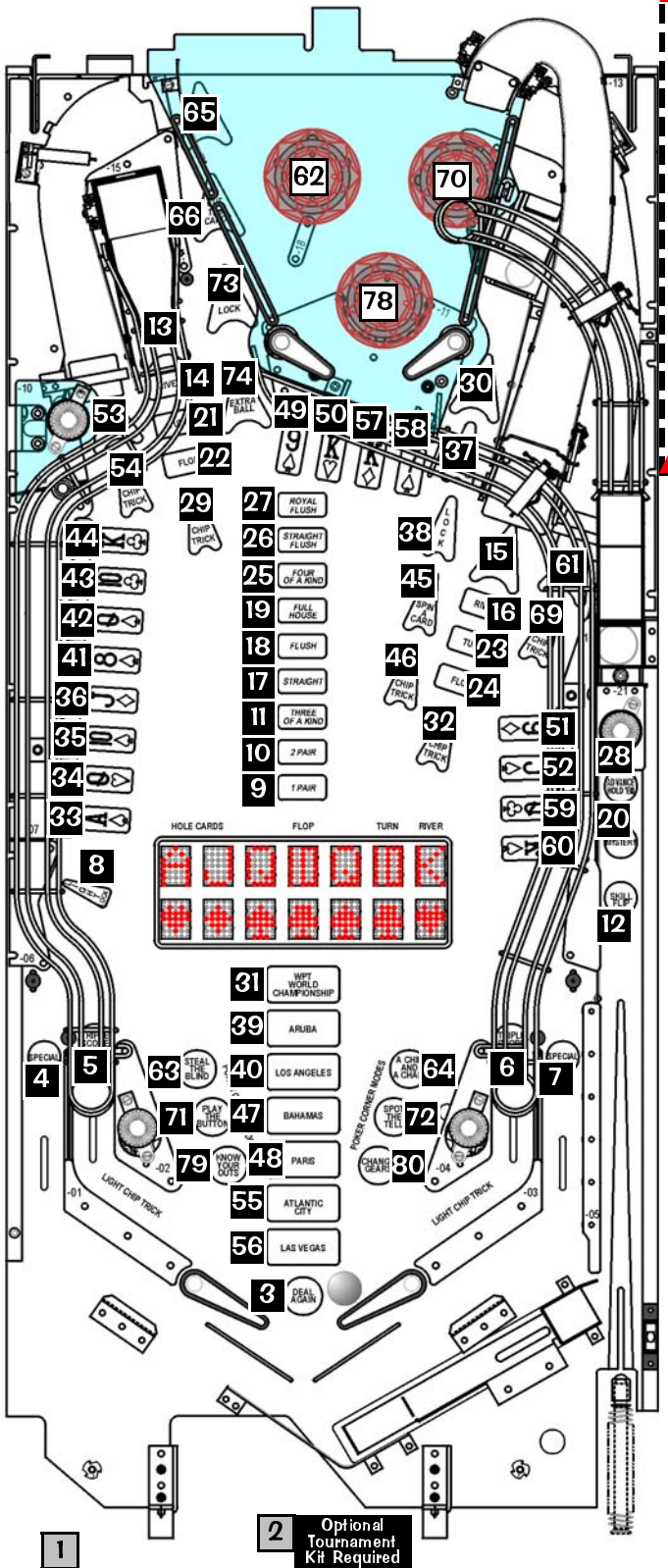

Typical Lamp Schematic & Wiring

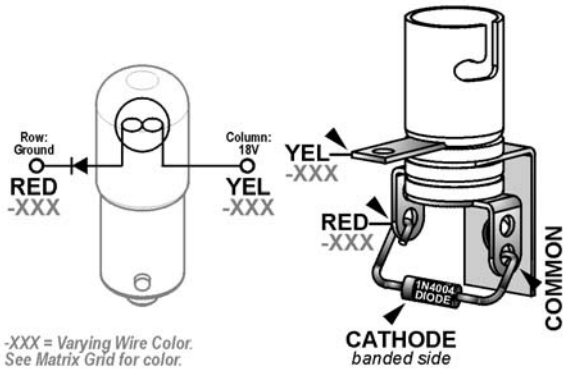

◀ Playfield | Back Panel ▼

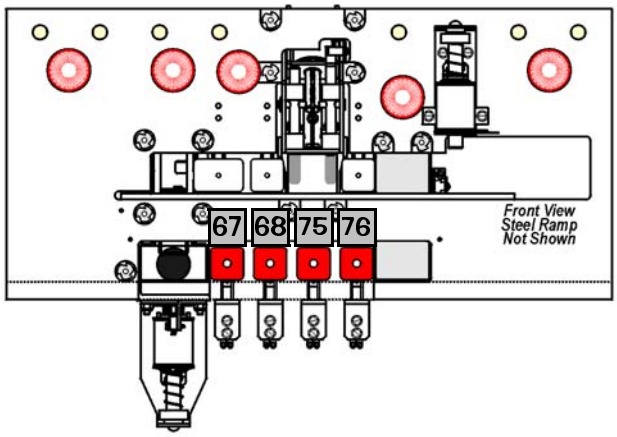

= Lamps above Playfield.
= Lamps below Playfield.
= Lamps in Cabinet & on Back Panel.

Lamp Part Notes: *#555 Wedge Base (W.B.) Bulb Clear = 165-5002-00.*
#44 Bayonet Bulb (Heavy Filament) Clear = 165-5000-44-HF.
#555 LED Wedge Base White = 112-5024-08
*See Section **4**, Chapter **1**, **Parts Identification & Location**,*
*Pages **78-80** for more details on bulbs and corresponding sockets.*
***Some Lamp Diodes may be located under the playfield, in the Cabinet** or **Backbox** on Terminal Strips and not on or with the Lamp Socket.*

DOTS: **D**iode **O**n **T**erminal **S**trip, *see Sec. **5**, Chp. **2**, **Playfield Wiring**.*

DR. Find-It-In-Front: Dr. Pinball

WORLD POKER TOUR™

COILS DETAILED CHART TABLE

	High Current Coils Group 1	Drive Transistor	Driver Ouput Board	Power Line Color	Power Line Connection	Power Voltage	Drive Transistor Control Line Color	D.T. Control Line Connect	Coil GA-Turn or Bulb Type
#1	TROUGH UP-KICKER	Q1	▲ I/O Power Driver ▼	YEL-VIO	J10-P9/10	50v DC	BRN-BLK	J8-P1	26-1200 ↻ 090-5044-ND
#2	AUTO LAUNCH	Q2		YEL-VIO	J10-P9/10	50v DC	BRN-RED	J8-P3	23-800 ↻ 090-5001-ND
#3	SHOOTER LANE VUK	Q3		YEL-VIO	J10-P9/10	50v DC	BRN-ORG	J8-P4	26-1200 ↻ 090-5044-ND
#4	LEFT VUK	Q4		YEL-VIO	J10-P9/10	50v DC	BRN-YEL	J8-P5	26-1200 ↻ 090-5044-ND
#5	LOWER LEFT DROP RESET	Q5		YEL-VIO	J10-P9/10	50v DC	BRN-GRN	J8-P6	23-800 ↻ 090-5001-ND
#6	UPPER LEFT DROP RESET	Q6		YEL-VIO	J10-P9/10	50v DC	BRN-BLU	J8-P7	23-800 ↻ 090-5001-ND
#7	MIDDLE DROP RESET	Q7		YEL-VIO	J10-P9/10	50v DC	BRN-VIO	J8-P8	23-800 ↻ 090-5001-ND
#8	RIGHT DROP RESET	Q8		YEL-VIO	J10-P9/10	50v DC	BRN-GRY	J8-P9	23-800 ↻ 090-5001-ND

	High Current Coils Group 2	Drive Transistor	Driver Ouput Board	Power Line Color	Power Line Connection	Power Voltage	Drive Transistor Control Line Color	D.T. Control Line Connect	Coil GA-Turn or Bulb Type
#9	LEFT BUMPER	Q9	▲ I/O Power Driver ▼	YEL-VIO	J10-P9/10	50v DC	BLU-BRN	J9-P1	26-1200 ↻ 090-5044-ND
#10	RIGHT BUMPER	Q10		YEL-VIO	J10-P9/10	50v DC	BLU-RED	J9-P2	26-1200 ↻ 090-5044-ND
#11	BOTTOM BUMPER	Q11		YEL-VIO	J10-P9/10	50v DC	BLU-ORG	J9-P4	26-1200 ↻ 090-5044-ND
#12	JAIL UP	Q12		YEL-VIO	J10-P9/10	50v DC	BLU-YEL	J9-P5	26-1200 ↻ 090-5044-ND-NL
#13	UPPER PF LEFT FLIPPER	Q13		GRY-YEL~3A Fuse~RED-YEL	J10-P6/7	50v DC	BLU-GRN	J9-P6	23-1100 ↻ 090-5030-ND
#14	UPPER PF RIGHT FLIPPER	Q14		BLU-YEL~3A Fuse~RED-YEL	J10-P6/7	50v DC	BLU-BLK	J9-P7	23-1100 ↻ 090-5030-ND
#15	LEFT FLIPPER (50v RED/YEL)	Q15		GRY-YEL~3A Fuse~RED-YEL	J10-P6/7	50v DC	ORG-GRY	J9-P8	22-1080 ↻ 090-5032-ND
#16	RIGHT FLIPPER (50v RED/YEL)	Q16		BLU-YEL~3A Fuse~RED-YEL	J10-P6/7	50v DC	ORG-VIO	J9-P9	22-1080 ↻ 090-5032-ND

	Low Current Coils Group 1	Drive Transistor	Driver Ouput Board	Power Line Color	Power Line Connection	Power Voltage	Drive Transistor Control Line Color	D.T. Control Line Connect	Coil GA-Turn or Bulb Type
#17	LEFT SLINGSHOT	Q17	▲ I/O Power Driver ▼	BROWN	J7-P1	20v DC	VIO-BRN	J7-P2	23-800 ↻ 090-5001-ND
#18	RIGHT SLINGSHOT	Q18		BROWN	J7-P1	20v DC	VIO-RED	J7-P3	23-800 ↻ 090-5001-ND
#19	JAIL LATCH [MINI-COIL]	Q19		BROWN	J7-P1	20v DC	VIO-ORG	J7-P4	27-880 ↻ 090-5072-05
#20	LEFT RAMP UP POST	Q20		BROWN	J7-P1	20v DC	VIO-YEL	J7-P6	25-1240 ↻ 090-5034-ND
#21	BUMPER EJECT	Q21		YEL-VIO	J10-P9/10	50v DC	WHITE </> VIO-GRN	J7-P7	26-1200 ↻ 090-5044-ND

*For a wiring diagram, see Sec. **5**, Chp. **1**. For the Step-Up Driver PCB (520-5254-00) Schematic, see Sec. **5**, Chp. **4**, **Q21 50V Step-Up Driver Board Schematic**.*

#22	FLASH: LEFT SLINGSHOT	Q22	▲ I/O Power Driver ▼	ORANGE	J6-P10	20v DC	VIO-BLU	J7-P8	#89 Bulb 165-5000-89
#23	FLASH: RIGHT SLINGSHOT	Q23		ORANGE	J6-P10	20v DC	VIO-BLK	J7-P9	#89 Bulb 165-5000-89
#24	OPTIONAL COIL	Q24		RED	J16-P4>8	5v DC	VIO-GRY	J7-P10	Opt. 5v

D iode O n T erminal S trip (if noted)

	Low Current Coils Group 2	Drive Transistor	Driver Ouput Board	Power Line Color	Power Line Connection	Power Voltage	Drive Transistor Control Line Color	D.T. Control Line Connect	Coil GA-Turn or Bulb Type
#25	FLASH: LEFT SPINNER	Q25	▲ I/O Power Driver ▼	ORANGE	J6-P10	20v DC	BLK-BRN	J6-P1	#89 Bulb 165-5000-89
#26	FLASH: BACKPANEL #1 (L)	Q26		ORANGE	J6-P10	20v DC	BLK-RED	J6-P2	#89 Bulb 165-5000-89
#27	FLASH: BACKPANEL #2	Q27		ORANGE	J6-P10	20v DC	BLK-ORG	J6-P3	#89 Bulb 165-5000-89
#28	FLASH: BACKPANEL #3	Q28		ORANGE	J6-P10	20v DC	BLK-YEL	J6-P4	#89 Bulb 165-5000-89
#29	FLASH: BACKPANEL #4	Q29		ORANGE	J6-P10	20v DC	BLK-GRN	J6-P5	#89 Bulb 165-5000-89
#30	FLASH: BACKPANEL #5 (R)	Q30		ORANGE	J6-P10	20v DC	BLK-BLU	J6-P6	#89 Bulb 165-5000-89
#31	FLASH: RIGHT VUK	Q31		ORANGE	J6-P10	20v DC	BLK-VIO	J6-P7	#89 Bulb 165-5000-89
#32	RIGHT RAMP DOWN POST	Q32		BROWN	J7-P1	20v DC	BLK-GRY	J6-P8	26-1200 ↻ 090-5044-ND

Note: In Test Flash Lamps Menu ("Flash" Icon), Flashers tested are all Flash Lamps located between Q1-Q32 (This Game: Q22-Q23 & Q25-Q31)

WPT™ WORLD POKER TOUR

Find-It-In-Front: Dr. Pinball DR.

COIL MENU: SINGLE COIL & CYCLING COIL

COIL & FLASH LAMP LOCATIONS

{Coils Detailed Chart Table on the previous page}

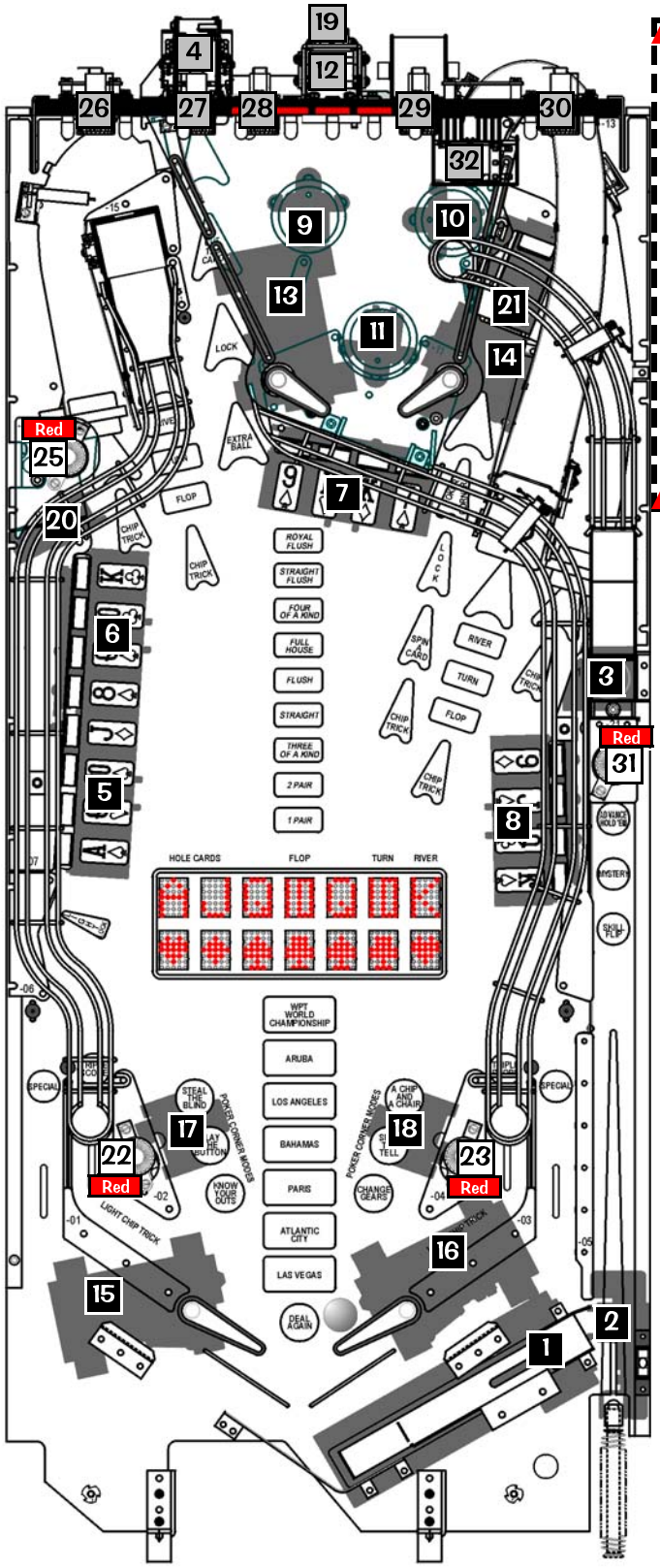

Typical Coil Wiring & Schematic

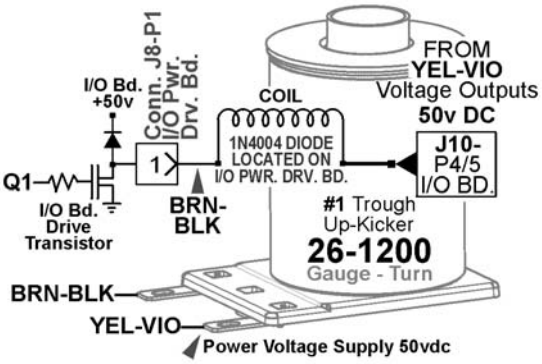

◀ Playfield | Back Panel ▼

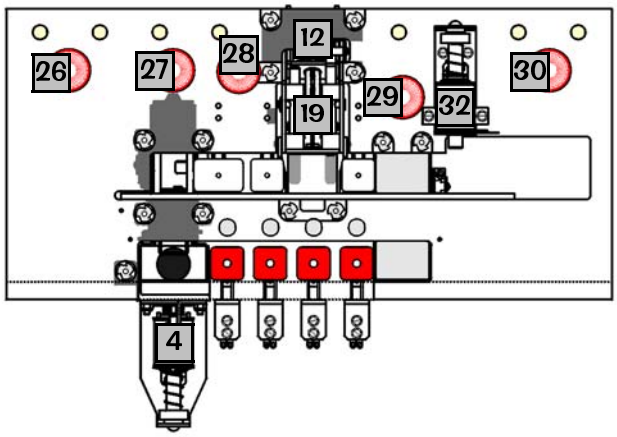

= Coils / Flash Lamps above Playfield.

= Coils / Flash Lamps below Playfield.

= Coils / Flash Lamps on Back Panel.

Color = Color of Mini-Mars or Flash Lamp Bulb.

Some Coil or Flash Lamp Diodes may be located under the playfield, in the Cabinet or Backbox *on Terminal Strips* ***or*** *Diode Boards and not on the assemblies.*

Coil Q24 is Optional. *If either a Coin Meter, Token Dispenser or Knocker (all optional equipment) is required, call Technical Support for more information, 1-800-542-5377 or 1-708-345-7700.*

DOTS: **D**iode **O**n **T**erminal **S**trip, *see Sec.* ***5****, Chp.* ***2****,* ***Playfield Wiring****.*

STANDARD ADJUSTMENT 1

GO TO ADJUSTMENTS MENU: STANDARD ADJUSTMENTS [#1 - #61]

Peform the below steps to review the adjustments. Enter the **SERVICE MENU**, then enter the **STANDARD ADJUSTMENTS MENU**. *For adjustment definitions or summary, review Section **3**, Chapter **4**, **GO TO ADJUSTMENTS MENU**. See Section **3**, Chapter **5**, **GO TO INSTALLS MENU** (via the **UTILITIES MENU**), to easily change all adjustments required depending on the Install Type (Easy, Hard, 5-Ball, Home Play, etc.) desired.*

Step 1 Press **[SELECT]**. Press **[BACK]** to exit or escape at any time.

Step 2 Press **[>]**. Go to the "ADJ" *Icon.* Press **[SELECT]**.

Step 3 ... "S.P.I." *Icon.* Press **[SELECT]**.

Adjustment Number
Adjustment Name
Adjustment Setting
Adjustment Comment

Step 4 **STANDARD ADJUSTMENT #1** appears with the Adjustment Name **[REPLAY TYPE]** flashing. With the Adjustment Name flashing, press **[<] [>]** to move between adjustments.

Step 5: To change the Adjustment Setting, press **[SELECT]**. With the Adjustment Setting flashing, press **[<] [>]** repeatedly until the desired setting appears. Press the **[SELECT]** to "install" the change. The Adjustment Comment *(bottom text line)* will indicate **[INSTALLED/FACTORY DEFAULT]**, if the Factory Default Settinfsg is selected *or* **[INSTALLED]** if the change is not the Factory Default Setting.

STANDARD ADJUSTMENTS [#1 - #61] ▼

Nr.	STANDARD ADJUSTMENT NAME	USA DEFAULT	YOUR SETTING
1	REPLAY TYPE	AUTO	
2	‡ REPLAY PERCENTAGE	10%	
3	‡ REPLAY AWARD	CREDIT	
4	‡ REPLAY LEVELS	1	
5	‡ AUTO REPLAY START	20,000,000	
6	‡ DYNAMIC REPLAY START	60,000,000	
7	‡ REPLAY LEVEL #1	15,000,000	
8	‡ REPLAY LEVEL #2	30,000,000	
9	‡ REPLAY LEVEL #3	45,000,000	
10	‡ REPLAY LEVEL #4	60,000,000	
11	‡ REPLAY BOOST	YES	
12	SPECIAL LIMIT	1	
13	‡ SPECIAL PERCENTAGE	10%	
14	SPECIAL AWARD	CREDIT	
15	FREE GAME LIMIT	5	
16	EXTRA BALL LIMIT	5	
17	‡ EXTRA BALL PERCENTAGE	25%	
18	GAME PRICING	USA 5	
19	MATCH PERCENTAGE	9%	
20	MATCH AWARD	CREDIT	
21	BALLS PER GAME	3	
22	TILT WARNINGS	2	
23	CREDIT LIMIT	30	
24	ALLOW HIGH SCORES	YES	
25	HIGH SCORE AWARD	CREDIT	
26	GRAND CHAMPION AWARDS	1	
27	HIGH SCORE #1 AWARDS	1	
28	HIGH SCORE #2 AWARDS	0	
29	HIGH SCORE #3 AWARDS	0	
30	HIGH SCORE #4 AWARDS	0	

Nr.	STANDARD ADJUSTMENT NAME	USA DEFAULT	YOUR SETTING
31	GRAND CHAMPION SCORE	75,000,000	
32	HIGH SCORE #1	55,000,000	
33	HIGH SCORE #2	40,000,000	
34	HIGH SCORE #3	30,000,000	
35	HIGH SCORE #4	25,000,000	
36	HSTD INITIALS	3 INITIALS	
37	HSTD RESET COUNT	2000	
38	FREE PLAY	NO	
39	LANGUAGE	ENGLISH	
40	CUSTOM MESSAGE	ON	
41	FLASH LAMP POWER	NORMAL	
42	COIL PULSE POWER	NORMAL	
43	KNOCKER VOLUME	NORMAL	
44	GAME RESTART	YES	
45	BILL VALIDATOR	NO	
46	MUSIC VOLUME	1	
47	BALL SAVE TIME	0:05	
48	TIMED PLUNGER	OFF	
49	FLIPPER BALL LAUNCH	OFF	
50	COINDOOR BALL SAVER	NO	
51	COMPETITION MODE	NO	
52	CONSOLATION BALL	YES	
53	FAST BOOT	YES	
54	Q24 OPTION	COIN METER	
55	TICKET DISPENSER	NO	
56	PLAYER COMPETITION	YES	
57	TECH ALERT WARNING	NEVER	
58	TEAM SCORES	NO	
59	LOCATION ID	0	
60	GAME ID	0	
61	TIME FORMAT	12-HOUR	

Factory Defaults Settings are subject to change during production *(especially Standard Adjustments 2, 4, 5, 13, 16-17, 19, 31-35 & 47).*
‡ Not all Standard Adjustments are shown. Depending on the setting (whether Factory Default or if changed by the operator), associated adjustments do not appear, if not required. ***Note:*** *If **Game Dip Switch** other than USA is installed, different Defaults will appear.*

GO TO ADJUSTMENTS MENU: FEATURE ADJUSTMENTS [#1 - #44]

Peform the below steps to review the adjustments. Enter the **SERVICE MENU**, then enter the **FEATURE ADJUSTMENTS MENU**. *For adjustment definitions or summary, review Section **3**, Chapter **4**, **GO TO ADJUSTMENTS MENU**. See Section **3**, Chapter **5**, **GO TO INSTALLS MENU** (via the **UTILITIES MENU**), to easily change all adjustments required depending on the Install Type (Easy, Hard, 5-Ball, Home Play, etc.) desired.*

Step 1 Press **[SELECT]**. Press **[BACK]** to exit or escape at any time.

Step 2 Press **[>]**. Go to the "ADJ" *Icon.* Press **[SELECT]**.

Step 3 Press **[>]**. Go to the "WPT" *Icon.* Press **[SELECT]**.

Step 4 **FEATURE ADJUSTMENT #1** appears with the Adjustment Name **[CITY ADVANCE DIFFICULTY]** flashing. With the Adjustment Name flashing, press **[<] [>]** to move between adjustments.

Step 5: To change the Adjustment Setting, press **[SELECT]**. With the Adjustment Setting flashing, press **[<] [>]** repeatedly until the desired setting appears. Press the **[SELECT]** to "install" the change. The Adjustment Comment *(bottom text line)* will indicate **[INSTALLED/FACTORY DEFAULT]**, if the Factory Default Setting is selected *or* **[INSTALLED]** if the change is not the Factory Default Setting.

FEATURE ADJUSTMENTS [#1 - #44] ▼

Nr.	FEATURE ADJUSTMENT NAME	USA DEFAULT	YOUR SETTING
1	CITY ADVANCE DIFFICULTY	MEDIUM	
2	CITIES FOR EXTRA BALL	2	
3	MAX. CITY EXTRA BALLS	5	
4	CITY EXTRA BALL MEMORY	YES	
5	ACE/HOLE DIFFICULTY	MEDIUM	
6	ACE/HOLE MB DIFFICULTY	MEDIUM	
7	FIRST HARD SUPER TRICK	2	
8	COMBO EXTRA BALL MEMORY	NO	
9	MYSTERY DIFFICULTY	MEDIUM	
10	MYSTERY EXTRA BALL MEMORY	NO	
11	MYSTERY SPECIAL MEMORY	NO	
12	NO LIMIT MB LOCK DIFF	MEDIUM	
13	SPIN-A-CARD DIFF	MEDIUM	
14	EASY SIDE POT SHOTS	5	
15	FIRST SIDE POT EXTRA BALL	10	
16	ADD'L SIDE POT EXTRA BALL	50	
17	MAX. SIDE POT EXTRA BALLS	5	
18	SIDE POT EXTRA BALL MEMORY	YES	
19	ALL-IN MB DIFF	MEDIUM	
20	HURRYUP AWARD INTERVAL	2	
21	FIRST HURRYUP EXTRA BALL	5	
22	ADD'L HURRYUP EXTRA BALLS	25	

Nr.	FEATURE ADJUSTMENT NAME	USA DEFAULT	YOUR SETTING
23	MAX. HURRYUP EXTRA BALLS	5	
24	HURRYUP EXTRA BALL MEMORY	YES	
25	POKER HAND MB DIFF	MEDIUM	
26	POKER HAND MB SPECIAL MEM...	NO	
27	POKER CORNER DIFF	HARD	
28	BLIND SHOTS FOR TROPHY	2	
29	BUTTON SHOTS FOR TROPHY	3	
30	OUTS DROPS FOR TROPHY	16	
31	CHIP DROPS FOR TROPHY	20	
32	TELL SHOTS FOR TROPHY	2	
33	GEAR SHOTS FOR TROPHY	8	
34	SHOW UPPER FLIPPERS	YES	
35	FLOP AND TURN POSTS	YES	
36	MULTIBALL POSTS	YES	
37	DISABLE JAIL	NO	
38	DISABLE CARD DISPLAY	NO	
39	DISABLE LL DROP BANK	NO	
40	DISABLE UL DROP BANK	NO	
41	DISABLE MID DROP BANK	NO	
42	DISABLE RIGHT DROP BANK	NO	
43	DISABLE LEFT POST	NO	
44	DISABLE RIGHT POST	NO	

Factory Defaults Settings are subject to change during production
Note: *If **Game Dip Switch** other than USA is installed, different Defaults may appear.*

GO TO AUDITS MENU: EARNINGS AUDITS [#1 - #13] / STANDARD AUDITS [#1 - #59]

Perform the below steps to review the audits. Enter the **SERVICE MENU**, then enter the **EARNINGS AUDITS** *or* **STANDARD AUDITS MENUS**. *For audit definitions or summary, review Section **3**, Chapter **3**, **GO TO AUDITS MENU**. **Coming Soon!** Audits / pertinent game data can be downloaded from the* **USB MENU** *(via the **UTILITIES MENU**),* select the "DUMP" *Icon. See Section **3**, Chp. **5**, **GO TO UTILITIES MENU**, for more information.*

Step 1 Press **[SELECT]**. Press **[BACK]** to exit or escape at any time.

Step 2 Press **[>]**. Go to the "AUD" *Icon.* Press **[SELECT]**.

Step 3 Press **[>]**. Go to the "EARN" *or* "S.P.I." *Icon.* Press **[SELECT]**.

Step 4 Press **[<] [>]** to move between audits.

EARNINGS AUDITS [#1 - #13] ▼

Nr.	EARNINGS AUDIT NAME	YOUR RESULT
01	TOTAL PAID CREDITS	
02	FREE GAME PERCENTAGE	
03	AVERAGE BALL TIME	
04	AVERAGE GAME TIME	
05	COINS THROUGH LEFT SLOT	
06	COINS THROUGH RIGHT SLOT	
07	COINS THROUGH CENTER SLOT	

Nr.	EARNINGS AUDIT NAME	YOUR RESULT
08	COINS THROUGH FOURTH SLOT	
09	COINS THROUGH FIFTHTH SLOT	
10	TOTAL COINS	
11	TOTAL EARNINGS	
12	METER CLICKS	
13	SOFTWARE METER	

STANDARD AUDITS [#1 - #59] ▼

Nr.	STANDARD AUDIT NAME	YOUR RESULT
01	TOTAL BALLS PLAYED	
02	TOTAL EXTRA BALLS	
03	EXTRA BALL PERCENTAGE	
04	REPLAY 1 AWARDS	
05	REPLAY 2 AWARDS	
06	REPLAY 3 AWARDS	
07	REPLAY 4 AWARDS	
08	TOTAL REPLAYS	
09	REPLAY PERCENTAGE	
10	TOTAL SPECIALS	
11	SPECIAL PERCENTAGE	
12	TOTAL MATCHES	
13	HIGH SCORE AWARDS	
14	HIGH SCORE PERCENT	
15	TOTAL FREE PLAYS	
16	TOTAL PLAYS	
17	0.0M – 1.99M SCORES	
18	2.0M – 3.99M SCORES	
19	4.0M – 5.99M SCORES	
20	6.0M – 7.99M SCORES	

Nr.	STANDARD AUDIT NAME	YOUR RESULT
21	8.0M – 9.99M SCORES	
22	10.0M – 12.49M SCORES	
23	12.5M – 14.99M SCORES	
24	15.0M – 17.49M SCORES	
25	17.5M – 19.99M SCORES	
26	20.0M – 24.99M SCORES	
27	25.0M – 29.99M SCORES	
28	30.0M – 39.99M SCORES	
29	40.0M – 49.99M SCORES	
30	50.0M – 74.99M SCORES	
31	75.0M – 99.99M SCORES	
32	100.0M – 149.99M SCORES	
33	150.0M+ SCORES	
34	AVERAGE SCORES	
35	SERVICE CREDITS	
36	BALL SEARCH STARTED	
37	LOST BALL FEEDS	
38	LOST BALL GAME STARTS	
39	LEFT DRAINS	
40	CENTER DRAINS	

Nr.	STANDARD AUDIT NAME	YOUR RESULT
41	RIGHT DRAINS	
42	TILTS	
43	TOTAL BALLS SAVED	
44	LEFT FLIPPER USED	
45	RIGHT FLIPPER USED	
46	0 – 1 MINUTE GAMES	
47	1 – 1.5 MINUTE GAMES	
48	1.5 – 2 MINUTE GAMES	
49	2 – 2.5 MINUTE GAMES	
50	2.5 – 3 MINUTE GAMES	
51	3 – 3.5 MINUTE GAMES	
52	3.5 – 4 MINUTE GAMES	
53	4 – 5 MINUTE GAMES	
54	5 – 6 MINUTE GAMES	
55	6 – 8 MINUTE GAMES	
56	8 – 10 MINUTE GAMES	
57	10 – 15 MINUTE GAMES	
58	15+ MINUTE GAMES	
59	RECENT REPLAY PERCENT	

Note: *Audits are subject to change (with or without notice).*

FEATURE AUDIT 1

GO TO AUDITS MENU: FEATURE AUDITS [#1 - #164]

Perform the below steps to review the audits. Enter the **SERVICE MENU**, then enter the **FEATURE AUDITS MENU**. *For Tournament Audit definitions and table, review Section **3**, Chapter **6**, **GO TO TOURNAMENTS MENU**.*

Step 1 Press **[SELECT]**. Press [BACK] to exit or escape at any time.

Step 2 Press [>]. Go to the "AUD" *Icon.* Press **[SELECT]**.

Step 3 Press [>]. Go to the "WPT" *Icon.* Press **[SELECT]**.

Step 4 Press [<] [>] to move between audits.

Audit Number
Audit Name
Audit Result

FEATURE AUDITS [#1 - #164] ▼

Nr.	FEATURE AUDIT NAME	YOUR RESULT
01	LEFT OUTLANES	
02	LEFT INLANES	
03	LEFT SLINGSHOTS	
04	RT SLINGSHOTS	
05	RIGHT INLANES	
06	RIGHT OUTLANES	
07	LEFT REBOUND	
08	LIGHT LOCK TRGT	
09	RIGHT REBOUND	
10	LEFT ORBITS	
11	LOOPING LT ORBIT	
12	LEFT RAMPS	
13	LEFT VUKS	
14	POP EJECT SHOTS	
15	POP EJECT R'BCKS	
16	RIGHT RAMPS	
17	RIGHT ORBITS	
18	LEFT BANK DROPS	
19	MID BANK DROPS	
20	RT BANK DROPS	
21	LT SPINNER SPINS	
22	RT SPINNER SPINS	
23	POP HITS	
24	TRIPLE POP HITS	
25	POP STANDUPS	
26	POP S-U COMPLTD	
27	UPF LEFT LANE	
28	UPF STANDUPS	
29	UPF JAIL BASH	
30	UPF JAIL HOLE	
31	UPF SCOOPS	
32	UPF RIGHT RAMPS	
33	UPF DRAINS	
34	SKL SHOT STARTS	
35	SS - HOLDEM	
36	SS - MYSTERY	
37	SS - SKILL FLIP	
38	FLIP SHOT MADE	
39	UPF HURRYUPS ...	
40	HUPS... INCREASED	
41	HUPS...AWARDED	

Nr.	FEATURE AUDIT NAME	YOUR RESULT
42	HUPS...DRAINED	
43	JAIL BAR HITS	
44	JAIL BAR RAISED	
45	J'L BALLS LOCKED	
46	JAIL BALL HITS	
47	A/H MB STARTED	
48	A/H MB +2 STARTED	
49	A/H BAR HITS	
50	A/H BARS RAISED	
51	A/H BALLS LOCKED	
52	A/H INSTNT LOCKS	
53	A/H BALL HITS	
54	A/H BALL RELEASES	
55	A/H AUTO R'LEASES	
56	A/H JACKPOTS	
57	A/H 3X JACKPOTS	
58	A/H SUPER JP LIT	
59	A/H SUPER JPS	
60	A/H TOTAL POINTS	
61	HLDEM DEALT FLOP	
62	HLDEM DEALT TURN	
63	HLDM DEALT RIVER	
64	HLDEM - HIGH CARD	
65	HOLDEM - 1 PAIR	
66	HOLDEM - 2 PAIR	
67	HOLDEM - 3/KIND	
68	HLDEM - STRAIGHT	
69	HOLDEM - FLUSH	
70	HLDM - FULL HOUSE	
71	HOLDEM - 4/KIND	
72	HLDEM - STR FLUSH	
73	HLDM - ROYAL FLSH	
74	EARNED 1 CITY	
75	EARNED 2 CITIES	
76	EARNED 3 CITIES	
77	EARNED 4 CITIES	
78	EARNED 5 CITIES	
79	EARNED 6 CITIES	
80	WPT CHAMPIONSHIP	
81	ALL-IN MB STARTS	
82	ALL-IN MB 2+ STRTS	

Nr.	FEATURE AUDIT NAME	YOUR RESULT
83	PKR HAND CARDS	
84	SHARPSHTR CARDS	
85	PkR HAND - 1 PAIR	
86	HAND - 2 PAIR	
87	HAND - 3/KIND	
88	HAND - STRAIGHT	
89	HAND - FLUSH	
90	HAND - FULL HOUSE	
91	HAND - 4/KIND	
92	HAND - STR FLUSH	
93	HAND - ROYAL FLSH	
94	HAND MB STARTS	
95	HAND MB 2+ STARTS	
96	PHMB 1X JACKPOTS	
97	PHMB 2X JACKPOTS	
98	PHMB 3X JACKPOTS	
99	PHMB 6X JACKPOTS	
100	PHMB 9X JACKPOTS	
101	PHMB SUPER JP LIT	
102	PHMB SUPER JPS	
103	PHMB 3X SPR JPS	
104	PHMB TOTAL PNTS	
105	NL MB LOCKS LIT	
106	NL MB LOCK 1	
107	NL MB LOCK 2	
108	NL MB STARTS	
109	NL MB 2+ STARTS	
110	NLMB 1X J'POT LIT	
111	NLMB 2X J'POT LIT	
112	NLMB 3X J'POT LIT	
113	NLMB J'POT INCRSD	
114	NLMB DRPS CMPLTD	
115	NLMB 1X JACKPOTS	
116	NLMB 2X JACKPOTS	
117	NLMB 3X JACKPOTS	
118	NLMB 6X JACKPOTS	
119	NLMB 9X JACKPOTS	
120	NLMB TTL POINTS	
121	SIDE POTS	
122	SPIN-A-CARD LIT	
123	SPN-A-CRD CLCTD	

Nr.	FEATURE AUDIT NAME	YOUR RESULT
124	CHIP TRICKS	
125	UNQ CHIP TRICKS	
126	CHIP TRCK TOTAL X	
127	CHP TRCKS CMPLTD	
128	POKER CORNER LIT	
129	BLINDS STARTED	
130	BLINDS - SM BLINDS	
131	BLNDS - BIG BLINDS	
132	BLINDS TROPHIES	
133	BLINDS TOTAL PNTS	
134	P.T. BTTN STARTED	
135	BTN - BTN SHOTS	
136	BTN - OTHER SHOTS	
134	BTN - TROPHIES	
135	BTN - TOTAL POINTS	
136	KNOW YOUR OUTS	
140	OUTS - DROPS HIT	
141	OUTS - DROPS CMP	
142	OUTS TROPHIES	
143	OUTS TOTAL PNTS	
144	CHIP & A CHAIR STR	
145	CHIPS - DROPS HIT	
146	CHIPS TROPHIES	
147	CHIPS TOTAL PNTS	
148	CHNGE GEARS STR	
149	- LOW GEAR SHOTS	
150	- HIGH GEAR SHOTS	
151	GEARS TROPHIES	
152	GEARS TOTAL PNTS	
153	SPOT THE TELL STR	
154	TELL - SPOTTED	
155	TELL - MISSED	
156	TELL TROPHIES	
157	TELL TOTAL POINTS	
158	P.C. WIZARD MODE	
159	MYSTERY LIT	
160	MYSTERY CLLCTD	
161	X3 SCORING LIT	
162	X3 SCORING STRTD	
163	BONUS X ADV	
164	BONUS X MAX AWD	

Note: *Audits are subject to change (with or without notice).*

Domestic Pinball & Redemption Distributors Map

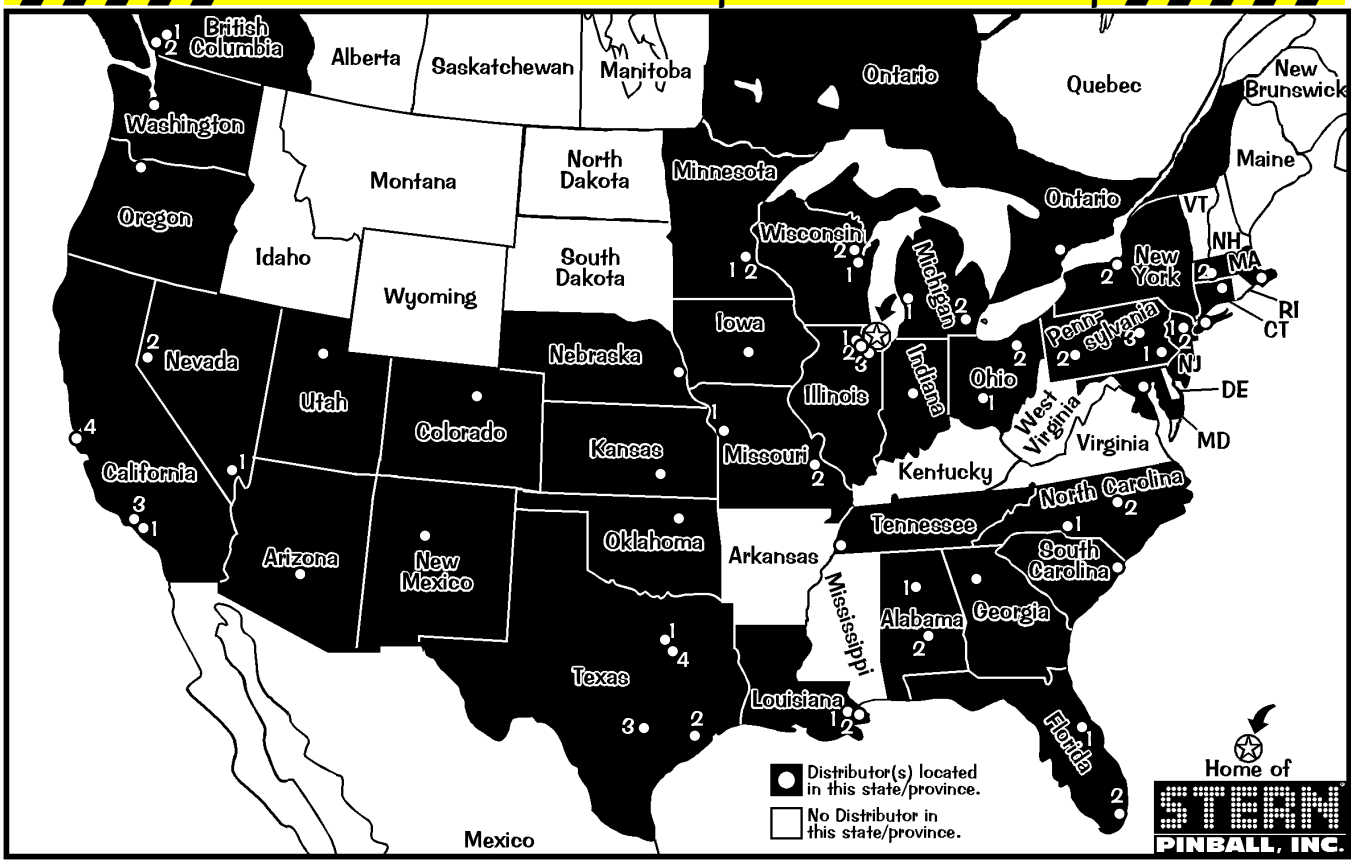

International Distributors Map

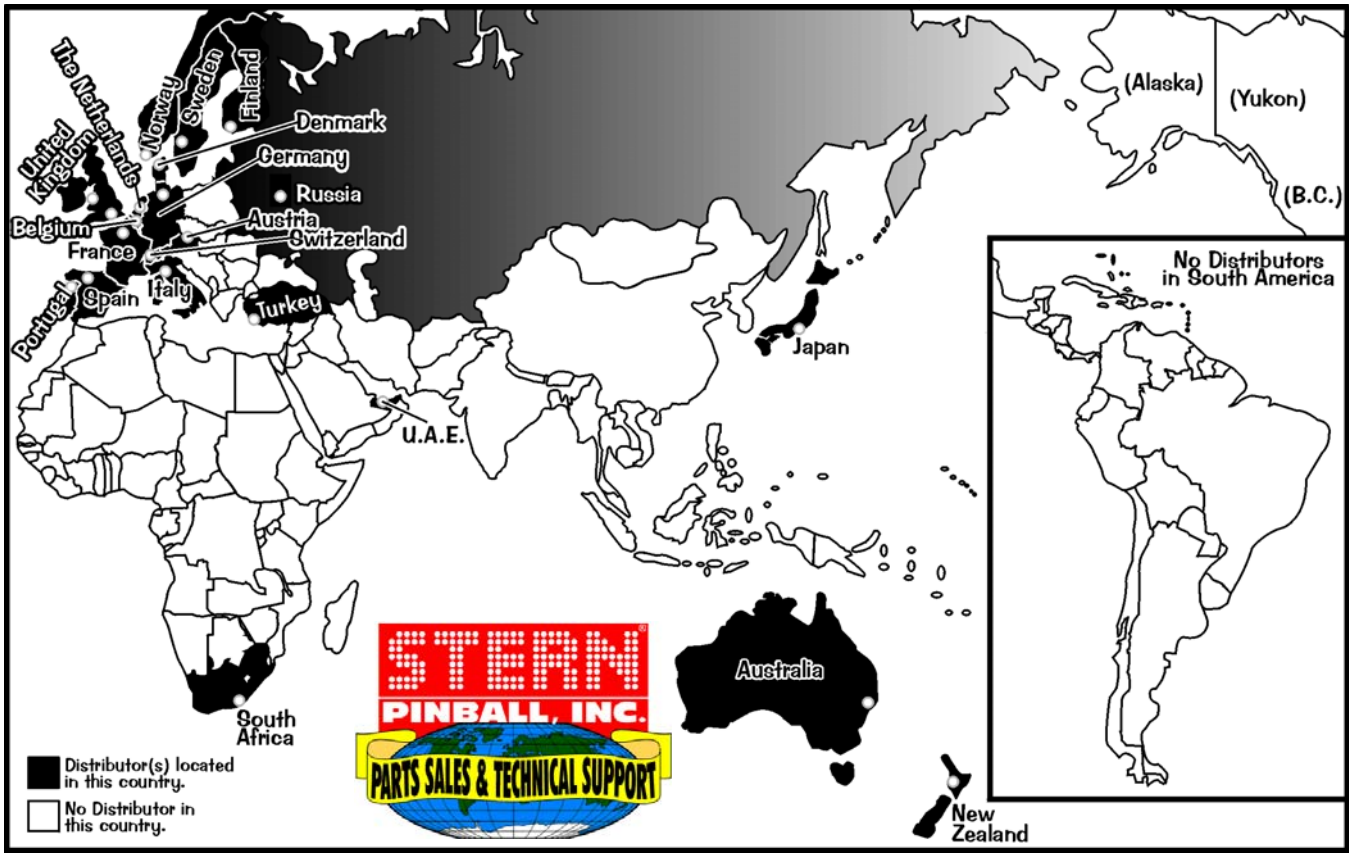

For *Parts & Service*, call your nearest Distributor. View the above maps & the directories on the next page to locate your closest Distributor in your state, province, or country. Distributors and phone numbers are subject to change. Call **Stern® Pinball, Inc.** *(Parts Sales & Technical Support)* with any questions or if your Distributor cannot help you: **1-800-542-5377** (in **USA** or **Canada**) or **1-708-786-5466**. Visit us at www.SternPinball.com for current Distributor Information & other pinball needs.

WPT™
WORLD POKER TOUR

Domestic Pinball & Redemption Distributors Directory

ALABAMA
Birmingham Vending
Birmingham (1)
205-324-7526

Franco Distributing
Montgomery (2)
334-834-3455

ARIZONA
Betson West
Phoenix
480-380-8857

Mountain Coin
Phoenix
602-269-7596

CALIFORNIA
Betson West
Buena Park (1)
714-228-7500
So. San Francisco (2)
650-952-4220

C.A. Robinson
Los Angeles (3)
323-735-3001
San Francisco (4)
650-871-4280

COLORADO
Game Exchange of CO
Denver
303-288-6500 (sales)

Mountain Coin
Denver
303-427-2133

CONNECTICUT
TDM Distributing
Williamantic
860-423-1403

FLORIDA
Birmingham Vending
Orlando (1)
407-425-1505

Brady Distributing
Miami [Miramar] (2)
954-874-1100
Orlando (1)
407-872-1666

GEORGIA
Greater Southern Dist.
Smyrna
770-803-3040

ILLINOIS
American Vending
Elk Grove Village (1)
847-439-9400

Betson Midwest
Bensenville (2)
630-238-9400

Complete Sales & Service
East Dundee (3)
224-293-6600

INDIANA
Shaffer Distributing
Indianapolis
317-899-2530

IOWA
Greater America Dist.
Johnston
515-278-4455

Moss Distributing
Des Moines
515-266-6422

KANSAS
United Dist., Inc.
Wichita
316-263-6181

LOUISIANA
AMA Distributors, Inc.
Metairie (1)
504-835-3232

New Orleans Novelty
New Orleans (2)
504-888-3500

MARYLAND
Betson Enterprises
Baltimore
410-646-4100

Parts & Service Only:

Weiner Distributing
Baltimore
410-525-2600

MASSACHUSETTS
Betson Ent. (NECO)
Norwood (1)
781-769-9760

Gekay Sales
E. Longmeadow (2)
413-525-2700

MICHIGAN
Shaffer Distributing
Livonia (2)
734-432-1040

MINNESOTA
Lieberman Companies
Minneapolis (1)
800-879-0321

Moss Distributing
Eagan (2)
952-881-8770

MISSOURI
Greater America Dist.
Kansas City (1)
816-531-4300

Moss Distributing
Kansas City (1)
816-231-6600

Shaffer Distributing
St. Louis (2)
314-645-3393

NEBRASKA
Central Dist.
Omaha
402-493-5600

Greater America Dist.
Omaha
402-553-2812

NEVADA
Mountain Coin
Las Vegas (1)
702-798-0900

Reno Game Sales
Reno (2)
775-829-2080

NEW JERSEY
American Vending Sales
Lakewood (2)
732-364-1199

Betson Enterprises
Carlstadt (1)
201-438-1300

Jack Guarnieri Service Co., Inc. (Pinballsales.com)
Lakewood (2)
800-473-5225

NEW MEXICO
Mountain Coin
Albuquerque
505-345-7706

NEW YORK
Betson Enterprises
New Hyde Park (2)
516-354-4647
Syracuse (3)
315-437-2400

Parts & Service Only:

Bay Coin
Richmond Hill (1)
718-291-5757

NORTH CAROLINA
Brady Distributing
Charlotte (1)
704-357-6284

Parts & Service Only:

Operators Distributing
Archdale (2)
336-884-5714

OHIO
Shaffer Distributing
Columbus (1)
614-421-6800
Valley View (2)
216-447-4486

OKLAHOMA
Galaxy Distributing
Tulsa
918-835-1166

OREGON
Mountain Coin
Portland
503-234-5491

Specialty Coin Products
Portland
503-786-9200
Toll-Free
800-987-4946

PENNSYLVANIA
Betson Enterprises
King Of Prussia (1)
610-265-1155
Pittsburgh (2)
412-331-8703

Superior Amusements
Wilkes-Barre (3)
570-824-9994

Shaffer Distributing
Pittsburgh (2)
412-920-1300

SOUTH CAROLINA
Parts & Service Only:

Green Coin
Mrytle Beach
843-626-1900

TENNESSEE
Brady Distributing
Memphis
901-345-7811

Parts & Service Only:

Green G.A.M.E.S.
Memphis
901-353-1000

TEXAS
Amusement Distributors
San Antonio (3)
210-225-3844

Betson Texas
Dallas (1)
214-638-4900

Commercial Music
Dallas (1)
214-741-6381

Discount Arcade Games
Crowley (1)
817-297-0440

H.A. Franz, & Co.
Houston (2)
713-523-7366
San Antonio (3)
210-226-6322

Master Sales
Corsicana (4)
903-874-4740

UTAH
Mountain Coin
Salt Lake City
801-262-5494

Struve Distributing
Salt Lake City
801-328-1636

WASHINGTON
Mountain Coin
Auburn (Seattle)
206-682-5700

WISCONSIN
Pioneer Sales & Svc.
Green Bay (1)
920-336-5800
Menomonee Falls (2)
262-781-1420

Lieberman Companies
Menomonee Falls (2)
800-236-1880

CANADA

ONTARIO
Starburst Coin Mach.
Toronto
416-251-2122

BRITISH COLUMBIA
Parts & Service Only:

Can. Coin Machine
Burnaby (1)
604-420-4008

Parts & Service Only:

Pacific Vending
Vancouver (2)
604-324-2164

Note: *For states and Canadian Provinces which do not have Distributors, call the neighboring state or province with the city closest to you (indicated with a white dot). States or Provinces with more than 1 city containing a distributor are numbered. View the map on the previous page.*

Note: *From inside the US, use prefix 1-.*

Note: *Distributors are subject to change.* *Visit us at* **www.SternPinball.com** *for current Distributor Information.*

International Distributors Directory

AUSTRALIA
Amusement Mach. Dist.
Matraville
+61 29 316 6000

AUSTRIA
Parts & Service Only:

R. Rupp
Leibnitz
+43 3452 86105

BELGIUM
NAMUSCO
Bruxelles
+32 (0) 2 414 4596

DENMARK
JK Automater A/S
Thisted
+45 97 92 09 25

ENGLAND
see UNITED KINGDOM

FINLAND
Pelika net Oy
Vantaa
+358 (0) 9 290 450

FRANCE
Avranches Automatic
Ducey
+33 23 389 6162

SFA
Paris
+33 15 326 8080

GERMANY
ADP Gauselmann
Espelkamp
+49 5741 27 33 84

Bergmann Int'l Gaming
Rellingen
+49 4101 3 02 40
Witten
+49 2302 28 25 40

Merkur Gaming GmbH
Luebbecke
+49 5772 4 94 22

HOLLAND
see THE NETHERLANDS

ITALY (RSM)
Tecnoplay S.A.
San Marino
+39 549 901 508

JAPAN
HIC, Inc.
Chiba-Ken
+04 7176 4040

THE NETHERLANDS
JVH Gaming Products
Tilburg
+31 13 595 3200

NEW ZEALAND
Coin Cascade Ltd.
Christchurch
+643 338 1411

Parts & Service Only:

Amco Machine Supplies
Auckland
+64 9846 7606

NORWAY
Parts for Pinballs
Sandefjord
+47 9242 1402

Vendcomatic AS
Oslo
+47 2 291 8383

PORTUGAL
Jacinto & Martins, S.A.
Belas
+35 1214 3256 24 *or*
+35 1214 3256 38

RUSSIA
Kalmancor Enterprise Ltd
Moscow
+0 95 124 5601 *or*
+0 95 124 5613

O.D.A. Game Machines
Moscow
+0 95 219 2949 *or*
+0 95 219 8917

SOUTH AFRICA
K & W Amusements
Port Elizabeth
+27 41 484 3344 *or*
+27 41 484 2940

SPAIN
Comercial Cocamatic
Coslada (Madrid)
+34 91 671 6980

SWEDEN
Bjuvia Fritid AB
Bjuv
+46 4238 6900

SWITZERLAND
Novomat, A.G.
Harkingen
+41 62 388 8961

TAIWAN, R.O.C.
SEC
Taichung
+886 4 229 10646

TURKEY
Balo
Marmaris
+0 252 413 83 35

UNITED ARAB EMIRATES
Warehouse of Games
Dubai
+971 4 883 5880

UNITED KINGDOM
Electrocoin
London, England
+44 208 965 2055

Parts & Service Only:

Electrocoin Aftersales
Cardiff, S. Glamorgan
+44 292 045 0345

Note: *From inside the US, use prefix 011-.*

POWER REQUIREMENTS

This game ***must be connected to a properly grounded outlet to reduce shock hazard*** & insure proper game operation. *See Sec.* ***5****, Schematics & Troubleshooting, Chp.* ***3****, Cabinet Wiring (Transformer Power Wiring), for transformer connections required for* ***Normal****,* ***High****, and* ***Low Line*** *conditions.*

Normal Line:	**110v AC - 125v AC @ 60Hz**	
Domestic use an 8AMP 250v Slo-Blo Fuse.	**AVG OPERATION** CURRENT: **2.8AMP** WATTAGE: **329w**	**MAX OPERATION** CURRENT: **8AMP** WATTAGE: **940w**
High Line:	**218v AC - 240v AC @ 50Hz**	
Export use 2x 5AMP 250v Slo-Blo Fuses. (*England & Hong Kong use an 8AMP 250v S/B Fuse.)	**AVG OPERATION** CURRENT: **1.8AMP** WATTAGE: **412w**	**MAX OPERATION** CURRENT: **5AMP** | **8AMP*** (England & Hong Kong use an 8A Fuse.) WATTAGE: **1145w** | **1832w***
Low Line:	**95v AC - 108v AC @ 50Hz / 60Hz**	
Export Japan Only use an 8AMP 250v Slo-Blo Fuse.	**AVG OPERATION** CURRENT: **2.6AMP** WATTAGE: **264w**	**MAX OPERATION** CURRENT: **8AMP** WATTAGE: **812w**

TRANSPORTATION

BEFORE TRANSPORTING

To reduce the possibility of damage, observe **ALL** precautions whenever transporting the game.

Read & follow *Section* ***1****, Chapter* ***1****,* ***Pinball Game Set-Up Procedures****, and* ***How to Secure the Backbox for Transporting****.* Remove the legs and secure the game within the transporting vehicle.

SAVE AND RETAIN ALL PRINTED INFORMATION INSIDE THE CABINET !

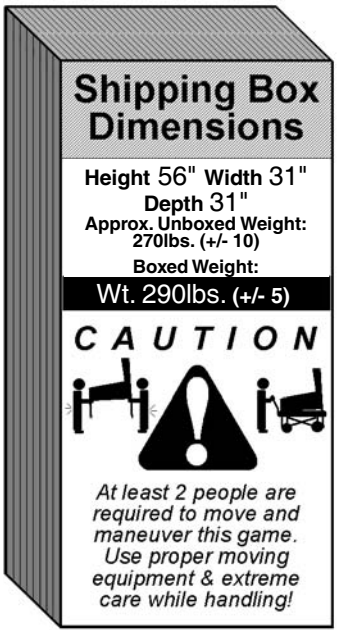

GAME DIMENSIONS

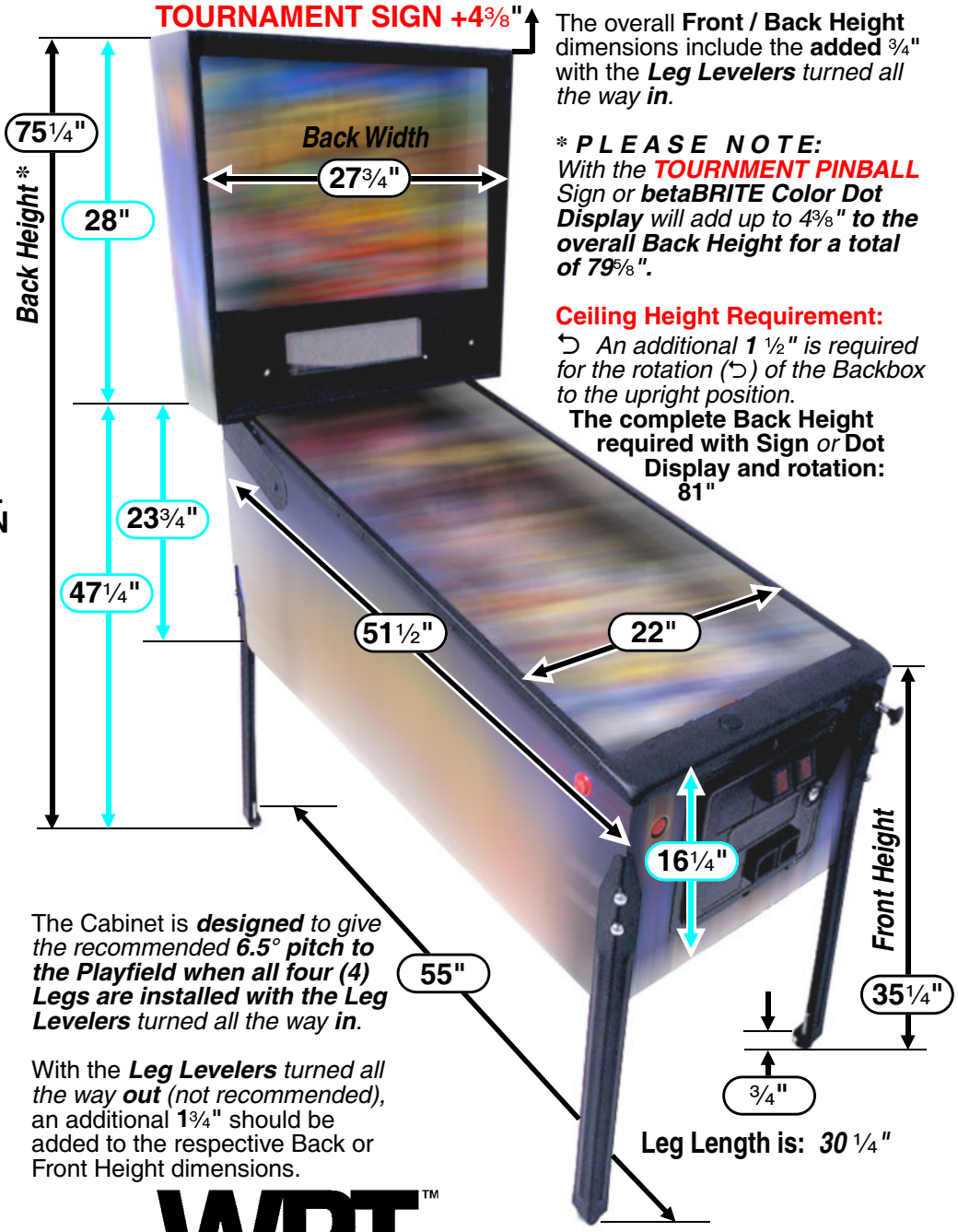

The overall **Front / Back Height** dimensions include the **added** ¾" with the ***Leg Levelers*** *turned all the way* ***in****.*

**** PLEASE NOTE:*** *With the* ***TOURNMENT PINBALL*** *Sign or* ***betaBRITE Color Dot Display*** *will add up to 4⅜"* ***to the overall Back Height for a total of 79⅝".***

Ceiling Height Requirement:

↺ *An additional* ***1*** *½" is required for the rotation (↺) of the Backbox to the upright position.*

The complete Back Height required with Sign *or* **Dot Display and rotation: 81"**

The Cabinet is ***designed*** *to give the recommended* ***6.5° pitch to the Playfield when all four (4) Legs are installed with the Leg Levelers*** *turned all the way* ***in****.*

With the ***Leg Levelers*** *turned all the way* ***out*** *(not recommended),* an additional **1¾"** should be added to the respective Back or Front Height dimensions.

Leg Length is: *30 ¼"*

WPT™ WORLD POKER TOUR

Find-It-In-Front: Dr. Pinball

World Poker Tour™ Pinball

How To Update Your Game Code for the New S.A.M. System ..... Inside Front

Find-It-In-Front: Dr. Pinball ..... DR. ❶ – ⓰

- ▶ For Proper Operation of this Pinball Game, (4) Pinballs must be installed in the Ball Trough! // Backbox Fuses, Cabinet Fuses, Playfield Fuses and Cabinet Switches ..... DR. ❶
- ▶ Find-It-In-Front: Dr. Pinball Section Explained ..... DR. ❷
  - ▷ Service Switch X4 Set Overview ▷ Functions in Game or Attract Mode ▷ Functions in the Service Menu
- ▶ Diagnostic Aids ..... DR. ❸
- ▶ CPU Dip Switch Settings ..... DR. ❸
- ▶ Switch Matrix Grid (1-64) and Dedicated Switches (D1-D24) // CPU/Sound SW1 Dip Switches (1-8) ..... DR. ❹
- ▶ Switch Locations ..... DR. ❺
- ▶ Lamp Matrix Grid (1-80) ..... DR. ❻
- ▶ Lamp Locations ..... DR. ❼
- ▶ Coils Detailed Chart Table ..... DR. ❽
- ▶ Coil & Flash Lamp Locations ..... DR. ❾
- ▶ Go To Adjustments Menu: Standard Adjustments [#1 – #61] ..... DR. ❿
- ▶ Go To Adjustments Menu: Feature Adjustments [#1 – #44] ..... DR. ⓫
- ▶ Go To Audits Menu: Earnings Audits [#1 – #13] / Standard Audits [#1 – #59] ..... DR. ⓬
- ▶ Go To Audits Menu: Feature Audits [#1 – #164] ..... DR. ⓭
- ▶ Domestic Pinball & Redemption Distributors Map // International Distributors Map ..... DR. ⓮
- ▶ Domestic Pinball & Redemption Distributors Directory // International Distributors Directory ..... DR. ⓯
- ▶ Power Requirements // Transportation // Game Dimensions ..... DR. ⓰

Sections 1-5, General Table of Contents ..... i – ii

Section 1, Chapter 1 of 1, After Set-Up ..... 1 – 4

- ▶ Pinball Game Set-Up Procedures 1
  - ▷ Backbox (backglass removed): ▷ Playfield (glass removed): ▷ With the Coin Door Open:
- ▶ Pinball Game Set-Up Future Reference 1-3
- ▶ How to Secure the Backbox ... // Leg Leveler Adjustment // Easy Access Service System - 2 Positions 4

Section 2, Chapter 1 of 1, Game Operation & Features ..... 5 – 6

- ▶ Start of Game Features 5
  - ▷ Starting a Normal Game ▷ Starting Team Play (Doubles!) ▷ Starting Tournament Play
- ▶ During Game Features 5
  - ▷ Feature Mode & Combination Shots ▷ Multiball ▷ Replay Feature
- ▶ End of Game Features 5
  - ▷ Game Endings ▷ Match Feature ▷ Entering Initials/Name
- ▶ Auto Percentaging 6
- ▶ Instruction Card 6

Section 3, Chapter 1 of 6, Service Menu System ..... 7 – 12

- ▶ Table of Contents for Section 3 7

Section 3, Chapter 2 of 6, Go To Diagnostics Menu ..... 13 – 20

Section 3, Chapter 3 of 6, Go To Audits Menu ..... 21 – 24

Section 3, Chapter 4 of 6, Go To Adjustments Menu ..... 25 – 34

Section 3, Chapter 5 of 6, Go To Utilities Menu ..... 35 – 40

Section 3, Chapter 6 of 6, Go To Tournament Menu ..... 41 – 42

Section 4, Chapter 1 of 2, Parts Identification & Location (The Pink Pages) ..... 43 – 64

- ▶ Table of Contents for Section 4, Chapter 1 43

Section 4, Chapter 2 of 2, Drawings for Major Assemblies & Ramps (The Blue Pages) ..... 65 – 94

- ▶ Table of Contents for Section 4, Chapter 2 65

Section 5, Chapter 1 of 4, Backbox Wiring ..... 95 – 98

- ▶ Table of Contents for Section 5 95

Section 5, Chapter 2 of 4, Playfield Wiring ..... 99 – 104

Section 5, Chapter 3 of 4, Cabinet and Coin Door Wiring ..... 105 – 108

Section 5, Chapter 4 of 4, Printed Circuit Boards (PCBs) ..... 109 – 130

Appendixes A - J, Table of Contents ..... End of Manual

- ▶ Stern Pinball, Inc. Limited Warranty // Cautions, Warnings & Notices ..... last page

GLOSSARY OF TERMS

A Followed after a number means "Amp." or Ampage in an expression relating to an electrical object. (e.g. 8**A**).

AC (Acronym) **A**lternating **C**urrent.

Adj. (Abbreviation) Adjustment(s).

Assy. (Abbreviation) Assembly.

Au. (Abbreviation) Audit(s).

Bd. (Abbreviation) Board.

BOT (Abbreviation) Bottom.

Brkt. (Abbreviation) Bracket.

Bridge Rectifier A configuration of a diode that allows current to flow in one direction producing both positive and negative pulsating DC Voltages.

Color Coding See Appendix H or I, Plastic Part Color Chart or Section 4, Chapter 1, Playfield - Plastic Posts & Spacers.

Combination (Combo) [Shot] Any variable pinball shot(s) made successively.

Conn. (Abbreviation) Connector.

CMOS Short for COSMOS (Complementary Symmetry M.O.S.); Complementary Metal-Oxide Semi-Conductor.

CN (Abbreviation) Connector (e.g. **CN**5-P3).

CT (Abbreviation) Center.

DC (Abbreviation) Direct Current.

DT (Abbreviation) Drop Target(s).

DOTS (Acronym) **D**iode **O**n **T**erminal **S**trip.

EB (Abbreviation) Extra Ball.

Eject Playfield surface device to kick ball back into play; Saucer.

EPROM (Acronym) **E**rasable **P**rogrammable **R**ead **O**nly **M**emory. Can be erased using UV Light and re-programmed.

e.g. (Abbreviation) Latin- Exempli gratia. For Example.

EOS (Acronym) **E**nd-**O**f-**S**troke (i.e. Switch for flipper).

F (Abbreviation) Fuse (i.e. F23).

GA-Turn Gauge & Turn describing the windings on a coil (e.g. 23-800, 23 is the gauge of wire and 800 is the amount of windings.

G.I. (Abbreviation) General Illumination (Lamps).

HWH (Abbreviation) Hex Washer Head.

IC (Acronym) **I**ntegrated **C**ircuit (As in after 24-Pin IC).

ID or I.D. (Acronym) **I**nside **D**imension.

i.e. (Abbreviation) Latin- Id est. That is.

IO or I/O (Abbreviation) Input / Output (e.g. I/O Power Driver Bd.)

LT, Lt. or L. (Abbreviation) Left.

Laser Kick A coil/plunger used above the playfield to kick pinball back into play.

LED (Acronym) **L**ight **E**mitting **D**iode.

Loop [Shot] Continuously up a ramp and back to the flipper.

Lwr. (Abbreviation) Lower.

Orbit [Shot] From the left or right flipper around the back rail of the playfield back to the flipper.

MB (Abbreviation) Magnet Board.

M-BALL or MBALL (Abbreviation) Multiball™ More than 1 ball in game play.

MID (Abbreviation) Middle

Non-Reflexive See Reflexive.

No. or Nº or # (Abbreviation) Number

NPF (Acronym) **N**o **P**roblem **F**ound.

N.C. or NC (Abbreviation) Normally Closed.

N.O. or NO (Abbreviation) Normally Open.

NS (Abbreviation) Not Stuffed. (Use in Part Listings, Sec. 5)

OD or O.D. (Abbreviation) Outside Dimension.

P (Abbreviation) Pin (e.g. CN5-**P**3).

PCB (Acronym) **P**rinted **C**ircuit **B**oard

P/F (Abbreviation) Playfield.

PIA LED (Acronym) **P**eripheral **I**nterface **A**dapter **L**ight **E**mitting **D**iode.. This is a diagnostic LED on the CPU; it should not be lit during normal operation of a pinball game.

Plumb Bob Tilt Weight on Tilt Assembly.

PPH (Abbreviation) Phillips Pan Head.

Pop(s) Another term for Turbo Bumper(s).

PPB (Acronym) Playfield Power Board ("Popcorn-Popping Bd.").

PREV (Abbreviation) Previous.

PSB (Abbreviation) Power Supply Board

RAM (Acronym) **R**andom **A**ccess **M**emory. RAM **can** store input instructions and supply output information.

Reflexive/Non-Reflexive **Reflexive**—Solenoid Drive Transistor is enabled directly by a switch closure on the (Relating to CPU Boards) solenoid assembly (Ver. 1/2).
Non-Reflexive—Solenoid Drive Transistor is enabled by the CPU after reading a switch closure in the Switch Matrix (Ver. 3). Also note: All CPU Boards are backwards compatible (e.g. Jurassic Park/Ver. 3 to Time Machine/ Ver. 2). Swapping a Ver. 2 Board to a Ver. 3 is not possible due to the special solenoids section (i.e. Slingshots, Turbo Bumpers, etc.) changing from ***REFLEXIVE*** to ***NON-REFLEXIVE*** on Ver. 3 Boards.

Relay An automatic switch operated by current in a coil.

ROM (Acronym) **R**ead **O**nly **M**emory. ROM **canno**t store input instructions but can supply output information. ROM can be programmed only once.

RMA (Abbreviation) Return Merchandise Authorization Number

RT, Rt. or R. (Abbreviation) Right; ("**R**" at the end of Target Assy. Part Nº signifies Target Insert is **R**eversed.)

RO (Abbreviation) Rollover (switches).

Saucer See Eject.

Scoop A hole into the playfield. A metal scoop is in place to guide the ball into the kick-back under the playfield.

Slam Tilt A switch which closes when the game is slammed into or the Coin Door is slammed shut. Depending on adjustable settings, will cancel game in play when the number of closures required is achieved.

SMB (Abbreviation) Shaker Motor Board.

Solenoid A coil used for Electro Magnetic devices such as relays, flippers, slingshots, etc.

SSFB (Abbreviation) Solid State Flipper Board.

STEP Refers to the service switches on the coin door.

Sub-Assy. (Abbreviation) Sub-Assembly.

S-U or S/U (Abbreviation) Stand-Up (targets).

TM (Abbreviation) Trademark

Transfer [Shot] Maneuvering the ball in play from one flipper to the other. With flipper in the up position and the ball cradled by that flipper one would activate the flipper button in a quick repetitive manner to bounce the ball to the other side. Skilled players can rebound the ball off the slingshot.

Tri-Ball Three balls in play.

TTL (Abbreviation) Transistor-Transistor Logic

Upr. (Abbreviation) Upper.

V or v (Abbreviation) Volt(s).

Ver. (Abbreviation) Version.

VUK (Acronym) **V**ertical **U**p-**K**icker (Super or Standard).

X (Abbreviation) "Times" A multiplier; also used in dimensions.

X-Ball An undetermined number of ball(s) during game play.

Zener Diode A semi-conductor diode used for voltage regulation. Application depends on reverse break-down voltage.

"-00B" "B" at the end of Coil Part Numbers signifies that the diode is attached to the bottom of the lug.

"-00T" "T" at the end of Coil Part Numbers signifies that the diode is attached to the top of the lug (the side nearest the coil-winding).

STERN® PINBALL, INC. LIMITED WARRANTY

STERN® PINBALL, INC., *("SELLER")* WARRANTS ONLY TO THE INITIAL PURCHASER OF ITS PRODUCTS THAT THE ITEMS LISTED BELOW ARE FREE FROM DEFECTS IN MATERIAL AND WORKMANSHIP UNDER NORMAL USE AND SERVICE FOR THE ***WARRANTY PERIOD SPECIFIED:***

PRINTED CIRCUIT BOARDS (GAME LOGIC): 2 MONTHS
DOT MATRIX DISPLAY BOARDS: 9 MONTHS

NO OTHER PARTS OF SELLER'S PRODUCT ARE WARRANTED.

WARRANTY PERIODS ARE EFFECTIVE FROM THE INITIAL DATE OF SHIPMENT FROM SELLER TO ITS AUTHORIZED DISTRIBUTORS.

SELLER'S SOLE LIABILITY SHALL BE, AT ITS OPTION, TO REPAIR OR REPLACE PRODUCTS WHICH ARE RETURNED TO SELLER DURING THE WARRANTY PERIODS SPECIFIED, PROVIDED:

1. *SELLER IS NOTIFIED PROMPTLY UPON DISCOVERY BY PURCHASER THAT STATED PRODUCTS ARE DEFECTIVE.*
2. *SUCH PRODUCTS ARE PROPERLY PACKAGED AND THEN RETURNED FREIGHT PREPAID, TO SELLER'S PLANT.*

THIS WARRANTY DOES NOT APPLY TO ANY PARTS DAMAGED DURING SHIPMENT AND/OR DUE TO IMPROPER HANDLING, OR DUE TO IMPROPER INSTALLATION OR USAGE, OR ALTERATION. IN NO EVENT SHALL THE SELLER BE LIABLE FOR ANY ANTICIPATED PROFITS, LOSS OF PROFITS, LOSS OF USE, ACCIDENTAL OR CONSEQUENTIAL DAMAGES OR ANY OTHER LOSSES INCURRED BY THE CUSTOMER IN CONNECTION WITH THE PURCHASE OF A STERN® PINBALL, INC. PRODUCT.

WARRANTY DISCLAIMER

EXCEPT AS SPECIFICALLY PROVIDED IN A WRITTEN CONTRACT BETWEEN SELLER AND PURCHASER, THERE ARE NO OTHER WARRANTIES, EXPRESS OR IMPLIED, INCLUDING ANY IMPLIED WARRANTIES OF MERCHANTABILITY OR FITNESS FOR A PARTICULAR PURPOSE.

CAUTIONS, WARNINGS & NOTICES

Caution

FOR SAFETY AND RELIABILITY, SUBSTITUTE PARTS AND EQUIPMENT MODIFICATIONS ARE NOT RECOMMENDED *(AND MAY VOID ANY WARRANTIES)*. USE OF NON-STERN® PINBALL INC. PARTS OR MODIFICATIONS OF GAME CIRCUITRY, MAY ADVERSELY AFFECT GAME PLAY, OR MAY CAUSE INJURIES. TRANSPORT PINBALL GAMES WITH HINGED BACKBOX IN THE DOWN POSITION ONLY! ALWAYS TAKE GREAT CARE WHEN SERVICING ANY GAME. ALWAYS READ THE SERVICE MANUAL BEFORE REPLACING OR SERVICING COMPONENTS. **SUBSTITUTIONS OF PARTS OR EQUIPMENT MODIFICATIONS** MAY VOID FCC TYPE ACCEPTANCE.

Always Disconnect The Line Voltage Before Servicing. Some Parts May Still Hold Current When Unplugged.

Warning

THIS EQUIPMENT GENERATES, USES, AND CAN RADIATE RADIO FREQUENCY ENERGY, AND IF NOT INSTALLED AND USED IN ACCORDANCE WITH THE INSTRUCTIONS MANUAL, MAY CAUSE INTERFERENCE TO RADIO COMMUNICATIONS. IT HAS BEEN TESTED AND FOUND TO COMPLY WITH THE LIMITS FOR A CLASS A COMPUTING DEVICE PURSUANT TO SUBPART J OF PART 15 OF FCC RULES, WHICH ARE DESIGNED TO PROVIDE REASONABLE PROTECTION AGAINST SUCH INTERFERENCE WHEN OPERATED IN A COMMERCIAL ENVIRONMENT. OPERATION OF THIS EQUIPMENT IN A RESIDENTIAL AREA IS LIKELY TO CAUSE INTERFERENCE IN WHICH CASE THE USER AT HIS OWN EXPENSE WILL BE REQUIRED TO TAKE WHATEVER MEASURES MAY BE REQUIRED TO CORRECT THE INTERFERENCE.

RF INTERFERENCE NOTICE, CABLE HARNESS PLACEMENTS AND GROUND STRAP ROUTING ON THIS GAME HAVE BEEN DESIGNED TO KEEP RF RADIATION AND CONDUCTION WITHIN LEVELS ACCEPTED BY THE FCC RULES. TO MAINTAIN THESE LEVELS, REPOSITION HARNESSES AND RECONNECT GROUND STRAPS TO THEIR ORIGINAL PLACEMENTS, IF THEY BECOME DISCONNECTED DURING MAINTENANCE.

Notices

THIS DOCUMENT AND THE DATA DISCLOSED HEREIN OR HEREWITH IS NOT TO BE REPRODUCED (EXCEPT WHERE NOTED), USED OR OTHERWISE DISCLOSED IN WHOLE OR IN PART TO ANYONE WITHOUT WRITTEN CONSENT OF STERN® PINBALL, INC. ***WARNING:*** PRODUCTS IN THIS MANUAL, THE COMPANY NAME AND DEVICES AND THE DESIGN OF THE MANUAL ITSELF, ARE PROTECTED BY FEDERAL PATENTS *(AND PATENTS PENDING)*, DESIGN REGISTRATIONS, TRADEMARKS AND COPYRIGHTS. ACTION WILL BE TAKEN IN THE EVENT OF INFRINGEMENT OR IMITATION. THE RIGHT IS RESERVED TO CHANGE SPECIFICATIONS WITHOUT PRIOR NOTICE.

© 2006 Manufactured by Stern® Pinball, Inc.. Portals, Icon Designs, ToPS™Logo, Bump N' Win™Logo & all related indicia are trademarks of Stern® Pinball, Inc. All Rights Reserved. Made in the USA.

"Multiball" is a registered trademark of Williams Electronics Games, Inc. Used by permission.

PCB Schematics (Section 5, Chapter 4) by CES (Creative Electronics & Software, Inc.) © 1995.

© WPT Enterprises, Inc. All Rights Reserved. WPT, World Poker Tour, and Spade Card Design are trademarks of WPT Enterprises, Inc. All Rights Reserved.

WPT™
WORLD POKER TOUR

Copyright © 1998 BETA-BRITE and logo are trademarks of Adaptive Micro Systems, Inc. registered in the United States Patent and Trademark Office. All Rights Reserved.

Bee Royal Face Card Designs used are © 2005-2006 The United States Playing Card Company. All Rights Reserved.

WPT
RIVER
TURN
FLOP
POKER HANDS
ROYAL FLUSH
STRAIGHT FLUSH
FOUR OF A KIND
FULL HOUSE
FLUSH
STRAIGHT
THREE OF A KIND
2 PAIR
1 PAIR
LIGHT POKER HANDS
TEXAS HOLD 'EM
HOLE CARDS
FLOP
TURN
RIVER
STERN PINBALL
YOUR HAND
WPT WORLD CHAMPIONSHIP
ARUBA
LOS ANGELES
BAHAMAS
PARIS
ATLANTIC CITY
LAS VEGAS
DEAL AGAIN
CHAMPION
CHAMPION
LIGHT CHIP TRICK
LIGHT CHIP TRICK
HOLD EITHER FLIPPER BUTTON FOR EXTRA INFO
HOLD EITHER FLIPPER BUTTON FOR EXTRA INFO
WORLD POKER TOUR
TEXAS HOLD 'EM
POKER HANDS
ACE IN THE HOLE MULTIBALL
NO LIMIT MULTIBALL
EXTRA BALL
WORLD POKER TOUR
50¢ = x1
SUPER VALUE
$2.00 = x5

▼ U.S. ▼
Customary
Inch Ruler

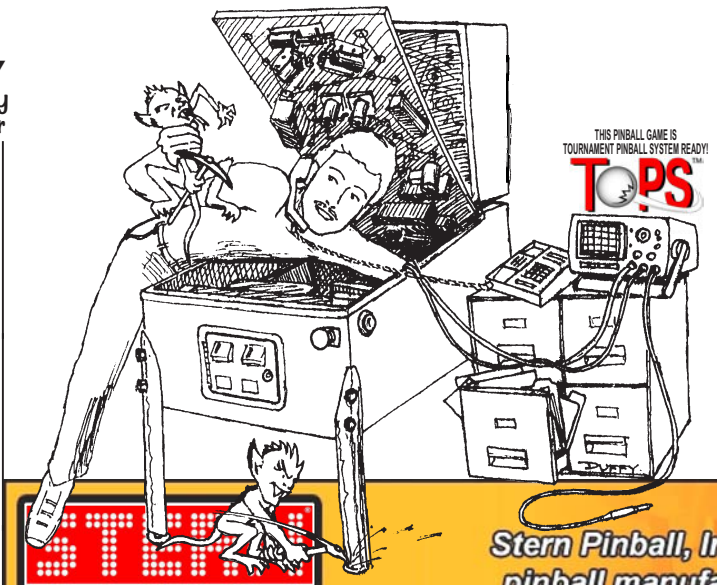

WORLD POKER TOUR™

STERN PINBALL, INC.

Stern Pinball, Inc. is the only coin-op pinball manufacturer on the planet!

2020 Janice Avenue
Melrose Park, IL 60160
phone: 708.345.7700
fax: 708.345.7813
info@sternpinball.com

Technical Support & Parts Sales

2002, 2003 (2-Disc Set) & 2004 (2-Disc Set) CD-GAMEs are now available! *Click year for more info*

We at STERN Pinball continuously strive to provide our distributors, operators, and game owners with the best technical support possible. We, therefore, have provided you with the service options listed below. If your game requires parts and/or service, please contact your nearest STERN Pinball distributor (See our Distribution List). For any additional assistance, contact our technical service staff at 1-800-KICKERS (1-800-542-5377) or by e-mail at parts.service@sternpinball.com.

If your STERN Pinball is in need of repair, please contact your nearest STERN Distributor.

Pinball Game Parts
Offering Service Game Manual excerpts: Parts Identification & Location, Drawings for Major Assemblies & Ramps and Appendixes A-J *(updated with each game)*

Service Bulletins
Detailing Technical Information, Tips, FYIs, Notices and Updates

GAME Code Library
Offering game code for all Data East®, Sega™ and STERN® Pinballs *(EPGAME Programmer required)*

Coinage Cards
Detailing the Country Setting, Pricing Scheme and Dip Switch Setting

Schematics, Theory of Operation and Troubleshooting Tips
Drawings on the White Star Board System™

Tricks & Tips
1st Time Pinball Set-Up / Prev. Maintenance

Track Your Order Via UPS

NTE Semi-Conductor Cross Reference

Radio Shack Component Catalogue

STERN PINBALL, INC. PARTS SALES & TECHNICAL SUPPORT

Metric Conversion

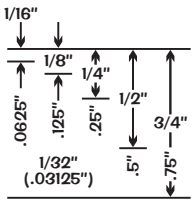

1" = 2.54 cm *or* 25.4 mm
1 cm = .3937"
1 mm = .03937"

For metric, multiply the inch value by the metric value:

example: **5" X 2.54 cm = 12.7 cm or 127 mm**

For US, multiply the metric value by the inch value:

example: **13 cm X .3937" = 5.1181"**

1-800-542-5377 STERN PINBALL, INC

Visit our website **www.sternpinball.com** for Pinball & Redemption game information!

Click Tech Support & Parts Sales *to view, print or download all of the above!*

HELP US, HELP YOU! *If you have any suggestions, questions, need technical advice, find errors or have comments, contact us through our website or call!*

This Game Service Manual and all other documents relating to this product, playfield components, features, rules, programming and operation are subject to change without notice (Service Bulletins, if applicable, available through our website).

CE Games shipped factory direct to Europe from Stern Pinball, Inc. are CE approved and will have an "E" prefix attached to the Serial Number.

7 80 - 5088 - 00

After Set-Up

Pinball Game Set-Up Procedures

...after reading the Pinball Game Set-Up Instruction Sheet (SPI Part Nº 755-5310-00) included with your New Pinball Game, continue with the below procedures:

Backbox (backglass removed):

1. Check all connectors for loose wire terminations. Reseat any loose wire by pushing in on the terminal. **Push on all** plugged in connectors for the CPU/Sound, I/O Power Driver and the Display Power Supply Boards *(check that they are properly seated).* Ensure the Fluorescent Light Tube is seated correctly. Check that all fuses are seated properly *(fuses on the I/O Bd. have Red LED Status indicators). Reinstall backglass, lock the Backbox and secure its' keys back inside the Coin Door.*

Playfield (glass removed):

2. Remove all shipping tie downs, shipping blocks, packing foam, etc., if present.
READ ALL PRINTED INFORMATION! Shipping Instructions and/or Decals describe warnings, cautions, and/or important information specific to the game. **SAVE ALL IN CABINET!**

If pinballs were already installed into the Ball Trough *(under the arch)*, remove them before performing the following step. ******Pinballs can fall out and away from the playfield ******

3. Raise the playfield and rest it against the Backbox. See the illustration **"Easy Access Service System - 2 Positions"** *on Page 4.*

4. Visually inspect all cabinet cables and connector terminations; ensure no wires or cables are pinched and that cable harnesses are not pulled tight.

5. Make sure the proper amount of pinballs are installed *(decal on the lock down assembly and the inside manual cover describe how many pinballs are needed).*

6. Lower the playfield and ensure game is **level side-to-side** by adjusting Leg Levelers, if required. See the illustration **"Leg Leveler Adjustment"** *on Page 4.* Start with the Leg Levelers turned all the way in *(1.25" from floor to bottom of leg),* depending on the condition of the floor, adjust the Leg Levelers as required until the **game pitch is 6.5°**, determined by the Bubble Level.

USE THE BUBBLE LEVEL ON THE WOOD RAIL (LOWER RIGHT) TO DETERMINE IF LEVEL IS ACHIEVED. BUBBLE SHOULD APPEAR BETWEEN THE 2 BLACK LINES. SEE PAGE 4 FOR AN ILLUSTRATION.

The playfield incline affects difficulty of play. Use the recommended incline; Game difficulty is best varied using game adjustments.

With the Coin Door Open:

7. If desired, perform any self tests at this time *(see Section **3**, Chapter **1**, **Service Menu Introduction**, and Chapter **2**, **GO TO DIAGNOSTICS MENU**, for information on how to enter "**Begin Play Test**" and "**Game Name Test**" Menus, if any, to test components on the game).*

8. If desired, adjust **Game Pricing, Standard and/or Custom** *(see Section **3**, Chapter **4**, **GO TO ADJUSTMENTS MENU** and Section **3**, Chapter **5**, **GO TO INSTALLS MENU** to adjust **Game Difficulty**, **3-** or **5-Ball Play**, **Home** or **Tournament Settings**, **Novelty**, **Add-A-Ball**, etc.).*

Per CE: "The appliance has to be placed in a horizontal position." "This appliance is not to be cleaned by a Water Jet."

Open up the Printable Version in both 8-1/2 X 11 & 11 X 17.

Pinball Game Set-Up Future Reference

CAUTION: At least 2 people are required to move and maneuver game.
Use proper moving equipment & extreme care while handling. Pinball game is 260lbs (+/- 10).
Refer to Game Manual for further Game Set-Up Procedures (Sec. 1, Chp. 1) and other important information!
TOOLS REQUIRED: 5/8" Socket Wrench & Utility Knife

1. Before unpacking box, lay the box flat on its side with **"TRUCK THIS SIDE ONLY"** facing the floor.

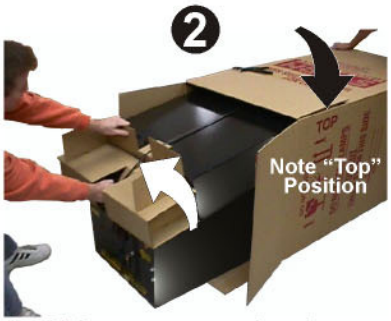

2. Slide game out using the **Black Nylon Strapping** as a handle.

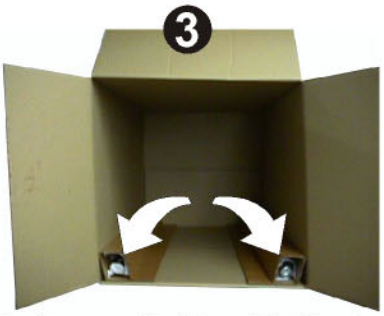

3. Remove the **Four (4) Identical Legs with Levelers** from the carton and set aside. (***SAVE!*** *all packing materials and information sheets related to this pinball until Set-Up is complete.)*

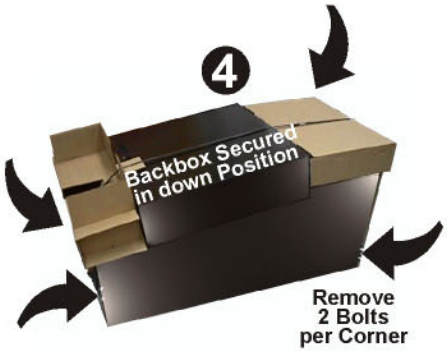

4. At this point **DO NOT CUT STRAPPING** *(You want to keep the Backbox secured in the down position).* Loosen and remove the 8 Leg Bolts (use 5/8" Socket Wrench) and set aside.

5. Lift game into an **UPRIGHT POSITION** *(Coin Door Facing Up).*

6. Install **FRONT LEGS** using the bolts removed from ***Step 4***. *Secure tightly.* ***Take care not to scratch the Black Finish on any of the Legs.***

7. Carefully set the game down on the **FRONT LEGS**. *Care should be taken...Game is heavy, two (2) people are recommended for this and the following step.*

8. Using supports or two (2) people, prop the rear of the cabinet up and install **REAR LEGS**. *Secure tightly.*

9. Cut **BLACK NYLON STRAPPING**. ***CAUTION:*** *Strapping will* ***SNAP, protect your eyes! Use extreme care*** *when using a utility knife or scissors.*

WPT™
WORLD POKER TOUR

Pinball Game Set-Up Future Reference Continued

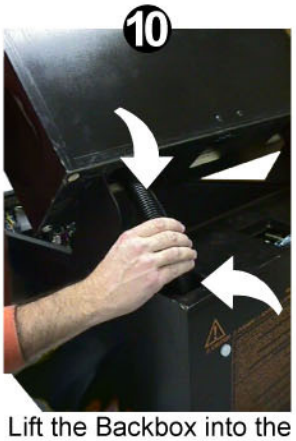

10. Lift the Backbox into the **UPRIGHT POSITION** *(Ensure the cables do not get pinched).*

11. After the **BACKBOX** is in the **UPRIGHT POSITION**, locate the **5/16" HEX KEY**. While inserted, rotate **KEY** with a **3/4** turn until latched & locked.

12. The next step you will remove the **PLAYFIELD GLASS** & **BACK GLASS** to access the inside of the cabinet & Backbox.

NOTE: KEYS are tied to the **Shooter Rod*** *(if equipped)* or taped to the **Playfield Glass** *(if equipped with Auto Plunger Button). Remove keys. One (1) set of keys opens the Coin Door, the other set is used to unlock the* ***Back Glass*** *to gain access to the White Star Board System.*

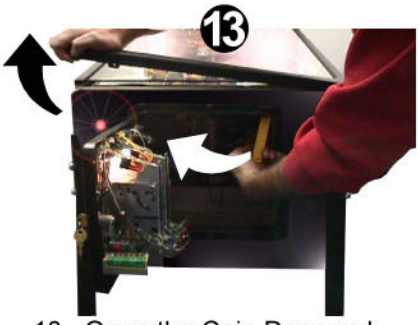

13. Open the Coin Door and pull the **YELLOW HANDLE** to the **LEFT** and at the same time pull up on the **FRONT TOP MOLDING** and remove. The **GLASS** can now be pulled out towards you and removed. ***TAKE CARE*** *while moving; set glass on a safe surface.*

14. Through the open **Coin Door**, remove the **RETAINING RING** at the rear of the **CASH BOX** and open. Remove the **PINBALLS** & the **PLUMB BOB** *from the* **SPARE PARTS BAG.** *(Save the other spare parts in cabinet).* Install the **PINBALLS** by placing them on the playfield so they can roll into the Outhole **Ball Trough**.

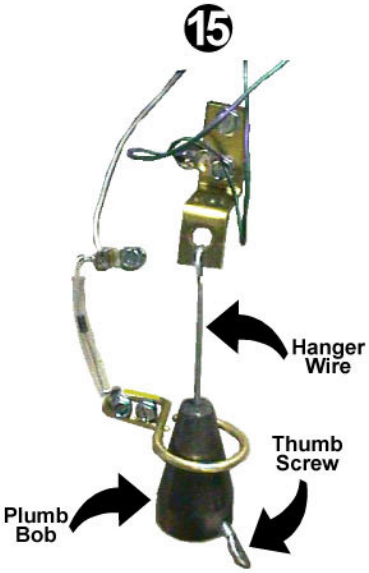

15. Install the **PLUMB BOB** on the **Hanger Wire** & tighten the **Thumb Screw**. Loosening the **Thumb Screw** & lowering or raising the **PLUMB BOB** makes the ***Games Tilt Function*** more or less sensitive.

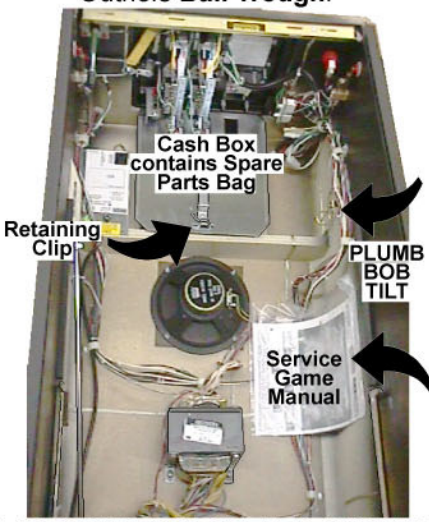

Remove the **PINBALL GAME MANUAL** *(stapled to side of the left wall of the cabinet). Review Section 1, Chapter 1, which describes how to lift the playfield to access the Plumb Bob Tilt Assembly.* The manual gives you all the important information you need to prepare for final set-up and other important information (such as Parts, Diagnostics, Schematics and more...).

STERN PINBALL, INC.
1-800-542-5377

ALWAYS STORE THE MANUAL & INFORMATION SHEETS INSIDE THE CABINET WHEN NOT USING.

7 WORLD POKER TOUR™

How to Secure the Backbox for Transporting

*For more Backbox details & part numbers, see Section **4**, Chapter **1**, **Parts Id. & Location**, **Backbox Assembly**.*

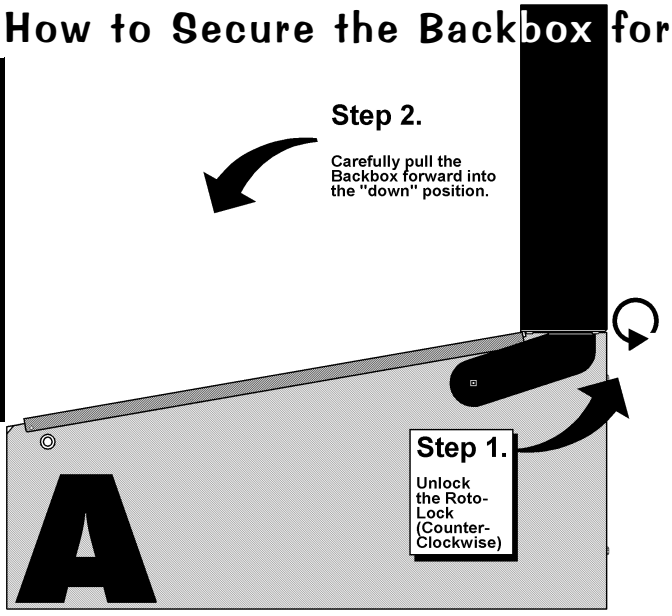

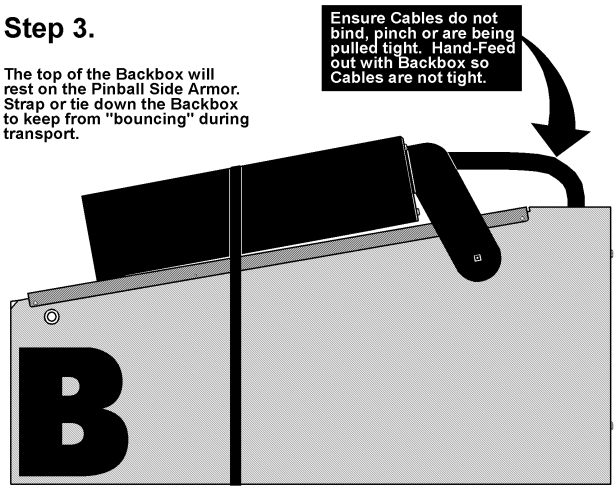

Leg Leveler Adjustment

Attach the four (4) Leg Assemblies to cabinet corners with the eight (8) leg bolts provided .

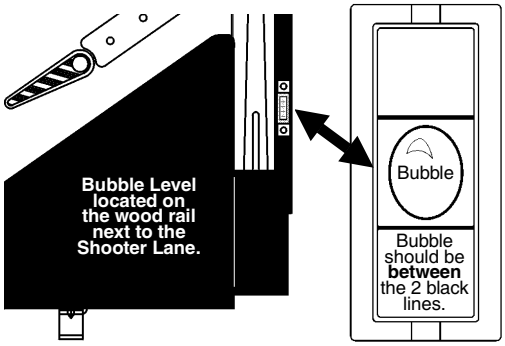

Start adjustment with the leg levelers *turned all the way in*.

View the *bubble* in the level provided on the right side wood rail.

Adjust the front or rear levelers as necessary to cause the bubble to float between the two (2) black lines.

Use a pinball to roll down the center of the playfield for side-to-side leveling.

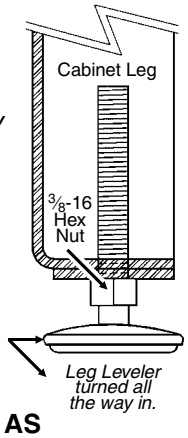

YOUR PLAYFIELD PITCH IS NOW AT 6.5° AS REQUIRED FOR PROPER GAME PLAY!

Note: *For custom adjustment greater than >6.5° can be achieved by turning out the rear leg leveler(s), however,* ***it is not recommended.***

Easy Access Service System - 2 Positions

With the front molding & glass removed, carefully lift the playfield *(take care when using the Bottom Arch to hoist).*

Position 1
When lifted high enough, the ***Playfield Support Slide Brackets*** (**Fig. 1A**) can be seen and can clear the cabinet front (**Fig. 1B**). At this time, pull the playfield toward the front of the cabinet, checking that the mechanical components clear the cabinet front, then rest the playfield on the ***Playfield Support Slide Brackets*** at the front channel of cabinet (**Fig. 1C**);

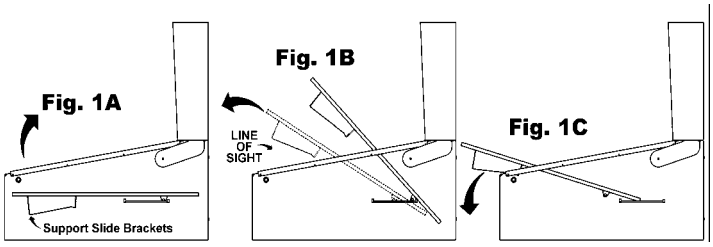

Position 2
With the playfield at rest, hold the sides & pull toward the front of the cabinet *(approx. 6" to 8")*, until resistance is felt from ***Edge Slide Brackets*** stopping against the ***Slide & Pivot Support Brackets*** located on either side of the cabinet (**Fig. 2A**). At this time, swivel the playfield toward the Backbox, then rest on the top edge (**Fig. 2B & 2C**).

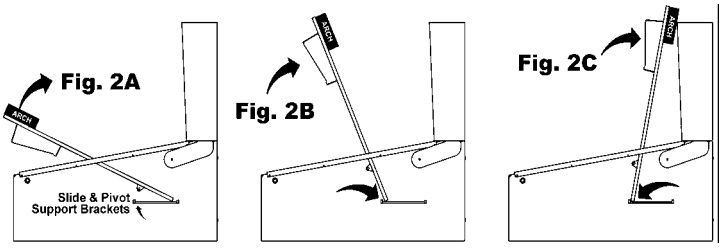

Game Operation & Features

Start of Game Features

Starting a Normal Game

Insert coin(s). The game generates a sound for the first coin & for each subsequent coin with the display indicating the number of credits posted. Press the **Start Button** and a start-up sound is produced, and the posted credits are reduced by one. Subsequent players can be added (**up to 4 can play!**) by pressing the **Start Button** before the end of ball 1 *(with sufficient credit in the game).*

The display now indicates the player or # of players selected from the total depressions of the **Start Button**. The display indicates the ball in play, and a ball is served to the *Shooter Lane*. An introduction is shown followed by Skill Shot Graphics and/or instructions. Pressing the **Start Button** after ball 1 of any player will start a new game *(if credits are available),* ***but only*** if the **Start Button** is depressed for 2-3 seconds. This delay is to avoid accidental "re-starts" of a game. ***Note:*** *Any partial credit remaining during game play after the end of ball 1, or power down, will be eliminated.*

Starting Team Play (Doubles!)

This option is adjustable with **Standard Adjustment (Adj.) 62, Team Scores** (Default = **NO**). If **Standard Adj. 62, Team Scores** is changed to **YES**, then Team Play will be made available. ***Team Play only works in a 4-Player Game.*** The totals for Players 1/ 3 (Team 1) & Players 2 / 4 (Team 2) are then displayed individually ***as well as*** the combined score for **BOTH TEAMS**.

Starting Tournament Play

This Pinball Game is **Tournament Ready**. ***Optional Tournament betaBRITE Color Dot Display & hardware (sold separately) is available.*** *Review Section **3**, Chapter **6**, **GO TO TOURNAMENT MENU**, for more info!*

Unlike a *"Normal Game"*, the Tournament Game is started by depressing the **Tournament Start Button** *(located on the Front Molding, if installed).* If adequate credit(s) are posted **and** a ***Tournament is started (set-up properly)*** via the **Service Menu** *(select the "TOUR" Icon in the Main Menu)*, the **Tournament Start Button** will flash. *Any adjustments or installs changed will not be in affect. Starting a Tournament Game defaults to preprogrammed Tournament Rules (e.g. No Extra Balls, Specials or Bonus Credits are awarded); however, starting a Normal Game after a Tournament Game will then revert back to any unique adjustments or installs performed previously.* **During** and **End of Game Features** operate in the same manner *(differences in adjustment defaults are present).*

During Game Features

Feature Mode & Combination Shots

Features are lit on the playfield and started by completing *certain shots (e.g. completion of Target Banks, Orbit(s), Ramp(s) and/or any combination of the shots).*

Multiball

Multiball is started after completion of certain features *(amount of balls used depends on game rules).*

Replay Feature

Replay awards are given as the player exceeds a High Score Level during game play. This can be adjusted with **Standard Adj. 3, Replay Award** (Default = **CREDIT**). Players exceeding the High Score Levels can receive: **CREDIT**, **EXTRA BALL**, or **SPECIAL**. Adjust to **NONE** if a replay award is not desired.

End of Game Features

Game Endings

When all player(s) have played all balls (including any Extra Balls), the game ends. If power is interrupted during the course of a game, it will end that game (***see Starting a Normal Game***). Closure of the Plumb Bob Tilt Switch according to the number of tilts set, **Standard Adj. 22, Tilt Warnings** (Default = **2**) or prolonged closure, will end the current Ball-In-Play. Closure of the Slam Tilt Switch on the Coin Door ends the current game(s).

Match Feature

At the end of each ball, earned bonuses are collected. At the end of the last ball of a game (including any extra balls, if applicable), earned bonuses are collected, then the system produces a random 2-digit number (a multiple of 10; 00 to 90). Matching the last 2 digits of the player's score with this number awards a credit. In **Std. Adj. 20, Match Percentage** (Default = **9%**) can be changed from 0-10%. Changing the percentage to **0% displays** the *"Match Animation"* at the end of the game, however, will never match nor award anything. Changing this adjustment to **OFF** will **not display** the *"Match Animation"* nor award anything.

Entering Initials/Name

If player achieved a new *High Score* in a game or achieved a *Special Feature (if given)* the player may enter 3 Initials. In **Std. Adj. 40, HSTD (High Score To Date) Initials** (Default = **3 Initials**) can also be changed to **10-Letter Name**. Use the **Flipper Buttons** to choose a letter or character as seen on the Dot Display. Hitting the **Start Button** locks in the letter or character and proceeds to the next letter. The game then proceeds into the ***Game-Over Mode*** and then to the ***Attract Mode***.

Note: **Standard Adj. 44, *Custom Message*** *(Default = **ON**) can be displayed during the Attract Mode; enter letters in the same fashion. For more details on Adjustments, see Section **3**, Chapter **4**.*

Continued Next Page.

Auto Percentaging

This game is equipped with Auto Percentaging, **Standard Adjustment (Adj.) 1, Replay Type** (Default = **AUTO**, *adjustable*). The *Replay Percent* is automatically adjusted, **Standard Adj. 2, Replay Percentage**, or you can set a *Fixed Replay Score*. Four levels may be selected. Adjustments allow awarding of a "CREDIT" (or your setting) as each level is exceeded. This can be adjusted with, **Standard Adj. 3, Replay Award** (Default = **CREDIT**). With the ***Autopercentage Feature***, if the actual replay percentage is higher or lower than that desired, the game will automatically adjust for the new recommended percentage score(s). You may choose to make a different "score-to-beat" adjustment; this is done by utilizing **Standard Adj. 4, Replay Levels**. *For more details with **Adjustments**, see Section **3**, Chapter **4**, **GO TO ADJUSTMENTS MENU**; also, see see Section **3**, Chapter **5**, **GO TO INSTALLS MENU** (via the **UTILITIES MENU**) for further customization of your Pinball Game.*

Instruction Card

Below is a **COPY** of the Game Instruction Card (SPI Nr.: **755-5188-00-Y USA**). *For a replacement Game Instruction Card on Astrobright Solar Yellow Card Stock, add **-Y** to the end of the Part Number above.* If your card is lost or damaged, simply **COPY** this page and *cut out* the card as a *temporary replacement* until a *new card is ordered.*

(***Hint:*** **COPY & CUT** along the dotted line and fold in the center to keep the "COPY" sturdy.)

COPY & CUT

WORLD POKER TOUR™

To download the Game Instruction Card, visit our website @ www.SternPinball.com and click on the "World Poker Tour" or "Game Archive" Pop Bumper Link, then click "Instruction Card, ... (Multi-Language)"

FOLD HERE

Click on card to open the Instruction Card for printing.

WORLD POKER TOUR

TEXAS HOLD 'EM
Shoot the ramps to collect the FLOP, TURN and RIVER (when lit) to advance in WPT events .

POKER HANDS
Shoot drop targets to Light Poker Hands (one pair, three of a kind, etc.).

ACE-IN-THE-HOLE MULTIBALL
Hit the bars on upper playfield to raise them. Shoot into hole to lock ball. After ball is locked, hit captive ball to start Multiball.

NO LIMIT MULTIBALL
Shoot the LIGHT LOCK target on lower playfield to light green LOCK arrows. Lock 3 Balls to start Multiball.

EXTRA BALL
Win cities/countries to light Extra Ball.

WPT™ WORLD POKER TOUR

© WPT Enterprises, Inc. WPT, World Poker Tour, and Spade Card Design are trademarks of WPT Enterprises, Inc. All Rights Reserved. Bee Royal Face Card Designs used are © 2005-2006 The United States Playing Card Company. All Rights Reserved. Printed in the USA.

755-5188-00-Y USA

Table of Contents
for Section 3

SERVICE MENU

Chapter 1, Service Menu Introduction ..... 8 – 12

- **Table of Contents for Section 3** 7
- **Service Swtich X4 Set Acces & Use** 8
  - ▷ Function 1: SERVICE CREDITS MENU ▷ Function 2: VOLUME MENU ▷ Function 3: SERVICE MENU
- **Service Menu Introduction** 9
  - ▷ How to Use This Section
- **World Poker Tour™ Pinball Service Menu Icon Tree** 10-11
- **Exit Service Menu** 12
  - ▷ Problem / Solution Table

Chapter 2, GO TO DIAGNOSTICS MENU ..... 13 – 20

- **Go To Switch Menu** 14
  - ▷ Switch Test ▷ Active Switch Test
- **Go To Coil Menu** 15
  - ▷ Single Coin Test ▷ Cycling Coil Test
- **Go To Flash Lamps Menu** 15
  - ▷ Single Flash Lamp Test ▷ Cycling Flash Lamp Test
- **Go To Lamp Menu** 16
  - ▷ Single Lamp Test ▷ Test All Lamps ▷ Lamp Row Test ▷ Lamp Column Test
- **Ball Trough Test** 17
- **Technician Alerts** 17-18
  - ▷ Switch Detection ▷ Pinball Detection ▷ Tech Report Alert Option
- **Fire Knocker ▶ Sound / Speaker Test ▶ Begin Burn-In** 19
- **Dot Matrix Test** 20

Chapter 3, GO TO AUDITS MENU ..... 21 – 24

- **Earnings Audits [#1 – #13 Definitions]** 21
- **Standard Audits [#1 – #59 Definitions]** 22-23
- **Feature Audits [#1 – #164]** 24
- **Tournament Aduits [#1 – #14]** 24

Chapter 4, GO TO ADJUSTMENTS MENU ..... 25 – 34

- **Standard Adjustments [#1 – #61]** 25-31
- **Feature Adjustments [#1 – #44]** 32-34

Chapter 5, GO TO UTILITIES MENU ..... 35 – 40

- **Go To Installs Menu** 35-38
  - ▷ Install Extra Easy ▷ Install Easy ▷ Install Medium ▷ Install Hard ▷ Install Extra Hard ▷ Install 3-Ball ▷ Install 5-Ball
  - ▷ Install Competition ▷ Install Directors Cut ▷ Install Home Play ▷ Install Novelty ▷ Install Add-A-Ball ▷ Install Fatory
- **Enter Custom Message** 39
- **Set Custom Pricing** 39
- **Set Date / Time** 40
- **Go To Resets Menu** 40
  - ▷ Reset Coin Audits ▷ Reset Game Audits ▷ Reset Grand Champion ▷ Reset High Scores ▷ Reset Credits
  - ▷ Reset Factory Settings
- **Go To USB Menu** 40
  - ▷ Dump to USB Memory Stick ▷ Update Game Code ▷ Backup to USB Memory Stick

Chapter 6, GO TO TOURNAMENT MENU ..... 41 – 42

- **Start Tournament** 41
- **Stop Tournament** 41
- **View Tournament Data** 41
- **Tournament Audits // Sign Messages A-B** 42

Service Switch X4 Set Access & Use

The **4-Button Service Switch Set** provides access for ***three (3) functions*** available for your use: **1: SERVICE CREDIT**, **2: VOLUME [–] / [+]** and **3: SERVICE MENU**.

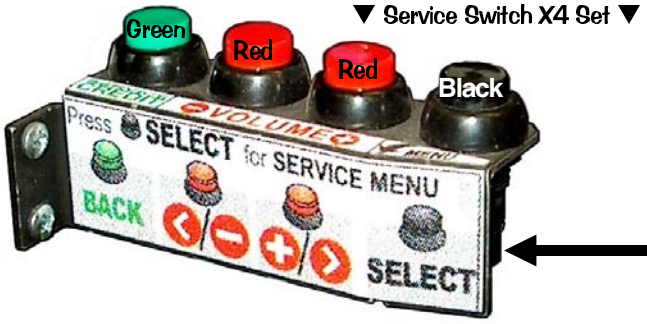

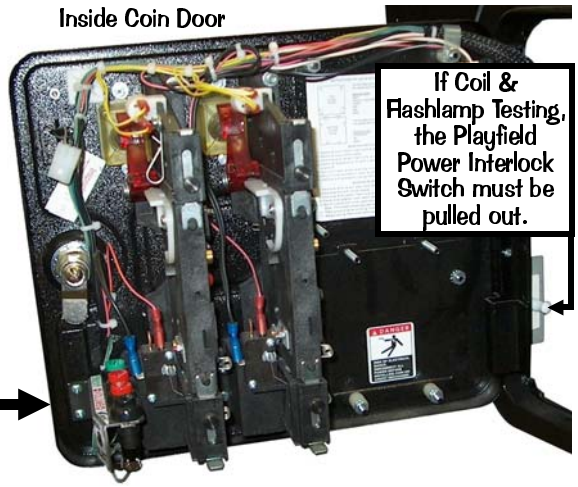

To access any of these ***three (3) functions*** you must first open the **Coin Door** *(see pictorial above)* with the Game in the ***Attract Mode*** *(not already in any Function or Menu stated below) and then follow below.*

*Pushing the **GREEN** **BUTTON** first.*

◀ Function 1: SERVICE CREDITS MENU

Pushing the **Green [SERVICE CREDIT] Button** first, adds a ***Service Credit*** per push *(will not affect your audits as "paid" credits).* This is useful for the technician to test games in regular play without affecting the game audits. Each depression adds **1 credit**; up to **50 credits** can be applied. **Standard Adjustment 23**, **Credit Limit**, determines this, however, it can be changed from 04-50; *for details see Chapter **4** of this Section **3**.*

Note: *Once your credits are added, this menu will **automatically exit** a few seconds after the last button depression or when the **Green [BACK]** or **Black [SELECT] Button** is pushed. This function is disabled if **Standard Adjustment 42, Free Play**, is set to **YES**. The Service Credits are limited to the Credit Limit in addition to any paid credits present in the game (e.g. If the Credit Limit is 30, with 8 paid credits present, only 22 Credits can be applied.).*

*Pushing either **RED** **BUTTON** first.*

*Pushing either **RED** **BUTTON** first.*

▲ Function 2: VOLUME MENU ▲

Pushing either of the **Red [VOLUME] Buttons** first, enters the ***VOLUME MENU***. While in this Mode, to **DECREASE** the volume, hold down or depress the **1st Red [< / –] Button** until desired the volume is achieved; to **INCREASE** the volume, hold down or depress the **2nd Red [+ / >] Button** until the desired volume is achieved.

Note: *The volume can be set between **0-63**; Once your adjustments are made, this menu will **automatically exit** a few seconds after the last button depression or when the **Green [BACK]** or **Black [SELECT] Button** is pushed.*

◀ Function 3: SERVICE MENU

Pushing the **Black [SELECT] Button** first, enters the ***SERVICE MENU***. Once in, navigate through all menus by depressing the **Service Menu Buttons**. Use the **Red [< / –]** *or* **[+ / >] Buttons** to move LEFT / RIGHT, NEXT/PREVIOUS *(audits/adjustments) or* to INCREASE / DESCREASE an adjustment (setting). Use the **Black [SELECT] Button** to select a highlighed *Icon*, move to the next line of text *or* to answer "**OK**" where applicable. Use the **Green [BACK] Button** to exit *or* escape back.

Please read *Section **3**, Chapters **2-6**, for explanation on all **Icons** and **Menus**. **Read! Read! Read!***

Service Menu Introduction

Important: The ***Switch Bracket*** holds the ***Playfield Power Interlock***. It is located just inside the Coin Door frame *(see pictorial of the **Coin Door** on the previous page)*. The Button Switch for the ***Playfield Power Interlock Switch*** must be pulled out for electro-mechanical device testing or diagnostic purposes *(this is required)*. If this button is pushed in, the ***Playfield Power*** is disabled while the **Coin Door** is **OPEN**.

How to Use This Section

This section will cover all functions available in the **SERVICE MENU** in a *Step-By-Step* process. This section is divided into **chapters** which coincide with the **MAIN MENU** *(will also provide more detailed information)*. The previous and following pages in this Chapter will instruct the operator on how to move through the Menus. *It's simple, easy and fun to use!*

To get into the **SERVICE MENU MODE** review **"Function 3: SERVICE MENU"** on the previous page. After Power-Up, push down the **Black [SELECT] Button** to begin. Looking at the display you will momentarily see "**SERVICE MENU**" followed by the **MAIN MENU**:

Use the **Red [</–] / [+/>] Buttons** to move the selected ***Icon*** left or right, and the **Black [SELECT] Button** to activate the selected ***Icon***.

The **MAIN MENU** now appears with the "DIAG" *Icon* (**GO TO DIAGNOSTICS MENU**) highlighted:

As the operator views the Menu Screen(s), the MORE MORE symbols indicates that there are more *Icons* to select in each direction. The *Icon* selected will blink. Pushing the **Black [SELECT] Button** will select the *Icon* and the Menu Screen will change to the menu selected. Select the **Green [BACK] Button** to move backwards through the menu levels. Press the **Green [BACK] Button** repeatedly or select the **"QUIT"** *Icon* to completely exit the **SERVICE MENU** Mode.

View the **SERVICE MENU Icon Tree** on the next pages for a complete overview of all menus used in this system. The "HELP" *Icon* provides an explanation of **ICON** usage or any other information in the Menu where the "HELP" *Icon* was selected *(when available)*.

DIAG: GO TO DIAGNOSTICS MENU | **AUD:** GO TO AUDITS MENU | **ADJ:** GO TO ADJUSTMENTS MENU
UTIL: GO TO UTILITIES MENU (INSTALLS, CUSTOM MSG., CUSTOM PRICING, SET TIME, RESET & USB)
TOUR: GO TO TOURNAMENT MENU (START TOURNAMENT, VIEW TOURNAMENT DATA, SIGN MESSAGES)

>> TO UPDATE THE GAME CODE, REVIEW THE STEPS ON THE INSIDE FRONT COVER OF THIS MANUAL.

Use both the manual and the display to help customize, troubleshoot and/or diagnose faults, if any.

World Poker Tour™ Pinball Service Menu Icon Tree

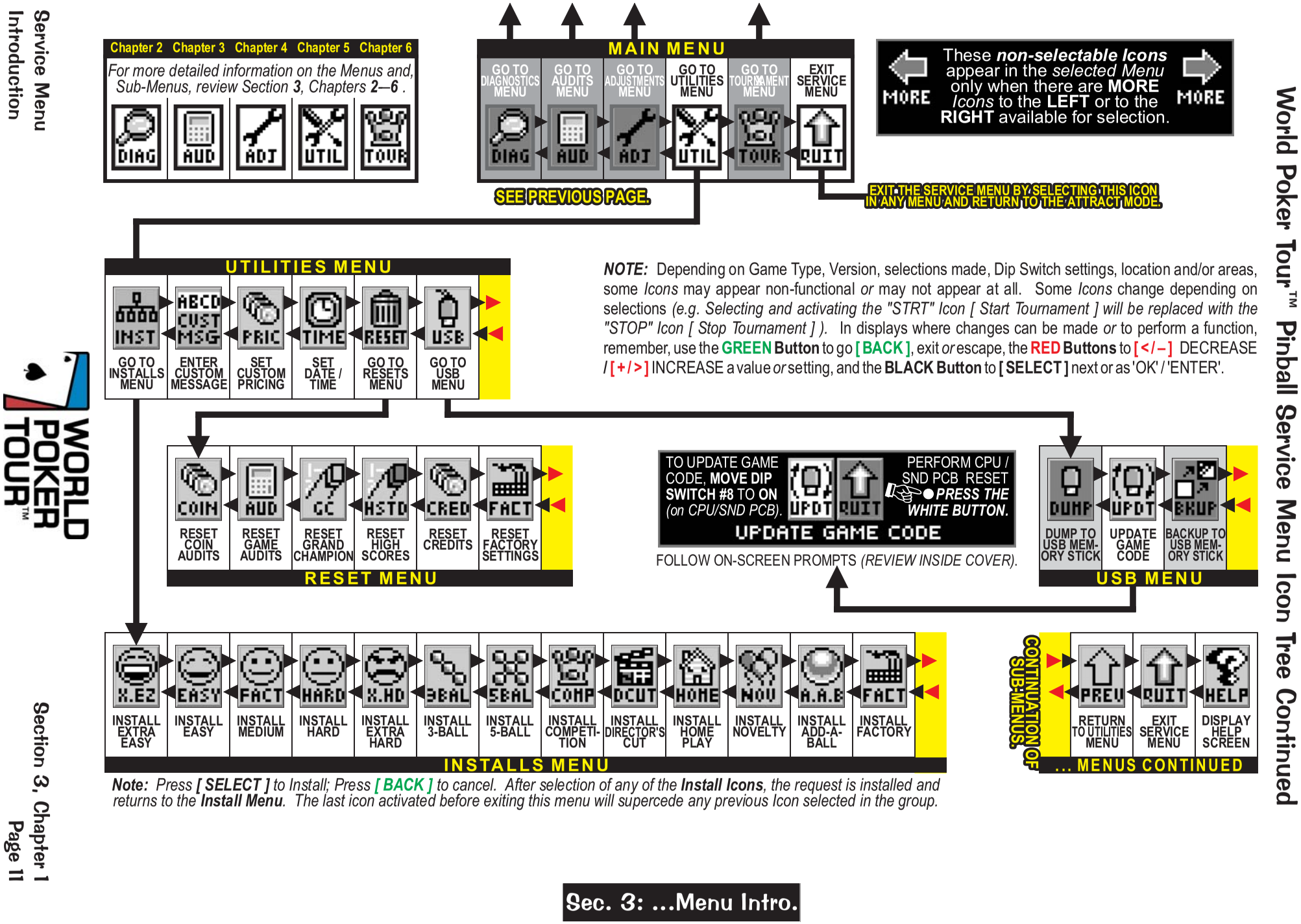

Note: Press [SELECT] to Install; Press [BACK] to cancel. After selection of any of the Install Icons, the request is installed and returns to the Install Menu. The last icon activated before exiting this menu will supercede any previous Icon selected in the group.

Exit Service Menu

In the **MAIN MENU** and in all **SUB-MENUS** *(where the "QUIT" Icon is present)*, if the "QUIT" *Icon* is selected and *activated*, or the **Green [BACK] Button** is selected repeatedly *(depending on which sub-menu you're in...),* the **SERVICE MENU Session** will be exited and returned to the ***Attract Mode***.

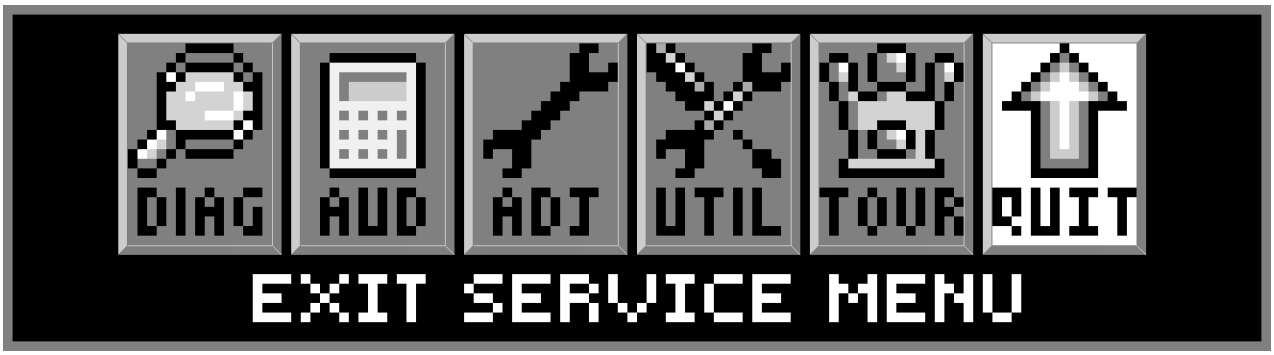

LOOK

Turning the game on/off will start the *Power-Up Routine.* Upon **Power-Up**, the DISPLAY will indicate the COUNTRY, FILE VERSION and LANGUAGE(S) installed. LANGUAGE/COUNTRY: change via Dip Switch.

LOOK

The below **Problem / Solution Table** was designed to answer some common problems frequently asked.

Problem / Solution Table

PROBLEM	SOLUTION
Will not enter the **SERVICE MENU** after depressing the **Black [SELECT] Button**.	• Check the Service Switches **[** GREEN, RED (X2) & **BLACK Buttons**] for loose connections or bad ground. • Check the associated wiring harness to/from the CPU/Sound Board, Connector **J13**. • Check CPU/Sound Board for possible failure.
All **Service Buttons [** • • • • **Buttons]** appear nonfunctional.	• Check the Service Switches wiring harness for poor or no connection and/or broken wires.
The **Green Button** in the Attract Mode will not enter the **SERVICE CREDITS MENU** to add Service Credits.	• Check to make sure the Game is not in "**Free Play**." *If the game is set to Free Play, adding Service Credits is not required.* • Check the Service Switches wiring harness for poor or no connection and/or broken wires.
The **Display** "blanks out."	• Check the Dot Matrix Display for loose wiring harness for poor or no connection and/or broken wires. • Check **F1** (3/4A Fuse) on the Display Power Supply Board. Refer to Section **5**, **SCHEMATICS & TROUBLESHOOTING**.
Icons *"scroll"* along continuously in the **MAIN MENU**.	• Check for a stuck switch on either of the **Red Buttons**.
The **Start** and **Flipper Buttons** do not select or activate *Icons* in the **SWITCH TEST MENU**.	• This is normal. These switches are deactivated, as they are a part of the Switch Test. Refer to Section **3**, Chapter **2**, **GO TO DIAGNOSTICS MENU**, **Switch Test**.
Can't move selection of *Icon* with the **Left** and/or **Right Flipper Buttons**.	• Check the **Flipper Buttons** for loose connections or bad Ground and refer to Section **5**, Chapter **2**, Playfield Wiring, #-Flipper Circuit Wiring Diagram. • This is normal ***only*** in ***Diagnostic's Switch & Active Switch Tests*** *(see previous Problem).*
Some *Icons* appear non-functional in the **MENU** or missing.	• Some functionality of the Service Menu may not have been completed during development. If exists, it should only be a non-critical function, such as the "HELP" *Icon,* which will explain the usage of icons. When completed, a software update will correct the problem. Software updates are announced via Service Bulletins (if critical) and on our website **http://www.sternpinball.com/GAME-code.shtml**; view the Game Code Library Message Board Marquee or click **Previous Messages** for past announcements.
In **COIL TEST MENU**, the coils and flashlamps ***do not*** fire after pressing the **Black [SELECT] Button**.	• Ensure the **POWER INTERLOCK SWITCH *is pulled out*** *(see the start of this Chapter).*
In the **SERVICE MENU**, the volume cannot be adjusted with either of the **Red Buttons**.	• The Volume adjustment can only be made when in the **Attract Mode** *(see the start of this Chapter).*
In the **SERVICE MENU**, the display seems to lock up, or the Help Display appears to be non-functional.	• If you cannot clear the situation by exiting back one Menu, exit completely out of the **SERVICE MENU**, and re-enter. If the problem persists, call Technical Support for additional help.

IF YOU NOTE ANY OTHER PROBLEMS or HAVE ANY SYMPTOMS NOT DESCRIBED ABOVE, PLEASE CALL TECHNICAL SUPPORT 800-542-5377 (708-345-7700 OPTION #1), SO WE MAY ASSIST YOU.

To initiate, from the **MAIN MENU**, select the "DIAG" *Icon*. The **DIAGNOSTICS MENU** provides tests for switches, coils, flash lamps, lamps, sounds and dots in the Dot Matrix Display. Each feature may be tested manually or automatically after entering the **SERVICE MENU** *(see Section **3**, Chapter **1**, Service Menu Introduction)*. The **[CYCLING COIL TEST]** / **[FLASH LAMP TEST]** may be used for a quick verification of automatic test functions. The **[SWITCH TEST]** / **[SINGLE COIL TEST]** / **[SINGLE LAMP TEST]** / **[TEST ALL LAMPS]** / **[LAMP ROW TEST]** / **[LAMP COLUMN TEST]** / **[FLASH LAMP TEST]** may be used for troubleshooting.

All **DIAGNOSTICS MENU** *Icons* and there usages are explained throughout this chapter in the same order as seen in the Dot Matrix Display. ***NOTE:*** Depending on Game Type, Version, selections made, Dip Switch settings, location and/or areas, some *Icons* may appear non-functional *or* may not appear at all. Some *Icons* change depending on selections *(e.g. Selecting and activating the "STRT" Icon [Start Tournament] will be replaced with the "STOP" Icon [Stop Tournament]).* ***Icons** and/or **functions**, **order** and **operation are subject to change**.*

In displays where changes can be made *or* to perform a function, use the **GREEN Button** to go **[BACK]**, exit *or* escape, the **RED Buttons** to **[< / –]** MOVE BACK / LEFT / DECREASE **/ [+ / >]** MOVE FORWARD / RIGHT / INCREASE a value *or* setting, and the **BLACK Button** to **[SELECT]** next *or* as "OK / ENTER / ENERGIZE."

Important:** Upon **Power-Up** (Game CPU Reset) or opening the **Coin Door** watch the **Display** for any **Alerts.*

This ***audible / visual alert display*** is shown when the **50V / 20V Power** is disabled *(by opening the Coin Door)*. **PULL OUT THE INTERLOCK SWITCH *ONLY* WHILE IN THE SERVICE MENU FOR COIL OR SWITCH TESTING & BURN-IN WHEN THE COIN DOOR IS REQUIRED TO STAY OPEN FOR SERVICE BUTTON USE!** Pulling out the Power Interlock Switch or pressing the 'escape' **Green [BACK] Button** will remove the alert display. Initial display presentation is accompanied by 3 audible tones *(the bright display warning will go dim after approximately 30 seconds).*

This ***alert display*** is shown momentarily during **Game Mode** or **Power-Up** to alert the operator of a coil malfunction *(coil doesn't energize or coil fires a multiple number of times)*. **OPERATOR ALERT!** works by monitoring any *switch activated coil* that has the potential to trap a ball when disabled *(e.g. in the Auto Launch, Scoop, Eject, etc.)*. This alert can also appear if a switch associated with a coil *(e.g. #1 Trough Up-Kicker, #2 Auto Launch, etc.)* is stuck closed *(caused by a switch jam or stuck ball)*; the **CPU/Sound Board** will activate the coil approximately ten times and if the switch remains closed, the game will report this switch in **Technician Alerts** & will indicate the *following display warning:*

If this ***Tech Report Alert flashes** (along with an audible sound),* the game has detected faulty switches and/or missing pinballs. Select the "TECH" *Icon* for information *(review Sec. **3**, Chapter **2**, Pages **17-18**, **Technician Alerts**). For this **Alert display** to appear, Standard Adj. **62**, Tech Alert Warning, **must be changed** to **POWERUP**, **COIN DOOR** or **POWERUP AND COIN DOOR**. The default is **NEVER** (review Section **3**, Chapter **4**, **GO TO ADJUSTMENTS MENU**, Standard Adjustments).*

CAUTION! Remove all pinballs from the Ball Trough prior to lifting the playfield to it's full upright position for servicing. **PULL OUT** the **Power Interlock Switch** for operation. To eject pinballs, select the "DIAG" *Icon* from the **MAIN MENU** to enter the **DIAGNOSTICS MENU**. Select the "CLR" *Icon* to enter the **BALL TROUGH TEST MENU**. Press the **Black [SELECT] Button**. To return to the **DIAGNOSTICS MENU**, press the **Green [BACK] Button**. *This feature also useful to retrieve a pinball for game testing in **Switch** or **Coil Tests**.*

Go To Switch Menu

To initiate, from the **DIAGNOSTICS MENU**, select the "SW" *Icon*. Switches are configured in an 4 X 16 Matrix of Rows [Switch Drives] and Columns [Switch Returns] with up to **64** possible switches. Dedicated Switches are configured in a 2 X 16 Matrix of Rows [Dedicated Switch Drives / Ground] and Column [Ded, Switch Returns] with up to **32** possible dedicated switches *(includes the 8 dip switch positions).* The **SWITCH TEST MENU** consists of two (2) parts: **Switch Test** and **Active Switches** to test ***all*** switches.

Reminder: *The* ***Flipper & Start Buttons*** *(part of Switch Tests) are temporarily disabled as* ***Service Menu Navigation Buttons*** *during these test(s) so they can be tested and shown on-screen. Pressinng the* ***Green [BACK] Button*** *(Dedicated Switch* ***D-21****), Light Green-Black / Black (GND), will exit* ***Switch Test*** *or* ***Active Switch Test****.*

Upon entering **Switch Test**, you will notice that some switches are already indicated as 'closed'. ▶

Switch Test

To initiate, from the **SWITCH MENU**, select the "TEST" *Icon*. Ensure the **Power Interlock Switch** is pulled out if testing with the Coin Door open and the activation of coils is required. Upon entering **Switch Test**, you will notice that some switches are already indicated as closed. In the examples, the 4-Ball Trough Switches **#18**, **#19**, **#20** & **#21** are shown closed *(pinballs at rest in the ball trough),* along with the Flipper E.O.S. Dedicated Switches **D-10** & **D-12** (End-of-Stroke Switches are 'normally closed'). If the game has more flippers with E.O.S. Dedicated Switches, CPU Dip Switch Setting *other than* 1-8 OFF or switches stuck closed, more dots will be indicated *(enter* ***Active Switch Test*** *to reveal the names).*

D-24 position is highlighted and accompanied by a short audible tone when pressed. ▼

After pressing the switch *(to make it close)*, the display will indicate the last switch number. ▼

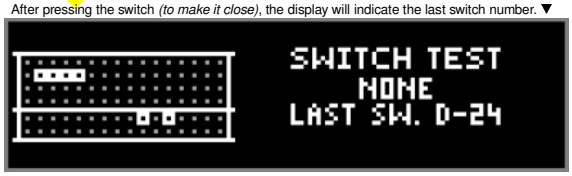

In **Switch Test**, close each switch and observe the display *(switch closure is accompanied by a short audible tone).* In the example, the **Black [SELECT] Button** Dedicated Switch **D-24** is pressed. The Dot Matrix Display will light up *(highlight)* the corresponding *dot* in the on-screen matrix, display the *switch name*, *switch number* and the *Switch Drive / Return wire colors*. When not closing a switch, the display indicates **NONE** and the last switch number closure. For the Switch Matrix Grid and Dedicated Switch Grid, see **Find-It-In-Front: Dr. Pinball, DR.** ❹ *or* escape out of this test and enter **Active Switch Test** *(described below)* to view the names of the switches closed. ***Note:*** *Pressinng the* ***Green [BACK] Button*** *(Dedicated Switch* ***D-21****), Light Green-Black / Black (GND), will exit the* ***Switch Test****.*

CAUTION! COIL MECHANISMS WHEN ACTIVATED HAVE FAST MOVING PARTS! While performing **Switch Test** with the Coin Door closed *or* with the Coin Door open *(with the Power Interlock Switch is pulled out)*, **DO NOT USE YOUR FINGER** to test switches which are associated with a coil mechanism such as Vertical Up-Kicker *(hole with a switch)*, Slingshots, Bumpers, etc..

Typical Switch Wiring & Schematic

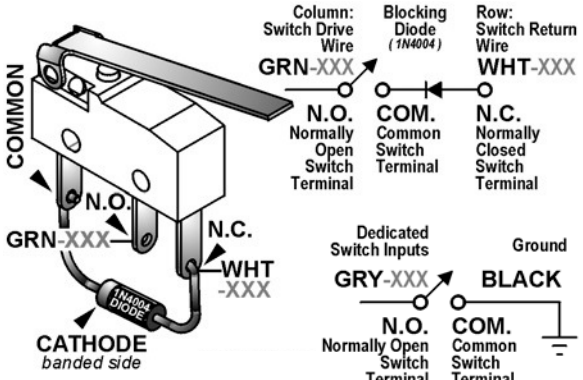

-XXX = Varying Wire Color.
See Matrix Grid for color.

Dedicated Switch Schematic

... Ded. Switch **D-24** is held down. The display will cycle and flash each dot, naming each switch ... closed. ▶

Active Switch Test

To initiate, from the **SWITCH MENU**, select the "ACT" *Icon*. In **Active Switch Test**, if any switches are stuck closed *(or normally closed from the presence of pinball(s) as in the Ball Trough),* the display will flash the corresponding dot(s) in the on-screen matrix, display the *name* and the *Switch Drive / Return wire colors*. If more than one switch is closed, the switch information will change with each switch. This cycle continues until all switches are cleared *or* until **Active Switch Test** is exited. In the example, the **Black [SELECT] Button** Dedicated Switch **D-24** is pressed and held down. The display will cycle and flash each dot, naming each switch which is closed. To determine the *switch number,* compare the highlighted dot to the same position in the Switch Matrix Grid to determine its' number, see **Find-It- In- Front: Dr. Pinball, DR.** ❹.

Go To Coil Menu

To initiate, from the **DIAGNOSTICS MENU**, select the "COIL" *Icon.* Coils **#01 – #16** are typically High Current Coils *(although Low Current Coils may be used in these positions & will be noted).* Coils **#17 – #32** are typically Low Current Coils. Flash Lamps are typically used in positions **#25 – #32** *(although Flash Lamps may be used in any position and will be noted).* Auxiliary Coils may be used in positions **#33 – #35**.

Remember, use the **GREEN Button** to go **[BACK]**, exit *or* escape, the **RED Buttons** to **[< / –]** GO BACK **[+ / >]** GO FORWARD, and the **BLACK Button** to **[SELECT]** ENERGIZE the coil *(solenoid)* or flash lamp.

Single Coil Test

To initiate, from the **COIL MENU**, select the "TEST" *Icon*. Ensure the **Power Interlock Switch** is pulled out if testing with the Coin Door open. Upon entering **Single Coil Test**, you will notice the #1 coil is shown. The Dot Matrix Display will indicate the *coil or flash lamp name*, *coil (solenoid) or flash lamp number* and the *Coil or Flash Lamp Power Line / Drive Transistor Control Line wire colors*. To determine the "Pin-Outs" from the I/O Power Driver Board, the Coil Voltage Gauge-Turns *(e.g. 23-800)* or lamp type *(e.g. #89 or #906 Bulb)*, view the Coils Detailed Chart Table, see **Find-It-In-Front: Dr. Pinball, DR.** ❽ *or* for more on troubleshooting and diagnosing, see Section **5**.

Typical Coil Wiring & Schematic

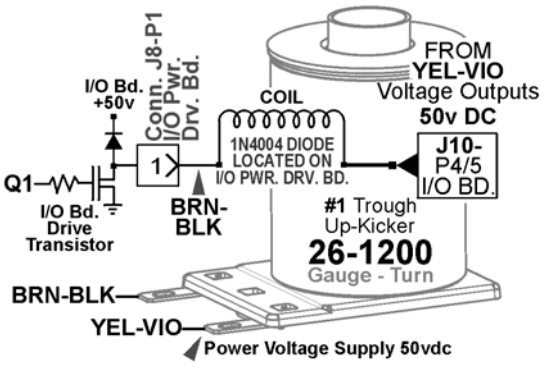

Cycling Coil Test

To initiate, from the **COIL MENU**, select the "CYC" *Icon*. Ensure the **Power Interlock Switch** is pulled out if testing with the Coin Door open. The test pulses each regular coil or flash lamp sequentially *(cycling)* on the Playfield and in the Backbox *(if coils or flash lamps are used).* The Dot Matrix Display indicates the same information you will find in **Single Coil Test**.

Go To Flash Lamps Menu

To initiate, from the **DIAGNOSTICS MENU**, select the "FLASH" *Icon*. The two tests allows the technician to easily spot any burned-out flash lamps and replace them. Unlike **Single Coil Test**, which tests ***all*** coil *(solenoids)*, including flash lamps, **Single** and **Cycling Flash Lamp Tests**, test only the flash lamps used in the game. Flash Lamps are typically used in positions **#25 – #32** *(although Flash Lamps may be used in any position and will be noted).*

Remember, use the **GREEN Button** to go **[BACK]**, exit *or* escape, the **RED Buttons** to **[< / –]** GO BACK / **[+ / >]** GO FORWARD, and the **BLACK Button** to **[SELECT]** ENERGIZE the flash lamp.

Single Flash Lamp Test

To initiate, from the **FLASH LAMPS MENU**, select the "TEST" *Icon*. Ensure the **Power Interlock Switch** is pulled out if testing with the Coin Door open. Upon entering **Single Flash Lamp Test**, you will notice the first Flash Lamp is shown. The Dot Matrix Display will indicate the *flash lamp name*, *flash lamp number* and the *Flash Lamp Power Line / Drive Transistor Control Line wire colors*. To determine the "Pin-Outs" from the I/O Power Driver Board or lamp type *(e.g. #89 or #906 Bulb)*, view the Coils Detailed Chart Table, see **Find-It-In-Front: Dr. Pinball, DR.** ❽ *or* for more on troubleshooting and diagnosing, see Section **5**.

Bulb Types used for Flash Lamps

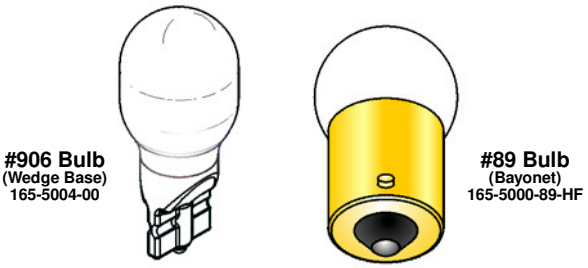

Cycling Flash Lamp Test

To initiate, from the **FLASH LAMPS MENU**, select the "CYC" *Icon* . Ensure the **Power Interlock Switch** is pulled out if testing with the Coin Door open. The test pulses each flash lamp sequentially *(cycling)* on the Playfield and in the Backbox *(if flash lamps are used).* The Dot Matrix Display indicates the same information you will find in **Single Flash Lamp Test**.

Go To Lamp Menu

To initiate, from the **DIAGNOSTICS MENU**, select the "LAMP" *Icon*. Controlled lamps are configured in and 8 X 10 Matrix of Rows [Lamp Returns / Ground] and Columns [Lamp Drives / 18VDC] with up to **80** lamps possible. The **LAMP TEST MENU** consists of five (5) parts: **Single Lamp Test**, **Test All Lamps**, **Row Lamp Test**, **Column Lamp Test** and **Ordered Lamp Test** to test ***all*** lamps.

Remember, use the **GREEN Button** to go **[BACK]**, exit *or* escape, the **RED Buttons** to **[< / –]** GO BACK / LEFT **/ [+ / >]** GO FORWARD / RIGHT, and the **BLACK Button** to **[SELECT]** next *or* as "OK / ENTER."

Single Lamp Test

Upon entering **Single Lamp Test**, ... the #1 lamp is shown. .... Display will light up ... the *dot* ... ▶

To initiate, from the **LAMP MENU**, select the "ONE" *Icon*. As each lamp is selected, the lamp will light at it's location on the playfield as well as the Dot Matrix Display. Upon entering **Single Lamp Test**, you will notice the #1 lamp is shown. The Dot Matrix Display will light up *(highlight)* the corresponding *dot* in the on-screen matrix, display the *lamp name*, *lamp number* and the *Lamp Return / Drive wire colors*. For the Lamp Matrix Grid, see **Find-It-In-Front: Dr. Pinball, DR. ❻**, at the beginning section of this Service Game Manual.

Test All Lamps

Upon entering **All Lamps Test**, ... the Dot Matrix Display is flashing "**ALL LAMPS ON**" ... ▶

To initiate, from the **LAMP MENU**, select the "ALL" *Icon*. Upon entering **All Lamps Test**, you will notice the Dot Matrix Display is flashing **ALL LAMPS ON** and the lamps on the playfield will be lit, alternating between the rows in the Lamp Matrix Grid. The Dot Matrix Display will light up *(highlight)* all of the *dots* in the on-screen matrix.

Lamp Row Test

Upon entering **Row Lamps Test**, you will notice the #1 lamp row is shown. ▶

To initiate, from the **LAMP MENU**, select the "ROW" *Icon*. As each lamp row is selected, the lamps in the row will light on the playfield as well as the Dot Matrix Display. Upon entering **Row Lamps Test**, you will notice the #1 lamp row is shown. The Dot Matrix Display will light up *(highlight)* the corresponding row of *dots* in the on-screen matrix, display the *lamp row number*, the *Lamp Return wire colors,* the *I/O PCB Connector* and *transistor number*.

Lamp Column Test

Upon entering **Column Lamps Test**, you will notice the #1 lamp column is shown. ▶

To initiate, from the **LAMP MENU**, select the "COL" *Icon*. As each lamp column is selected, the lamps in the colum will light on the playfield as well as the Dot Matrix Display. Upon entering **Column Lamps Test**, you will notice the #1 lamp column is shown. The Dot Matrix Display will light up *(highlight)* the corresponding row of *dots* in the on-screen matrix, display the *lamp column number*, *the Lamp Drive (18VDC) wire colors,* the *I/O PCB Connector* and *IC number.*

Bulb Types used for Control Lamps

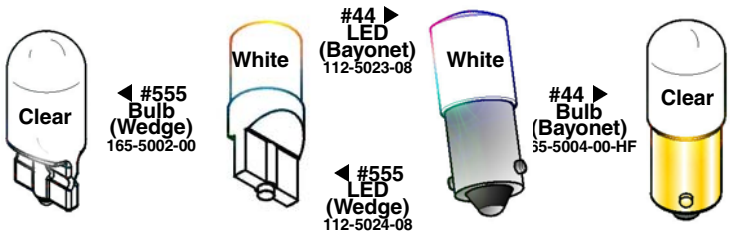

Typical Lamp Schematic & Wiring

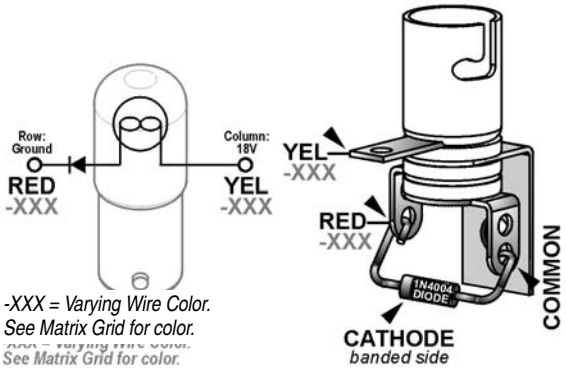

Ball Trough Test

To initiate, from the **DIAGNOSTICS MENU**, select the "CLR" *Icon*. This Menu is provided to allow the tech- nician a simple method of removing the balls from the trough and also, to test functionality of the trough, ensuring proper trough operation. Upon entering **Ball Trough Test**, you will notice that four switches are already indicated as closed. In the example, the 4-Ball Trough Switches **#18**, **#19**, **#20** & **#21** are shown closed *(pinballs at rest in the ball trough).* To return to the **DIAGNOSTICS MENU**, press the **Green [BACK] Button**.

Press the **Black [SELECT] Button** to eject the ball in the first position Switch **#21** (VUK OPTO Trough #1 (R)). Simultaneously, the Dot Matrix Display and the playfield will eject the ball to the Trough Up-Kicker, eject from the Trough Up-Kicker into the Shooter Lane, momentarily closing Switch ***#23*** *(Shooter Lane),* and is ejected onto the playfield where the technician can easily retrieve the pinball or allow the ball(s) to re-enter the trough to continue **Ball Trough Test**. The Dot Matrix Display indicates Switch **#18** (4-Ball Trough #4 (L)) as open as the remaining three (3) pinballs shift over one (1) position to the right. If the technician allows the ejected pinball to reenter the ball trough, the Dot Matrix Display will indicate Switch **#18** as closed. ***REMINDER:*** *Switch **#22** is the stacking OPTO switch; If more than five (5) pinballs are used, the additional switches will be noted. In this game, **four (4)** pinballs are used and required for proper operation.*

CAUTION! *Continuous use off the above test may overheat the Trough Up-Kicker Coil.*

Technician Alerts

To initiate, from the **DIAGNOSTICS MENU**, select the "TECH" *Icon*. This Menu is provided to show any switch problems and/or missing pinballs.

After selecting this *Icon*, and if game programming has detected any problems during game play, the display may indicate any pertinent information the technician may need to know, such as an alert to: **CHECK SWITCH** (Switch ***#23****, Shooter Lane, is used as an example).* If more than one switch is reported, the switch number and name will cycle within the category, and then will cycle the categories. To return to the **DIAGNOSTICS MENU**, press the **Green [BACK] Button**.

Switch Detection

During game play, activation of switches are monitored. In programming, if a switch is determined to be faulty, game play is compensated. The Dot Matrix Display may indicate to check a switch. Compare the switch number to the Switch Matrix Grid and Location (see **Find-It-In-Front: Dr. Pinball, DR. ❹**).

- Switch noted as **CHECK SWITCH** is determined to be stuck closed or open depending on switch usage. Free up the switch actuator adjust or replace if necessary.

Determination of switch usage can be checked in **Audits** *(review Sec. **3**, Chapter **3**, **GO TO AUDITS MENU**).* Find the associated Audit with the switch in question and check usage; compare it to commonly used switches for comparison. After any switch is checked and repaired or replaced, it's suggested to test the switch in the **Switch Test** *or* **Single Coil Test** *(reviewed earlier in this chapter, **Pages 14-15**)* where the associated coil to the switch can be tested as well. After correcting the problem, the switch will still be reported until the game is played and the switch is again monitored as specified above. *Only you can determine if a switch getting reported is bad or if the switch is currently not getting actuated during game play.*

Technicians Alerts (Pinball Detection) continued on the next page.

Pinball Detection

While in **Technician Alerts** Menu, if the following is displayed, the game has detected one (1) or more pinball(s) missing and has compensated for the lost pinball(s) to provide normal game play.

Important: *Determine where the pinball is!* ***Do not add pinball(s)*** *until it is determined the pinball(s) are indeed missing and not just stuck. If pinball(s) are added, and if the original stuck pinball has freed itself, the pinball game will not operate properly with the extra pinball(s). When the pinball is recovered, the above display* ***will not*** *appear the next time* ***Technician Alerts*** *is visited (a game must be played for the pinball to be determined as found).*

During game play, a ball can get trapped or stuck. If after approximately 15 seconds of inactivity or "no scoring," **Ball Search** is started. ***Note:*** *If the pinball is in the Plunger Lane or "held" on the flipper, no* ***Ball Search*** *will be performed.* The game will perform one **Ball Search** in an attempt to "find" or free-up the pinball.

If the game does not see a switch closure *(indicating the pinball has not been found),* the Dot Matrix Display may indicate **[LOCATING PINBALLS PLEASE WAIT ...]**, during which **Ball Search** will continue until the timer runs out *(this feature will not happen if the game is in Competition Mode; Ball Search will continue until the pinball is found, unstuck and/or replaced manually).* The display will momentarily acknowledge the missing pinball(s). The game will provide another pinball into play and will compensate for the lost pinball. Game play will appear normal.

Note: *This detection and compensation will happen with every pinball, if each suffers the same fate of a ball trap. If* ***all*** *balls get trapped, the game cannot be played or started until the situation is rectified.*

Tech Report Alert Option

This game has the capability of ***automatically alerting*** the operator upon **Power-Up** and/or opening the **Coin Door** if any switch problems and/or missing pinballs has occurred. For this ***Alert display*** *to appear, Standard Adjustment* ***62****, Tech Alert Warning,* ***must be changed*** *to* ***POWERUP****,* ***COIN DOOR*** *or* ***POWERUP AND COIN DOOR****. The default is* ***NEVER*** *(review Section* ***3****, Chapter* ***4****,* ***GO TO ADJUSTMENTS MENU****, Standard Adjustments).*

Upon **Power-Up** *(Game Reset)* and/or opening the **Coin Door** *(depending on the option selected)*, this ***display*** will flash three (3) times along with an audible sound. To find out the problem, enter this **Technicians Alert Menu** and wait for the displays.

Note: Coils ***are not reported*** in **Technician Alerts**, ***however****, if a faulty switch is the culprit, the switch will then be reported.* The below ***display*** is shown momentarily during **Game Mode** or **Power-Up** to alert the operator of a coil malfunction *(coil doesn't energize or coil fires a multiple number of times).* **" OPERATOR ALERT! "** works by monitoring any *switch activated coil* that has the potential to trap a ball when disabled *(e.g. in the Auto Launch, Scoop, Eject, etc.).* This alert can also appear if a switch associated with a coil *(example shown is #2 Auto Launch)* is stuck closed *(caused by a switch jam or stuck ball)*; the **CPU/Sound Board** will *activate* the coil approximately ten times and if the switch remains closed, the game will report this switch in **Technician Alerts** as **CHECK SWITCHES**. *The display alert* ***" PLEASE CHECK TECH REPORT "*** *will be shown (****o n l y i f*** *any one of the following settings is selected in Standard Adjustment* ***62*** *:* ***POWERUP****,* ***COIN DOOR*** *or* ***POWERUP AND COIN DOOR****).*

Fire Knocker

FACTOID: *The knocker got it's name from the 'original knocker' (20th century pinball games), which used a coil and when energized (fired), the plunger would strike a wood panel inside the cabinet.*

To initiate, from the **DIAGNOSTICS MENU**, select the "KNO- CKER" *Icon*. The digitally mastered "Knocker" is sounded. The *knocker sound* is used to alert the player if he/she has received a special, replay or a credit from the Match Award feature. Press the **Black [SELECT] Button** to activate the knocker. To return to the **DIAGNOSTICS MENU**, press the **Green [BACK] Button**.

Sound / Speaker Test

To initiate, from the **DIAGNOSTICS MENU**, select the "SPKR" *Icon*. This system produces true digital stereo sound from Backbox & Cabinet Speakers or *"Mono"* on the Cabinet Speaker *(when used by itself).* This Menu is provided to allow the technician a simple method of testing the speakers if rewired or replaced.

Upon entering **Sound / Speaker Test**, you will notice the Dot Matrix Display indicating the first option of *available* music *and/or* sound(s) in this test. Press the **Red [+ / >] Button** to cycle through the *available* music *and/or* sounds, and press the **Black [SELECT] Button** to play the option shown in the Dot Matrix Display. Press the **Green [BACK] Button** to exit.

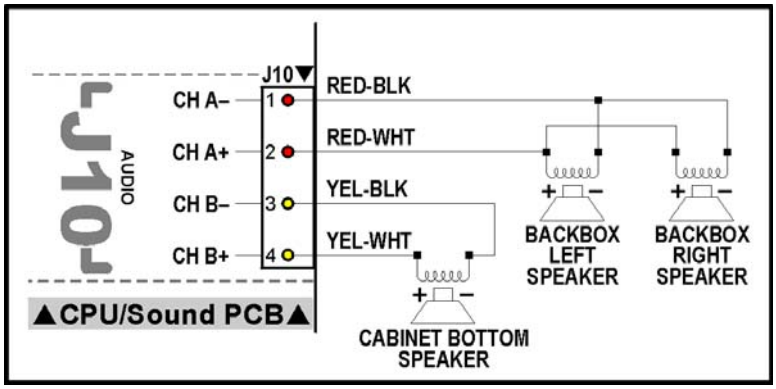

Speaker Phase Testing

Connections to each of speakers are polarized and each must be connected appropriately for the best quality sound. If one speaker has the positive and negative connections reversed with respect to the other one, bass frequencies will not be produced properly and the overall sound quality will be poor. To test for proper speaker phasing, use the **Sound / Speaker Test** to cycle through the available music and sound. If the sound is not balanced or doesn't sound correct, check the speaker wiring.

1. Check each speaker for polarity markings. If the speakers have polarity markings, verify that the Backbox Speaker's **RED-BLK** Wires and the Cabinet Speaker **YEL-BLK** Wire(s) are connected to the negative (–) terminal.

2. Disconnect the speaker output **Connector J10 (AUDIO)** from the CPU / Sound PCB *(in the Backbox)* and connect a 1.5-volt battery across each speaker pair one at a time while observing the speakers.

3. Make sure the positive (**+**) battery terminal is connected to the positive lead [J10, Pin-2, **CH A+**] (**RED-WHT**) *or* [J10, Pin-4, **CH B+**] (**YEL-WHT**) each time. As the connection is made, check speaker cone movement; proper connections are indicated by outward movement.

Begin Burn-In

To initiate, from the **DIAGNOSTICS MENU**, select the "BURN" *Icon*. After selecting this *Icon*, the ***Burn-In Test*** will start. Ensure the **Power Interlock Switch** is pulled out if testing with the Coin Door open *(required for coil function).* Upon entering **Burn-In Test**, the game will exercise all CPU I/O Functions: **Dot Matrix Display Test**, **Coil Cycling Testing**, **All Lamps Test** and **Sound / Speaker Test**. Press the **Green [BACK] Button**, to pause and to view the cumulative Burn-In minutes. Press the **Green [BACK] Button** again to return to the **DIAGNOSTICS MENU**.

Note: *To reset Burn-In minutes back to **0:00**, see Section **3**, Chapter **5**, **GO TO RESET MENU** (via the UTILITIES MENU), **Reset Factory Settings**.* ⚠ ***CAUTION:*** *Performing a **FACTORY RESET** will reset all other information as well (read Section **3**, Chapter **5**, **GO TO UTILITIES MENU**, for more information).*

Dot Matrix Test

To initiate, from the **DIAGNOSTICS MENU**, select the "DOT TEST" *Icon*. After selecting this *Icon* the **Dot Matrix Test** immediately begins. The Dot Matrix Display will immediately and continuously illuminate and cycle each of the ***5 Tests for 1 pass each***. To return to the **DIAGNOSTICS MENU**, press the **Green [BACK] Button**.

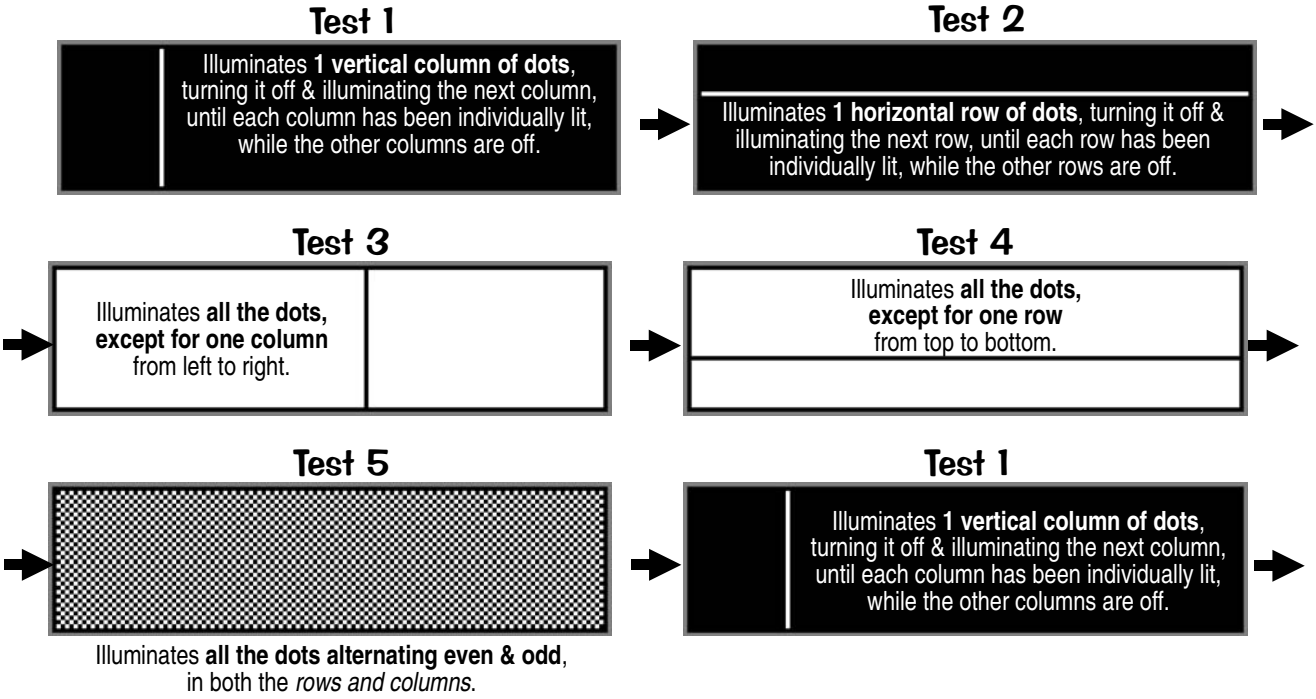

To initiate, from the **MAIN MENU**, select the "AUD" *Icon*. The **AUDITS MENU** provides **250** Audits for accounting purposes and for evaluation of *Game Programming*. The Audits are divided into 4 groups: • **Earnings Audits [#1 – #13]**, • **Standard Audits [#1 – #59]**, • **Feature Audits (Programming Use Only) [#1 – #164]** and • **Tournament Audits [#1 – #14]**, "T AUD" *Icon* provided as an alternate to access Tournament Audits. For more information on the **TOURNAMENT MENU**, *review Section **3**, Chapter **6**, **GO TO TOURNAMENT MENU**).* ***Coming Soon!*** Audits / pertinent game data can be downloaded from the **USB MENU** *(via the **UTILITIES MENU**)*, select the "DUMP" *Icon. See Section **3**, Chapter **5**, **GO TO UTILITIES MENU**, for more information.*

Audits which are named **Proprietary** are also for ***Future Expansion*** or ***Programming***. Game code may get upgraded during production; compare all Audits in the Dot Matrix Display with the manual and make any corrections, as necessary. Audits are subject to change *(with or without notice).*

All **AUDITS MENU** *Icons* and there usages are explained throughout this chapter in the same order as seen in the Dot Matrix Display. ***NOTE:*** Depending on Game Type, Version, selections made, Dip Switch settings, location and/or areas, some *Icons* may appear non-functional *or* may not appear at all. ***Icons** and/or **functions**, **order** and **operation are subject to change***.

In displays where changes can be made *or* to perform a function, use the **GREEN Button** to go **[BACK]**, exit *or* escape, the **RED Buttons** to **[< / –]** MOVE BACK / LEFT **/ [+ / >]** MOVE FORWARD / RIGHT to view the next audit in the group, and the **BLACK Button** to **[SELECT]** the sub-menus.

Earnings Audits [#1-#13]

To initiate, from the **AUDITS MENU**, select the "EARN" *Icon*. The Dot Matrix Display will indicate the *audit number (in this group)*, *audit name* and the *audit total or value*. The current audit will remain on the display until the next audit is viewed or when this sub-menu is exited.

#1 **TOTAL PAID CREDITS [0] :** Total number of *Paid Credits.*

#2 **FREE GAME PERCENTAGE [0%] :** Percentage value is 'Total Free Plays' (Standard Audit **15**) divided by 'Total Plays' (Standard Audit **16**).

#3 **AVERAGE BALL TIME [0:00] :** In seconds, the average ball time is derived from the total play time divided by Standard Audit **1**, Total Balls Played.

#4 **AVERAGE GAME TIME [0:00] :** The average game time is expressed in minutes and seconds.

#5 **COINS THROUGH LEFT SLOT [0] :** Total 'Left Coin Slot' Dedicated Switch (**D-1**) closures.

#6 **COINS THROUGH RIGHT SLOT [0] :** Total 'Right Coin Slot' Dedicated Switch (**D-3**) closures.

#7 **COINS THROUGH CENTER SLOT [0] :** Total 'Center Coin Slot' Dedicated Switch (**D-2**) closures.

#8 **COINS THROUGH FOURTH SLOT:** Total '4th Coin Slot' Dedicated Switch (**D-4**) closures.

#9 **COINS THROUGH FIFTH SLOT:** Total '5th Coin Slot' Dedicated Switch (**D-5**) closures.

#10 **TOTAL COINS [0] :** Total amount of coins registered through all the *Coin Slots.*

#11 **TOTAL EARNINGS [USD 0.00] :** Total cash value accumulated since the last Factory Reset occurred *(reveiw Section **3**, Chapter **5**, **GO TO RESET MENU** (via the **UTILITIES MENU**), **Reset Coin Audits**).*

#12 **METER CLICKS [0] :** Total number of money clicks accumulated.
Based on the country's lowest coin denomination used for the game credit.

#13 **SOFTWARE METER [0] :** Continuing total of Meter Clicks.
This audit cannot be reset; the display shows the constant addition of Meter Clicks.

Standard Audits [#1 – #59]

To initiate, from the **AUDITS MENU**, select the "S.P.I." *Icon*. The Dot Matrix Display will indicate the *audit number (in this group)*, *audit name* and the *audit total or value*. The current audit will remain on the display until the next audit is viewed or when this sub-menu is exited.

#1 **TOTAL BALLS PLAYED [0] :** Total number of *Regular* and *Extra Balls.*

#2 **TOTAL EXTRA BALLS [0] :** Total number of *Extra Balls* awarded.

#3 **EXTRA BALLS PERCENTAGE [0%] :** Percentage value is 'Total Extra Balls' (Standard Audit **2**) divided by 'Total Plays' (Standard Audit **16**).

#4 **REPLAY 1 AWARDS [0] :** Total *Awards (Credits, Extra Balls or Scores)* for Level 1.

#5 **REPLAY 2 AWARDS [0] :** Total *Awards (Credits, Extra Balls or Scores)* for Level 2.

#6 **REPLAY 3 AWARDS [0] :** Total *Awards (Credits, Extra Balls or Scores)* for Level 3.

#7 **REPLAY 4 AWARDS [0] :** Total *Awards (Credits, Extra Balls or Scores)* for Level 4.

#8 **TOTAL REPLAYS [0] :** Total *Awards (Credits, Extra Balls or Scores)* for exceeding *Replay Score Levels.*

#9 **REPLAY PERCENTAGE [0%] :** Percentage value is 'Total Replays' (Standard Audit **8**) divided by 'Total Plays' (Standard Audit **16**). *The percentage reflects replay total awards for exceeding replay score levels.*

#10 **TOTAL SPECIALS [0] :** Total *Awards (Credits, Extra Balls, or Scores)* for making *Specials.*

#11 **SPECIAL PERCENTAGE [0%] :** Percentage value is 'Total Specials' (Standard Audit **10**) divided by 'Total Plays' (Standard Audit **16**).

#12 **TOTAL MATCHES [0] :** Total *Credits* awarded for matching the last two digits of the score with the *System-Generated Match Number* at the end of the game. Percentage of *Match Credits* is adjustable from **0%** to **10%** or **OFF** by Standard Adjustment **20,** Match Percentage, *if enabled (review Section **3**, Chapter **4**, **GO TO ADJUSTMENTS MENU**, **Standard Adjustments***).

#13 **HIGH SCORE AWARDS [0] :** Total *Awards (Credits, Extra Balls, or Scores)* for exceeding the High-Score-To-Date scores.

#14 **HIGH SCORE PERCENT [0%] :** Percentage value is 'High Score Awards' (Standard Audit **13**) divided by 'Total Plays' (Standard Audit **16**).

#15 **TOTAL FREE PLAYS [0] :** Total *Free Credits* for *Replays, High-Score-To-Date, Specials and Match.*

#16 **TOTAL PLAYS [0] :** This total is derived by adding the sum of 'Total Paid Credits' (Earnings Audit **1**) and 'Total Free Plays' (Standard Audit **13**). *Note: Free credits are not recorded in the Audit until actually used.*

#17 **0.0M–1.99M SCORES [00] :** Total number of games the Player's final score was between **0** and **1,999,990** points.

#18 **2.0M–3.99M SCORES [00] :** Total number of games the Player's final score was between **2,000,000** and **3,999,990** points.

#19 **4.0M–5.99M SCORES [00] :** Total number of games the Player's final score was between **4,000,000** and **5,999,990** points.

#20 **6.0M–7.99M SCORES [00] :** Total number of games the Player's final score was between **6,000,000** and **7,999,990** points.

#21 **8.0M–9.99M SCORES [00] :** Total number of games the Player's final score was between **8,000,000** and **9,999,990** points.

#22 **10.0M–12.49M SCORES [00] :** Total number of games the Player's final score was between **10,000,000** and **12,499,990** points.

#23 **12.5M–14.99M SCORES [00] :** Total number of games the Player's final score was between **12,500,000** and **14,499,990** points.

#24 **15.0M–17.49M SCORES [00] :** Total number of games the Player's final score was between **15,000,000** and **17,499,990** points.

#25 **17.50M–19.99M SCORES [00] :** Total number of games the Player's final score was between **17,500,000** and **19,999,990** points.

#26 **20.0M–24.99M SCORES [00] :** Total number of games the Player's final score was between **20,000,000** and **24,499,990** points.

#27 **25.0M–29.99M SCORES [00] :** Total number of games the Player's final score was between **25,000,000** and **29,999,990** points.

Standard Audits 28-59 continued on the next page.

#28 **30.0M–39.99M SCORES [00] :** Total number of games the Player's final score was between **30,000,000** and **39,999,990** points.

#29 **40.0M–49.99M SCORES [00] :** Total number of games the Player's final score was between **40,000,000** and **49,999,990** points.

#30 **50.0M–74.99M SCORES [00] :** Total number of games the Player's final score was between **50,000,000** and **74,999,990** points.

#31 **75.0M–99.99M SCORES [00] :** Total number of games the Player's final score was between **75,000,000** and **99,999,990** points.

#32 **100.0M–149.99M SCORES [00] :** Total number of games the Player's final score was between **100,000,000** and **149,999,990** points.

#33 **150.0+M SCORES:** Total number of games the Player's final score was **150,000,000** points and over.

#34 **AVERAGE SCORES [00] :** This total is derived by adding the Final Score of each game to a table and dividing this sum by 'Total Plays' (Standard Audit **16**).

#35 **SERVICE CREDITS [0] :** Total 'Green [SERVICE CREDIT] Button' Dedicated Switch (**D-21**) closures in **Attract Mode** *(not while in the **SERVICE MENU**). See Section **3**, Chapter **1**, **Service Switch X4 Set Access & Use**, for how to receive Service Credits. See Section **3**, Chapter **5**, **GO TO RESET MENU** (via GO TO UTILITIES MENU), **Reset Credits**, for how to delete credits.*

#36 **BALL SEARCH STARTED [0] :** Total number of times the game performed a *Ball Search*.

#37 **LOST BALL FEEDS [0] :** Total number of times the game added a pinball to play when it could not find a pinball after *Ball Search (review Section **3**, Chapter **2**, **GO TO DIAGNOSTICS MENU**, **Technicians Alert** [Pinball Detection]).*

#38 **LOST BALL GAME STARTS [0] :** Total number of times the game started with a pinball missing from the ball trough at the start of a game *(review Section **3**, Chapter **2**, **GO TO DIAGNOSTICS MENU**, **Technicians Alert** [Pinball Detection]).*

#39 **LEFT DRAINS [0] :** Total 'Left Outlane' Switch (**24**) closures.

#40 **CENTER DRAINS [0] :** Total number of times the pinball had drained when the last switch closed was not the 'Left Outlane' (**24**) *or* the 'Right Outlane' Switch (**29**).

#41 **RIGHT DRAINS [0] :** Total 'RIght Outlane' Switch (**29**) closures.

#42 **TILTS [0] :** Total 'Tilt Pendulum' Dedicated Switch (**D-17**) closures.

#43 **TOTAL BALLS SAVED [0] :** Total number of times this feature was usedee Standard Adjustment **51**, Ball Save Time. This feature is adjustable from **0:01–0:15**, **AUTO** or **NO BALL SAVES** *(review Section **3**, Chapter **4**, **GO TO ADJUSTMENTS MENU, Standard Adjustments**). This feature is enabled at the start of each pinball and is disabled as soon as a predetermined number of switches are "closed" **or** the allocated time has expired.*

#44 **LEFT FLIPPER USED [0] :** Total 'Left Flipper Button' Dedicated Switch (**D-9**) closures in **Game Mode**.

#45 **RIGHT FLIPPER USED [0] :** Total 'Right Flipper Button' Dedicated Switch (**D-11**) closures in **Game Mode**.

#46 **0 - 1 MINUTE GAMES [0] :** Total games in which the total game time was between **0:00** and **1:00** minute.

#47 **1 – 1.5 MINUTE GAMES [0] :** Total games where play time was between **1:00** and **1:30** minutes.

#48 **1.5 – 2 MINUTE GAMES [0] :** Total games where play time was between **1:30** and **2:00** minutes.

#49 **2 – 2.5 MINUTE GAMES [0] :** Total games where play time was between **2:00** and **2:30** minutes.

#50 **2.5 – 3 MINUTE GAMES [0] :** Total games where play time was between **2:30** and **3:00** minutes.

#51 **3 – 3.5 MINUTE GAMES [0] :** Total games where play time was between **3:00** and **3:30** minutes.

#52 **3.5 – 4 MINUTE GAMES [0] :** Total games where play time was between **3:30** and **4:00** minutes.

#53 **4 – 5 MINUTE GAMES [0] :** Total games where play time was between **4:00** and **5:00** minutes.

#54 **5 – 6 MINUTE GAMES [0] :** Total games where play time was between **5:00** and **6:00** minutes.

#55 **6 – 8 MINUTE GAMES [0] :** Total games where play time was between **6:00** and **8:00** minutes.

#56 **8 – 10 MINUTE GAMES [0] :** Total games where play time was between **8:00** and **10:00** minutes.

#57 **10 – 15 MINUTE GAMES [0] :** Total games where play time was between **10:00** and **15:00** minutes.

#58 **15+ MINUTE GAMES:** Total games in which the total game time was **15:00** minutes and over.

#59 **RECENT REPLAY PERCENT:** *Percent figured with programming thresholds for a determined number of games. The % reflects replay total awards for exceeding replay score levels.*

Feature Audits [#1 – #164]

To initiate, from the **AUDITS MENU**, select the "WPT" *Icon*. The Dot Matrix Display will indicate the *audit number (in this group)*, *audit name* and the *audit total or value*. The current audit will remain on the display until the next audit is viewed or when this sub-menu is exited.

Feature Audits Definition: Programming Use Only. *The proprietary information Total number of times a feature was started, awarded, lit, played and/or completed (awarded); also, the total number of Switch Closures during certain modes or features are tracked (a predetermined single/multiple variations of switch closures are used to determine the lighting and/or completion of the feature stated).*

Nr.	FEATURE AUDIT NAME
01	LEFT OUTLANES
02	LEFT INLANES
03	LEFT SLINGSHOTS
04	RT SLINGSHOTS
05	RIGHT INLANES
06	RIGHT OUTLANES
07	LEFT REBOUND
08	LIGHT LOCK TRGT
09	RIGHT REBOUND
10	LEFT ORBITS
11	LOOPING LT ORBIT
12	LEFT RAMPS
13	LEFT VUKS
14	POP EJECT SHOTS
15	POP EJECT R'BCKS
16	RIGHT RAMPS
17	RIGHT ORBITS
18	LEFT BANK DROPS
19	MID BANK DROPS
20	RT BANK DROPS
21	LT SPINNER SPINS
22	RT SPINNER SPINS
23	POP HITS
24	TRIPLE POP HITS
25	POP STANDUPS
26	POP S-U COMPLTD
27	UPF LEFT LANE
28	UPF STANDUPS
29	UPF JAIL BASH
30	UPF JAIL HOLE
31	UPF SCOOPS
32	UPF RIGHT RAMPS
33	UPF DRAINS
34	SKL SHOT STARTS
35	SS - HOLDEM
36	SS - MYSTERY
37	SS - SKILL FLIP
38	FLIP SHOT MADE
39	UPF HURRYUPS ...
40	HUPS... INCREASED
41	HUPS...AWARDED
42	HUPS...DRAINED
43	JAIL BAR HITS
44	JAIL BAR RAISED
45	J'L BALLS LOCKED
46	JAIL BALL HITS
47	A/H MB STARTED
48	A/H MB +2 STARTED
49	A/H BAR HITS
50	A/H BARS RAISED
51	A/H BALLS LOCKED
52	A/H INSTNT LOCKS
53	A/H BALL HITS
54	A/H BALL RELEASES
55	A/H AUTO R'LEASES
56	A/H JACKPOTS
57	A/H 3X JACKPOTS
58	A/H SUPER JP LIT
59	A/H SUPER JPS
60	A/H TOTAL POINTS
61	HLDEM DEALT FLOP
62	HLDEM DEALT TURN
63	HLDM DEALT RIVER
64	HLDEM - HIGH CARD
65	HOLDEM - 1 PAIR
66	HOLDEM - 2 PAIR
67	HOLDEM - 3/KIND
68	HLDEM - STRAIGHT
69	HOLDEM - FLUSH
70	HLDM - FULL HOUSE
71	HOLDEM - 4/KIND
72	HLDEM - STR FLUSH
73	HLDM - ROYAL FLSH
74	EARNED 1 CITY
75	EARNED 2 CITIES
76	EARNED 3 CITIES
77	EARNED 4 CITIES
78	EARNED 5 CITIES
79	EARNED 6 CITIES
80	WPT CHAMPIONSHIP
81	ALL-IN MB STARTS
82	ALL-IN MB 2+ STRTS
83	PKR HAND CARDS
84	SHARPSHTR CARDS
85	PkR HAND - 1 PAIR
86	HAND - 2 PAIR
87	HAND - 3/KIND
88	HAND - STRAIGHT
89	HAND - FLUSH
90	HAND - FULL HOUSE
91	HAND - 4/KIND
92	HAND - STR FLUSH
93	HAND - ROYAL FLSH
94	HAND MB STARTS
95	HAND MB 2+ STARTS
96	PHMB 1X JACKPOTS
97	PHMB 2X JACKPOTS
98	PHMB 3X JACKPOTS
99	PHMB 6X JACKPOTS
100	PHMB 9X JACKPOTS
101	PHMB SUPER JP LIT
102	PHMB SUPER JPS
103	PHMB 3X SPR JPS
104	PHMB TOTAL PNTS
105	NL MB LOCKS LIT
106	NL MB LOCK 1
107	NL MB LOCK 2
108	NL MB STARTS
109	NL MB 2+ STARTS
110	NLMB 1X J'POT LIT
111	NLMB 2X J'POT LIT
112	NLMB 3X J'POT LIT
113	NLMB J'POT INCRSD
114	NLMB DRPS CMPLTD
115	NLMB 1X JACKPOTS
116	NLMB 2X JACKPOTS
117	NLMB 3X JACKPOTS
118	NLMB 6X JACKPOTS
119	NLMB 9X JACKPOTS
120	NLMB TTL POINTS
121	SIDE POTS
122	SPIN-A-CARD LIT
123	SPN-A-CRD CLCTD
124	CHIP TRICKS
125	UNQ CHIP TRICKS
126	CHIP TRCK TOTAL X
127	CHP TRCKS CMPLTD
128	POKER CORNER LIT
129	BLINDS STARTED
130	BLINDS - SM BLINDS
131	BLNDS - BIG BLINDS
132	BLINDS TROPHIES
133	BLINDS TOTAL PNTS
134	P.T. BTTN STARTED
135	BTN - BTN SHOTS
136	BTN - OTHER SHOTS
134	BTN - TROPHIES
135	BTN - TOTAL POINTS
136	KNOW YOUR OUTS
140	OUTS - DROPS HIT
141	OUTS - DROPS CMP
142	OUTS TROPHIES
143	OUTS TOTAL PNTS
144	CHIP & A CHAIR STR
145	CHIPS - DROPS HIT
146	CHIPS TROPHIES
147	CHIPS TOTAL PNTS
148	CHNGE GEARS STR
149	- LOW GEAR SHOTS
150	- HIGH GEAR SHOTS
151	GEARS TROPHIES
152	GEARS TOTAL PNTS
153	SPOT THE TELL STR
154	TELL - SPOTTED
155	TELL - MISSED
156	TELL TROPHIES
157	TELL TOTAL POINTS
158	P.C. WIZARD MODE
159	MYSTERY LIT
160	MYSTERY CLLCTD
161	X3 SCORING LIT
162	X3 SCORING STRTD
163	BONUS X ADV
164	BONUS X MAX AWD

Tournament Audits [#1 – #14] subject to change

This menu provides an alternate to access Tournament Audits which can be accessed from the **TOURNAMENT MENU** *(review Section **3**, Chapter **6**, **GO TO TOURNAMENT MENU** for more information).*

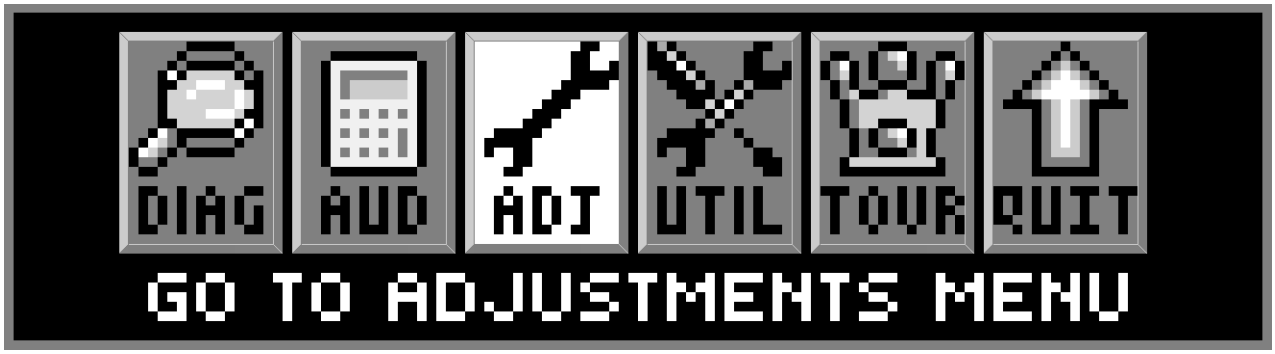

To initiate, from the **MAIN MENU**, select the "ADJ" *Icon*. The **ADJUSTMENTS MENU** provides **105** Adjustments to vary Game Functions to customize for your particular needs. The Adjustments are divided into 2 groups: • **Standard Adjustments [#1 – #61]** and • **Feature Adjustments (Programming Use Only) [#1 – #44]**. *For **quick** and **easy customization** of **Game Play Difficulty** or **Game Play Type** or how to **RESET ONLY** the Adjustments, review Section **3**, Chapter **5**, **GO TO INSTALLS MENU** (via the **UTILITIES MENU**). **Shortcut: Enter Custom Message** (Standard Adj. **44**) and **Set Custom Pricing** (via Std. Adjustment **18**, Game Pricing) can be quickly accessed via the **UTILITIES MENU**, see Section **3**, Chapter **5**, **GO TO UTILITIES MENU**.*

Adjustments which are named **Proprietary** are also for ***Future Expansion*** or ***Programming***. Game code may get upgraded during production; compare all Adjustments in the Dot Matrix Display with the manual and make any corrections, as necessary. Adjustments are subject to change *(with or without notice)*.

All **ADJUSTMENTS MENU** *Icons* and there usages are explained throughout this chapter in the same order as seen in the Dot Matrix Display. ***NOTE:*** Depending on Game Type, Version, selections made, Dip Switch settings, location and/or areas, some *Adjustments* may appear non-functional *or* may not appear at all. ***Adjustments** and/or **functions**, **order** and **operation are subject to change**. **If in doubt use the Factory Default Settings.***

In displays where changes can be made *or* to perform a function, use the **GREEN Button** to go **[BACK]**, exit *or* escape, the **RED Buttons** to **[< / –]** SELECT PREVIOUS **[+ / >]** SELECT NEXT when the adjustment name *or* setting is flashing and the **BLACK Button** to **[SELECT]** toggle between the ADJUSTMENT and SETTING.

Standard Adjustments [#1-#61]

To initiate, from the **ADJUSTMENTS MENU**, select the "S.P.I." *Icon*. The Dot Matrix Display will indicate the *adjustment number (in this group)*, *adjust. name*, *adjust. setting* and *comment line.* The current adjustment will remain on the display until the next adjustment is viewed or when this sub-menu is exited.

#1 **REPLAY TYPE:** Set to **AUTO**, **NONE**, **FIXED** *or* **DYNAMIC**. Factory Default = **AUTO**. **AUTO** & **DYNAMIC** are based on the **Replay Percentage** (Standard Adjustment **2**). • Select **FIXED** to give the player a **Replay Award** (Standard Adjustment **3**) as the **Replay Levels** (Standard Adjustments **7-10**) are reached. The **Replay Level(s)** (Standard Adjustments **7-10**) will not adjust up or down. • Select **AUTO** to give the player a **Replay Award** (Standard Adjustment **3**) as the **Auto Replay Start** (Standard Adjustment **5**) score level is reached. This *score threshold* will automatically adjust up or down based on the **Replay Percentage** chosen (Standard Adjustment **2**). The game periodically adjusts based upon the Player Base Skill Level. • Select **DYNAMIC** to give the player a **Replay Award** (Standard Adjustment **3**) as the **Dynamic Replay Start** (Standard Adjustment **6**) score level is reached. This *score threshold* will go down every game based on the **Replay Percentage** (Standard Adjustment **2**) selected. • Select **NONE** to turn off Standard Adjustments **2-11**.

#2 **REPLAY PERCENTAGE:** Set between **01% – 50**. Factory Default = **10%**. Adjustable only if **AUTO** *or* **DYNAMIC** is installed in Replay Type, Standard Adjustment **1**. For [**DYNAMIC**] example, if the *score threshold* is 50,000,00 and the **Replay Percentage** selected is **10%**, every game a player does not reach the *score threshold*, the score to reach will drop by 5,000,000 (10% of 50M). This will continue every game until the *threshold score* is reached. Thus, if the score then drops to 15,000,000 after 7 games and is then achieved, the **Replay Award** (Standard Adjustment **3**) is given. The original *score threshold* is added to 15,000,000 and is now 65,000,000. It will then take the same player 10 games to reach 15,000,000. *This adjustment is shown only if **AUTO** or **DYNAMIC** is installed in **Replay Type** (Standard Adjustment **1**).*

Standard Adjustments 3-11 continued on the next page.

#3 **REPLAY AWARD:** Set to **CREDIT**, **TICKET***, **TOKEN*** *or* **EXTRA BALL**. Factory Default = **CREDIT**. Set the type of award to be given to the player when the appropriate Replay Score threshold or level is acheived. If awarding a ***CREDIT***, ***TICKET*** *or* ***TOKEN*** is prohibited in your area, select **EXTRA BALL**. *If **TICKET** or **TOKEN** is selected, the game will require an optional Ticket *or* Token Dispenser and then **Q24 Option** (Standard Ajustment **54**) must be changed accordingly. *This adjustment is not shown if **NONE** is installed in **Replay Type** (Standard Adjustment **1**).*

#4 **REPLAY LEVELS:** Set between **1 – 4** for the number of Replay Levels to be active. Factory Default = **1**. *This adjustment is not shown if **NONE** is installed in **Replay Type** (Standard Adjustment **1**).*

#5 **AUTO REPLAY START:** Set between **5,000,000 – 150,000,000** *(increments of 1,000,000)* for the Auto Replay Start threshold. Factory Default = **20,000,000**. *This adjustment is shown only if **AUTO** is installed in **Replay Type** (Standard Adjustment **1**).*

#6 **DYNAMIC REPLAY START:** Set between **5,000,000 – 150,000,000** *(increments of 1,000,000)* for the for the Dynamic Replay Start threshold. Factory Default = **60,000,000**. *This adjustment is shown only if **DYNAMIC** is installed in **Replay Type** (Standard Adjustment **1**).*

#7 **REPLAY LEVEL #1:** Set between **5,000,000 – 150,000,000** *(increments of 1,000,000)* for first Replay Level. Factory Default = **15,000,000**. Set the first or only Replay Level. *This adjustment is shown only if **FIXED** is installed in **Replay Type** (Standard Adjustment **1**).*

#8 **REPLAY LEVEL #2:** Set between **5,000,000 – 150,000,000** *(increments of 1,000,000)* for first Replay Level. Factory Default = **30,000,000**. Set the second Replay Level. *This adjustment is shown only if **FIXED** is installed in **Replay Type** (Std. Adjustment **1**) and **2** is intalled in **Replay Levels** (Standard Adjustment **4**).*

#9 **REPLAY LEVEL #3:** Set between **5,000,000 – 150,000,000** *(increments of 1,000,000)* for first Replay Level. Factory Default = **45,000,000**. Set the third Replay Level. *This adjustment is shown only if **FIXED** is installed in **Replay Type** (Std. Adjustment **1**) and **3** is intalled in **Replay Levels** (Standard Adjustment **4**).*

#10 **REPLAY LEVEL #4:** Set between **5,000,000 – 150,000,000** *(increments of 1,000,000)* for first Replay Level. Factory Default = **60,000,000**. Set the fourth Replay Level. *This adjustment is shown only if **FIXED** is installed in **Replay Type** (Std. Adjustment **1**) and **4** is intalled in **Replay Levels** (Standard Adjustment **4**).*

#11 **REPLAY BOOST:** Set to **YES** *or* **NO**. Factory Default = **YES**. When set to **YES**, while **FIXED** or **AUTO** maintains the Replay Levels, Replay Boost works as follows: If the Replay Level is 7,000,000 *(regardless of the Replay Percentage)*, and the Player scores 20M, and receives the Replay Award, the next game the Current Replay Level is added to this base. Thus the next game, the Replay Level is 14,000,000. The Player agains scores 20M. The next game the Player will need to achieve 21,000,000 to earn the Replay Award. If the Player does not achieve 21,000,000, the next game reverts back to the original 7,000,000 or the new adjusted level maintained by the Fixed or Autopercentaging Feature. *This adjustment is shown only if **AUTO** or **FIXED** is installed in **Replay Type** (Standard Adjustment **1**).*

#12 **SPECIAL LIMIT:** Set between **1 – 5**, **UNLIMITED** *or* **NO SPECIALS**. Factory Default = **1**. Set the maximum number of *Specials* that may be accumulated per game.

#13 **SPECIAL PERCENTAGE:** Set between **1% – 50%**. Factory Default = **10%**. This adjustment allows the operator to adjust how frequently the ***Special Feature*** is made available to the player. *This adjustment is not shown if **NO SPECIALS** is installed in **Special Limit** (Standard Adjustment **12**).*

#14 **SPECIAL AWARD:** Set to **CREDIT**, **TICKET***, **TOKEN***, **POINTS** *or* **EXTRA BALL**. Factory Default = **CREDIT**. Select **EX. BALL** or **POINTS** if awarding a ***CREDIT*** or ***TICKET / TOKEN*** is prohibited in your area. *This adjustment is not shown if **NO SPECIALS** is installed in **Special Limit** (Standard Adjustment **12**).*

#15 **FREE GAME LIMIT:** Set between **1 – 9**, **UNLIMITED** *or* **NO FREE GAMES**. Factory Default = **5**. Set the maximum number of *Free Games* that may be accumulated per game.

#16 **EXTRA BALL LIMIT:** Set between **1 – 9**, **UNLIMITED** *or* **NO EXTRA BALLS**. Factory Default = **5**. Set the number of *Extra Balls* that may be accumulated per game.

#17 **EXTRA BALL PERCENTAGE:** Set between **1% – 50%**. Factory Default = **25%**. This adjustment allows the operator to adjust how frequently the ***Extra Ball Feature*** is made available to the player. *This adjustment is not shown if **NO EXTRA BALLS** is installed in **Extra Ball Limit** (Standard Adjustment **16**).*

#18 **GAME PRICING:** There are two (2) methods available for *Coin Switch Programming*: **Standard** & **Custom**. Set between **AUSTRALIA 1 – UK 6** *or* **CUSTOM**. Factory Default = **USA 5**. *Shortcut: **Set Custom Pricing** and instructions, review Section **3**, Chapter **5**, **GO TO UTILITIES MENU**, **Set Custom Pricing**.* The appropriate Dip Switch Setting (Dip Sw. 1-8 location CPU/Sound PCB SW1) in relationship to the Pricing Scheme selected is important *(view the tables on the following pages for more information).*

Standard Adjustment 18, Game Pricing, continued on the next page.

USA Standard Pricing Select Table

CPU/SOUND PCB DIP SWITCH SW1 SETTING	COUNTRY SETTING OPTION(S)	COIN MECHANISMS (SWITCHES) COINS THRU ... SLOT: LEFT	CENTER	RIGHT	4TH	PRICING SCHEME *Number of Plays (Credits) for Price Amount Shown See "Appendix J" for Coin Cards Examples & Info!*			Requires SPI Coin Card(s) Part Number
Pos. 1 2 3 4 5 6 7 8 — Default Highlighted						**USD** // UNITED STATES DOLLAR // [$]			
ON	USA 1					1 /$ .25			755-5400-01-Y
OFF ▼ ▼ ▼ ▼ ▼ ▼ ▼ ▼	USA 2					1 /$ .50	2 /$ .75	3 /$ 1.00	755-5400-02-Y
	USA 3					1 /$ .50		*For **USA 6** and **USA 7** use:*	755-5400-02-Y
	USA 4					1 /$ .50			755-5400-02-Y
	USA 5	**0.25**	**1.00**	**0.25**		1 /$ .50	5 /$ 2.00	755-5400-02-Y	755-5400-00-Y
	USA 6					1 /$ .50	2 /'4 X 25¢'	3 /$ 1.00 Bill	◀ Used to promote the Bill Validator.
	USA 7					1 /$ .50	4 /$ 1.50	6 /$ 2.00	
	USA 8					1 /$ .50	3 /$ 1.00	***USA 6 Note:** If player uses x4 25¢ quarters = 2 plays. $ bill = 3!*	755-5400-00-Y
	USA 9					1 /$ 1.00			755-5400-07-Y
	USA 10					1 /$ .75	3 /$ 2.00		755-5400-11-Y

International (non-Euro) Standard Pricing Select Table

CPU/SOUND PCB DIP SWITCH SW1 SETTING	COUNTRY SETTING OPTION(S)	COIN MECHANISMS (SWITCHES) COINS THRU ... SLOT: LEFT	CENTER	RIGHT	4TH	PRICING SCHEME *Number of Plays (Credits) for Price Amount Shown See "Appendix J" for Coin Cards Examples & Info!*			Requires SPI Coin Card(s) Part Number
Pos. 1 2 3 4 5 6 7 8 — Default Highlighted						**AUD** // AUSTRALIAN DOLLARS // [$]			
ON ▲ ▲ ▲ ▲	**AUSTRALIA 1**	**0.20**	**1.00**	**2.00**		1 /$ 1.00	3 /$ 2.00		755-5406-00-Y (1 Side)
OFF ▼ ▼ ▼ ▼	AUSTRALIA 2					1 /$ 1.00			
Pos. 1 2 3 4 5 6 7 8 — Default Highlighted						**CAD** // CANADIAN DOLLARS // [$]			
ON ▲ ▲	CANADA 1 [25¢ door]	**0.25**	**0.25**	**1.00**	**2.00**	1 /$ .50	2 /$ .75	3 /$ 1.00	755-5400-00-Y -01-Y *or* -02-Y
OFF									
ON ▲ ▲	**CANADA 2** [dollar door]	**1.00**		**2.00**		1 /$ 1.00	3 /$ 2.00		755-5400-10-Y
OFF ▼ ▼ ▼									
Pos. 1 2 3 4 5 6 7 8 — Default Highlighted						**HRK** // CROATIAN KUNA // [kuna]			
ON ▲ ▲ ▲	**CROATIA**	**1**	**2**	**5**		1 /4 kuna	2 /6 kuna		755-5410-00-Y (2-Sided)
OFF ▼ ▼ ▼ ▼									
Pos. 1 2 3 4 5 6 7 8 — Default Highlighted						**DKK** // DANISH KRONER // [Kr]			
ON ▲ ▲	**DENMARK 1**	**1**	**5**	**10**	**20**	1 /3 Kr	2 /5 Kr		755-5402-00-Y (2-Sided)
OFF ▼ ▼ ▼ ▼	DENMARK 2					1 /2 Kr	3 /5 Kr	7 /10 Kr	
Pos. 1 2 3 4 5 6 7 8 — Default Highlighted						**JPY** // JAPANESE YEN // ¥			
ON ▲ ▲ ▲	JAPAN 1	**100**		**100**		1 /100 ¥			755-5408-01-Y (2-Sided)
OFF ▼ ▼ ▼ ▼	**JAPAN 2**					1 /100 ¥	3 /200 ¥		
Pos. 1 2 3 4 5 6 7 8 — Default Highlighted						TOKEN // *ME currency used to buy token* //			
ON ▲ ▲ ▲ ▲	**MIDDLE EAST**	**token**		**token**		1 /1 token			755-5400-06-Y (use Side 1)
OFF ▼ ▼ ▼ ▼									
Pos. 1 2 3 4 5 6 7 8 — Default Highlighted						**NZD** // NEW ZEALAND DOLLAR // [$]			
ON ▲	**NEW ZEALAND 1**	**1.00**		**2.00**		1 /$ 1.00			755-5406-00-Y (Side 2)
OFF ▼ ▼ ▼ ▼	NEW ZEALAND 2					1 /$ 1.00	3 /$ 2.00		
Pos. 1 2 3 4 5 6 7 8 — Default Highlighted						**NOK** // NORWEGIAN KRONE // [Kr]			
ON ▲ ▲	**NORWAY 1**	**10**	**5**	**20**		1 /10 Kr			755-5403-01-Y (2-Sided)
OFF ▼ ▼ ▼ ▼	NORWAY 2					1 /10 Kr	3 /20 Kr		
Pos. 1 2 3 4 5 6 7 8 — Default Highlighted		▼ LEFT SWITCH CAN BE WIRED TO BILL ACCEPTOR ▼				**RUB** // RUSSIAN RUBLE //			
ON ▲ ▲	**RUSSIA**	**10**	**5**	**1**		1 /5 Ruble			755-5411-00-Y (2-Sided)
OFF ▼ ▼ ▼ ▼									
Pos. 1 2 3 4 5 6 7 8 — Default Highlighted						**ZAR** // SOUTH AFRICAN RAND // [R]			
ON ▲ ▲	**SO. AFRICA 1**	**0.50**	**1.00**	**1.00**	**1.00**	1 /R 2.00			755-5409-01-Y (2-Sided)
OFF ▼ ▼ ▼ ▼	SO. AFRICA 2					1 /R 3.00	2 /R 5.00		
Pos. 1 2 3 4 5 6 7 8 — Default Highlighted						**SEK** // SWEDISH KRONOR // [kr]			
ON ▲ ▲ ▲	**SWEDEN 1**	**1**	**5**	**10**		1 /10 kr	2 /15 kr	3 /20 kr	755-5404-00-Y (2-Sided)
OFF ▼ ▼ ▼ ▼	SWEDEN 2					1 /5 kr			
Pos. 1 2 3 4 5 6 7 8 — Default Highlighted						**TWD** // TAIWANESE DOLLAR //			
ON ▲ ▲	**TAIWAN**	**10**		**10**		1 /10 TWD			755-5412-00-Y (use Side 1)
OFF ▼ ▼ ▼ ▼									
Pos. 1 2 3 4 5 6 7 8 — Default Highlighted						**CHF** // SWISS FRANCS // [S*f*]			
ON ▲ ▲	**SWITZERLAND 1**	**1**	**2**	**5**		1 /1 S*f*	6 /5 S*f*		755-5405-00-Y (2-Sided)
OFF ▼ ▼ ▼ ▼	SWITZERLAND 2					1 /1 S*f*	3 /2 S*f*	9 /5 S*f*	
Pos. 1 2 3 4 5 6 7 8 — Default Highlighted		▼ 5TH COIN SLOT NOT AVAILABLE WITH CUSTOM PRICING ▼				**GPB** // UNITED KINGDOM POUNDS // [£]			
ON ▲ ▲ ▲	UK 1	LEFT	CENTER	RIGHT	4TH / 5TH	3 /£ 1.00	7 /£ 2.00		755-5407-00-Y
OFF ▼ ▼ ▼ ▼	UK 2	**0.10**	**0.50**	**1.00**	**0.20** / **2£** ▲ *Coin Only*	4 /£ 1.00			755-5407-01-Y*
	UK 3					1 /£ .50	5 /£ 2.00		755-5407-01
	UK 4					1 /£ .30	4 /£ 1.00		755-5407-01-Y*
	UK 5					1 /£ 1.00	3 /£ 2.00		755-5407-01
	UK 6					3 /£ 2.00		*use blank side	755-5407-01-Y*

HIGHLIGHTED = *Factory Default*

Standard Adjustment 18, Game Pricing, continued on the next page.

Euro 1-12 Summary & International (Euro) Standard Pricing Select Table

CPU/SOUND PCB DIP SWITCH SW1 SETTING	COUNTRY SETTING OPTION(S)	COIN MECHANISMS (SWITCHES) COINS THRU ... SLOT: LEFT	CENTER	RIGHT	4TH	PRICING SCHEME *Number of Plays (Credits) for Price Amount Shown — See "Appendix J" for Coin Cards Examples & Info!*			Requires SPI Coin Card(s) Part Number
Pos. 1 2 3 4 5 6 7 8	Default Highlighted					EUR // EUROPEAN UNION EUROS // [€]			
ON S E E B E L O W	Euro 1	0.50	1.00	2.00	optional 0.20 optional	1 /€ .50			755-5401-01-Y
OFF S E T T I N G S	Euro 2					1 /€ .50	5 /€ 2.00		755-5401-02-Y
Euro 1-12 are alternate settings for countries using the Euro.	Euro 3					1 /€ .50	3 /€ 1.00		755-5401-03-Y
	Euro 4					1 /€ .50	6 /€ 2.00		755-5401-04-Y
	Euro 5					1 /€ .50	3 /€ 1.00	7 /€ 2.00	755-5401-05-Y
	Euro 6					2 /€ .50			755-5401-06-Y
	Euro 7					1 /€ 1.00	5 /€ 4.00		755-5401-07-Y
	Euro 8					1 /€ 1.00	3 /€ 2.00		755-5401-08-Y
	Euro 9					1 /€ 1.00	2 /€ 1.50	3 /€ 2.00	755-5401-09-Y
	Euro 10					1 /€ 1.00	3 /€ 2.00	7 /€ 3.00	755-5401-10-Y
	Euro 11					1 /€ 1.00	4 /€ 2.00		755-5401-11-Y
	Euro 12					2 /€ 1.00	9 /€ 4.00		755-5401-12-Y

*For a different **Euro Pricing Scheme** (other than Factory Default listed below), scroll through **Standard Adjustment 18**: Euro 1-12 or CUSTOM* for new setting (reference above Euro 1-12 Summary). Keep the Country Dip Switch Setting the same as listed below.*

Pos. 1 2 3 4 5 6 7 8	Default Highlighted								
ON ▲	AUSTRIA Euro 9	0.50	1.00	2.00		1 /€ 1.00	2 /€ 1.50	3 /€ 2.00	755-5401-09-Y
OFF ▼ ▼ ▼ ▼ ▼ ▼ ▼									
Pos. 1 2 3 4 5 6 7 8	Default Highlighted								
ON ▲	BELGIUM Euro 1	0.50	1.00	2.00		1 /€ .50			755-5401-01-Y
OFF ▼ ▼ ▼ ▼ ▼ ▼ ▼									
Pos. 1 2 3 4 5 6 7 8	Default Highlighted								
ON ▲ ▲	FINLAND Euro 8	0.50	1.00	2.00		1 /€ 1.00	3 /€ 2.00		755-5401-08-Y
OFF ▼ ▼ ▼ ▼ ▼ ▼ ▼									
Pos. 1 2 3 4 5 6 7 8	Default Highlighted								
ON ▲ ▲	FRANCE Euro 10	0.50	1.00	2.00		1 /€ 1.00	3 /€ 2.00	7 /€ 3.00	755-5401-10-Y
OFF ▼ ▼ ▼ ▼ ▼ ▼ ▼									
Pos. 1 2 3 4 5 6 7 8	Default Highlighted								
ON ▲ ▲ ▲	GERMANY 1	0.50	1.00	2.00		1 /€ .50			755-5401-01-Y
OFF ▼ ▼ ▼ ▼ ▼ ▼ ▼	**GERMANY 2**					1 /€ .50	5 /€ 2.00		755-5401-02-Y
	GERMANY 3					1 /€ .50	6 /€ 2.00		755-5401-04-Y
Pos. 1 2 3 4 5 6 7 8	Default Highlighted								
ON ▲ ▲ ▲ ▲	GREECE Euro 6	0.50	1.00	2.00		2 /€ .50			755-5401-06-Y
OFF ▼ ▼ ▼ ▼									
Pos. 1 2 3 4 5 6 7 8	Default Highlighted								
ON ▲	ITALY 1	0.50		0.50		1 /€ .50			755-5401-01-Y
OFF ▼ ▼ ▼ ▼ ▼ ▼ ▼	ITALY 2					1 /€ 1.00	3 /€ 2.00		755-5401-08-Y
Pos. 1 2 3 4 5 6 7 8	Default Highlighted								
ON ▲	NETHERLANDS Euro 3	0.50	1.00	2.00		1 /€ .50	3 /€ 1.00		755-5401-03-Y
OFF ▼ ▼ ▼ ▼ ▼ ▼ ▼									
Pos. 1 2 3 4 5 6 7 8	Default Highlighted								
ON ▲ ▲	PORTUGAL	0.50		0.50		1 /€ .50			755-5401-01-Y
OFF ▼ ▼ ▼ ▼ ▼ ▼ ▼									
Pos. 1 2 3 4 5 6 7 8	Default Highlighted								
ON ▲ ▲	SPAIN Euro 3	0.50	1.00	2.00		1 /€ .50	3 /€ 1.00		755-5401-03-Y
OFF ▼ ▼ ▼ ▼ ▼ ▼ ▼									

HIGHLIGHTED = *Factory Default*

For the associated **Coinage Card** required *if the Factory Default Setting was changed*, view on-line at:

http://www.sternpinball.com/coinagecards.shtml

You can download and print the replacement card. *Adobe® Reader 5.0 or higher required (links on site).* Use **Yellow Card Stock**: **ASTROBRIGHTS® SOLAR YELLOW #65 FROM WAUSAU PAPER PRODUCTS** (Stock #22731)

#19 **MATCH PERCENTAGE:** Set between **0% – 10%** *or* **OFF**. Factory Default = **9%**. At **0**% the *Match Animation Feature* occurs at the end of the game but never awards the **Match Award** (Standard Adjustment **20**). Set to **OFF**, no ***Match Animation Feature*** is shown.

#20 **MATCH AWARD:** Set to **CREDIT**, **TICKET*** *or* **TOKEN***. Factory Default = **CREDIT**. *If **TICKET** or **TOKEN** is selected, the game will require an optional Ticket *or* Token Dispenser and then **Q24 Option** (Standard Ajustment **54**) must be changed accordingly. *This adjustment is not shown if **OFF** is installed in **Match Percentage** (Standard Adjustment **19**).*

#21 **BALLS PER GAME:** Set between **1 – 10**. Factory Default = **3**. Set the number of balls per game.

Standard Adjustments 22-33 continued on the next page.

#22 **TILT WARNINGS:** Set between **0 – 3**. Factory Default = **2**. Set the number of Plumb Bob Tilt Switch closures before the ball in play is tilted. *Each closure generates an audible alert and/or display alert.*

#23 **CREDIT LIMIT:** Set between **4 – 50**. Factory Default = **30**. Set the maximum credits allowed.

#24 **ALLOW HIGH SCORES:** Set to **YES** *or* **NO**. Factory Default = **YES**. When set to **YES**, if a player exceeds the Default Grand Champion *or* 1-4 High Scores, the player may receive a **High Score Award** (Standard Adjustment **25**) and enter their **3 Initials** *or* **10-Letter Name** (Standard Adjustment **40**). Set to **NO** to disable this feature. *The following Standard Adjustments 25-41 are not shown if **NO** is installed.*

#25 **HIGH SCORE AWARD:** Set to **CREDIT**, **TICKET*** or **TOKEN***. Factory Default = **CREDIT**. Set the type of award to be given to the player when the appropriate **Grand Champion Score** or **High Score #1-#4** threshold or level is acheived. If awarding a ***CREDIT***, ***TICKET*** *or* ***TOKEN*** is prohibited in your area, install **NO** in **Allow High Scores** (Standard Adjustment **24**). *If **TICKET** or **TOKEN** is selected, the game will require an optional Ticket *or* Token Dispenser and then **Q24 Option** (Std. Adj. **54**) must be changed accordingly. *This adjustment is not shown if **NO** is installed in **Allow High Scores** (Std. Adj. **24**).*

#26 **GRAND CHAMPION AWARDS:** Set between **0 – 5**. Factory Default = **1**. Set the number of **High Score Award**(s) (Std. Adj. **25**), awarded for exceeding the Grand Champion Score (Standard Adjustment **31**). This adjustment is *not shown if **NO** is installed in **Allow High Scores** (Standard Adjustment **24**).*

#27 **HIGH SCORE #1 AWARDS:** Set between **0 – 3**. Factory Default = **1**. Set the number of **High Score Award**(s) (Std. Adj. **25**), awarded for exceeding the High Score #1 (Standard Adjustment **31**). This adjustment is *not shown if **NO** is installed in **Allow High Scores** (Standard Adjustment **24**).*

#28 **HIGH SCORE #2 AWARDS:** Set between **0 – 2**. Factory Default = **0**. Set the number of **High Score Award**(s) (Std. Adj. **25**), awarded for exceeding the High Score #2 (Standard Adjustment **32**). This adjustment is *not shown if **NO** is installed in **Allow High Scores** (Standard Adjustment **24**).*

#29 **HIGH SCORE #3 AWARDS:** Set between **0 – 1**. Factory Default = **0**. Set the number of **High Score Award**(s) (Std. Adj. **25**), awarded for exceeding the High Score #3 (Standard Adjustment **33**). This adjustment is *not shown if **NO** is installed in **Allow High Scores** (Standard Adjustment **24**).*

#30 **HIGH SCORE #4 AWARDS:** Set between **0 – 1**. Factory Default = **0**. Set the number of **High Score Award**(s) (Std. Adj. **25**), awarded for exceeding the High Score #4 (Standard Adjustment **34**). This adjustment is *not shown if **NO** is installed in **Allow High Scores** (Standard Adjustment **24**).*

#31 **GRAND CHAMPION SCORE:** Set between **1,000,000 – 1,000,000,000** *(increments of 1,000,000).* Factory Default = **75,000,000**. Set the desired **Grand Champion Score** level a player needs to exceed to earn the **High Score Award** (Standard Adjustment **25**). A score higher than the default, cannot be reset by Standard Adjustment **37**, **HSTD Reset Count**. *The Grand Champion Score will revert to the Factory Default Score **ONLY** if a **Reset Grand Champion** is performed in the **RESET MENU** (via the **UTILITIES MENU**, see Section **3**, Chapter **5**) or if the game is without power for more than 12 hours after the CPU/Sound PCB Coin Cell Battery is expired or removed. This adjustment is not shown if **NO** is installed in **Allow High Scores** (Standard Adjustment **24**).*

#32 **HIGH SCORE #1:** Set between **1,000,000 – 1,000,000,000.** Factory Default = **55,000,000**. Set the desired **High Score #1** level a player needs to exceed to earn the **High Score Award** (Standard Adjustment **25**). A score higher than the default, will be reset by Standard Adjustment **37**, **HSTD Reset Count**. *The High Score will revert to the Factory Default Score **ONLY** if a **Reset High Scores** is performed in the **RESET MENU** (via the **UTILITIES MENU**, see Sec. **3**, Chp. **5**) or if the game is without power for more than 12 hours after the CPU/Sound PCB Coin Cell Battery is expired or removed. This adjustment is not shown if **NO** is installed in **Allow High Scores** (Standard Adjustment **24**).*

#33 **HIGH SCORE #2:** Set between **1,000,000 – 1,000,000,000.** Factory Default = **40,000,000**. Set the desired **High Score #2** level a player needs to exceed ... *(see Standard Adjustment **32** definition above).*

#34 **HIGH SCORE #3:** Set between **1,000,000 – 1,000,000,000.** Factory Default = **30,000,000**. Set the desired **High Score #3** level a player needs to exceed ... *(see Standard Adjustment **32** definition previous page).*

#35 **HIGH SCORE #4:** Set between **1,000,000 – 1,000,000,000.** Factory Default = **25,000,000**. Set the desired **High Score #4** level a player needs to exceed ... *(see Standard Adjustment **32** definition previous page).*

#36 **HSTD (HIGH SCORE TO DATE) INITIALS:** Set to **3 INITIALS** *or* **10 LETTER**. Factory Default = **3 INITIALS**. When set to **3 INITIALS**, the player is allowed only 3 initials to input. When set to **10 LETTER NAME**, the player is allowed to enter 10 initials to input. This adjustment is *not shown if **NO** is installed in **Allow High Scores** (Standard Adjustment **24**).*

Standard Adjustments 37-50 continued on the next page.

#37 **HSTD (HIGH SCORE TO DATE) RESET COUNT:** Set between **100 – 9900** or **OFF** *(increments of 100)*. Factory Default = **2000**. Set the number of games between "automatic resets" of High Scores back to the Factory Defaults for ***ONLY*** Standard Adj. **32-35, Default High Score #1-#4**. *The High Score will revert to the Factory Default Scores when the number of games stated is reached.* ***Reset High Scores*** *can be performed in the* ***RESET MENU*** *(via the* ***UTILITIES MENU****, see Sec.* ***3****, Chp.* ***5****) anytime or if the game is without power for more than 12 hours after the CPU/Sound PCB Coin Cell Battery is expired or removed. This adjustment is not shown if* ***NO*** *is installed in* ***Allow High Scores*** *(Standard Adj.* ***24****).*

#38 **FREE PLAY:** Set to **YES** or **NO**. Factory Default = **NO**. When set to **YES**, no coins are required for *Game Play.*

#39 **LANGUAGE:** Set to **ENGLISH**, **GERMAN**, **FRENCH**, **SPANISH** *or* **ITALIAN**. Factory Default = **ENGLISH**. Set the language for the game. Language of game is also shown in the Dot Display *(along with the Game Title and code version)* at the start-up routine which follows a game reset or power-up.

#40 **CUSTOM MESSAGE:** Set to **ON**, **CHANGE** *or* **OFF**. Factory Default = **ON**. *Shortcut:* ***Enter Custom Message*** *and instructions, review Sec.* ***3****, Chp.* ***5****,* ***GO TO UTILITIES MENU****,* ***Enter Custom Message****.*

#41 **FLASH LAMP POWER:** Set to **NORMAL**, **OFF** *or* **DIM**. Factory Default = **NORMAL**. When set to **DIM**, the Flash Lamps impulse power is reduced by **25**% and when set to **OFF** the Flash Lamps will not flash. For Flash Lamps used in this game, **Go To Flash Lamps Menu** via the **DIAGNOSTICS MENU** *(see Section* ***3****, Chapter* ***2****,* ***GO TO DIAGNOSTICS MENU****, Page* ***15****).*

#42 **COIL PULSE POWER:** Set to **NORMAL**, **HARD** *or* **SOFT**. Factory Default = **NORMAL**. When set to **HARD**, the coil pulse power is ***increased*** by **12.5**% of the normal pulse rate. When set to **SOFT** the coil pulse power is ***decreased*** by **12.5**% of the normal pulse rate. This adjustment is provided to compensate for *Low Line* or *High Line voltage* conditions where the solenoids (coils) appear to *kicking too weak or too hard.* Adjust as required.

#43 **KNOCKER VOLUME:** Set to **NORMAL**, **OFF** *or* **LOW**. Factory Default = **NORMAL**. When set to **LOW**, the volume is decreased 50%. When set to **OFF**, no sound is heard when the "knocker" is sounded. Test the knocker sound in the **Fire Knocker** Test via the **DIAGNOSTICS MENU** *(see Section* ***3****, Chapter* ***2****,* ***GO TO DIAGNOSTICS MENU****, Page* ***19****).*

#44 **GAME RESTART:** Set to **YES** *or* **NO**. Factory Default = **YES**. When set to **YES**, a new game may be started during any ball after the first ball is completed *(if credits allow).* Pressing the Start Button during the first ball will add additional players *(up to 4, if credits allow).* When set to **NO**, the game disables the Start Button after the first ball until the final ball is in play.

#45 **BILL VALIDATOR:** Set to **YES** *or* **NO**. Factory Default = **NO**. When set to **YES**, in ***Game Attract Mode*** an "Insert Bill Animation" is shown in the display (or just the absense of the Coin Animation). When set to **NO**, an "Insert Coin Animation" is shown. ***Not yet implemented.***

#46 **MUSIC VOLUME:** Set between **1** – **15**. Factory Default = **1**. After volume is set via Service Buttons this adjustment can be utilized to adjust the background music *(1 all the way on, 15 all the way off)* while keeping the Special Sound Effects at the same level.

#47 **BALL SAVE TIME:** Set between **0:01–0:15**, **AUTO** *or* **NO BALL SAVES**. Factory Default = **0:05**. When set to **NO BALL SAVES** this feature is unavailable. Set between **0:01** through **0:15** *(single increments)* for the ball to be sent back into play if the time set is not met *(per ball).* Set to **AUTO** to automatically adjust the Ball Save Timer based on the average ball time.

#48 **TIMED PLUNGER:** Set to **OFF** or **0:01 - 1:00**. Default is **OFF**. When set to **0:01** to **1:00**, the plunger will "Autoplunge" the ball *(at the time set)* when the ball is at the beginning of play, waiting for the player.

#49 **FLIPPER BALL LAUNCH:** Set to **OFF**, **LEFT FLIPPER**, **RIGHT FLIPPER**, **EITHER FLIPPER** *or* **BOTH FLIPPERS**. Default is **OFF**. This feature allows the player to operate the Auto Ball Launch with the Flipper Button(s) depending on which setting is chosen.

#50 **COINDOOR BALL SAVER:** Set to **YES** *or* **NO**. Factory Default = **NO**. When set to **NO**, this feature is not available. When set to **YES**, this feature allows the Coin Door to be opened during game play; the ball will drain but the game will be placed "on hold". When the Coin Door is closed, the pinball will return to the Shooter Lane, and the game will resume. *Useful at locations where technicians change the cash box regularly at exact times of the day where players can be on the game.*

Standard Adjustments 51-61 continued on the next page.

#51 **COMPETITION MODE:** Set to **YES** *or* **NO**. Factory Default = **NO**. When set to **NO**, this feature is not available. Set to **YES**, this feature will equalize random game features and global score values during multi-player games by predetermined competition rules set by programming. If an **Install Competition** was made via the **INSTALLS MENU** *(which automatically changes this setting to **YES**)*, and this setting was changed back to **NO**, the ***Competition Mode*** will be turned **OFF** *(cancelled)*.

#52 **CONSOLATION BALL:** Set to **YES** *or* **NO**. Factory Default = **NO**. When set to **YES**, the ***EXTRA BALL*** *(Playfield Light Insert, location varies)* will be lit on the last ball in play, if certain programming criteria is met.

#53 **FAST BOOT:** Set to **YES** *or* **NO**. Factory Default = **YES**. When set to **NO** or if you hold both **Flipper Buttons** during Power-Up, this feature is not available and will display all normal Power-Up screens. When set to **YES**, the game will not display the normal informative Power-Up screens, specifically the CPU Version screen and the Location/Game ID screen. Regardless of the setting, normal Power-Up safety checks are still performed. ***Not yet implemented.***

#54 **Q24 OPTION:** Set to **COIN METER**, **TOKEN DISPENSER** *or* **KNOCKER**. Factory Default = **COIN METER**. This Coil (Solenoid) Location is left "open" at the Factory to allow for these optional Mechanisms to be added to the game. If selecting **TOKEN DISPENSER**, Standard Adjustments 3, 14, 20 & 25 should be changed to **TOKEN**. *Call Technical Support at 1-800-542-5377 if more information is required on this option.*

#55 **TICKET DISPENSER:** Set to **YES** *or* **NO**. Factory Default = **NO**. *This adjustment is required only for games which have an optional Deltronics (DL-1275-2 PCB Style, SPI Part Nr. 515-7275-00) Ticket Dispenser installed. Unique CPU Sound Bd. Dip Switch Setting required, changes the Default to **YES**.*

#56 **PLAYER COMPETITION:** Set to **YES** *or* **NO**. Factory Default = **YES**. ***Competition Mode*** unrandomizes feature events, and standardizes game play and rule sets *(varies from game to game)* for fair competitions. With adequate credit, to enter ***Competition Mode***, hold both **Flipper Buttons** and ***watch the Dot Display*** for instructions before pressing the **Start Button**. General rules are covered in the Instruction Card. Other *Hints and/or Rules* can be made known on this game either visually (the Dot Display or Flashing Light Inserts) or can be audible. ***Not yet implemented.***

#57 **TECH ALERT WARNING:** A **SERVICE MENU** Function. Set to **NEVER**, **POWER-UP**, **COIN DOOR** *or* **POWER-UP AND COIN DOOR**. Factory Default = **NEVER**. When set to **NEVER**, the Tech Report Alert display will not appear upon Power-Up *or* opening the Coin Door, if the game detects any problems. When set to **POWER-UP**, the display will appear only upon Power-Up *(if problems detected)*. When set to **COIN DOOR**, the display will appear only when the Coin Door is opened *(if problems detected)*. When set to **POWER-UP AND COIN DOOR**, the display will appear upon Power-Up and if the Coin Door is opened *(if problems detected). Review Section **3**, Chapter **2**, **GO TO DIAGNOSTICS MENU**, **Technician Alerts**, Pages **17-18**, for more detailed information.*

#58 **TEAM SCORES:** Set to **YES** *or* **NO**. Factory Default = **NO**. Set to **YES**, then Team Play will be made available. ***Team Play only works in a 4-Player Game.*** The totals for Players 1 / 3 (Team 1) & Players 2 / 4 (Team 2) are then displayed individually ***as well as*** the combined score for **BOTH TEAMS** to enable **Team Play (Doubles)**. *See Section **2**, Chapter **1**, **Game Operation & Features**, for non-adjustable Features.*

#59 **LOCATION ID:** Set between **0** to **9999**. Factory Default = **0**. This adjustment allows the operator to assign a location identification number to the audit print-out sheet. *(Will not be affected by a Factory Reset.)*

#60 **GAME ID:** Set between **0** to **9999**. Factory Default = **0**. This adjustment allows the operator to assign a game identification number to the audit print-out sheet. *(Will not be affected by a Factory Reset.)*

#61 **TIME FORMAT:** Set to **12-HOUR** *or* **24-HOUR**. Factory Default = **12-HOUR**. This adjustments determines how the time is displayed. *Time used in Tournament Functions and Data Dumps where a time stamp is required.*

Feature Adjustments [#1-#44]

To initiate, from the **ADJUSTMENTS MENU**, select the "WPT" *Icon*. The Dot Matrix Display will indicate the *adjustment number (in this group)*, *adjust. name*, *adjust. setting* and *comment line.* The current adjustment will remain on the display until the next adjustment is viewed or when this sub-menu is exited.

#'1 **CITY ADVANCE DIFFICULTY:** Set to **EXTRA EASY**, **EASY**, **MEDIUM, HARD** *or* **EXTRA HARD**. Factory Default = **MEDIUM**. Controls the number of Hold 'Em hands that must be completed to win cities. On **MEDIUM**, first city requires 1 Hold 'Em hand, 2nd city requires 2 Hold 'Em hands, etc. On **EASY**, the first two cities only need 1 hand; **EXTRA EASY**, the first three cities only need one hand; on **HARD**, the first city requires 2 hands; on **EXTRA HARD**, the first city requires 3 hands. The number of hands needed for a city never goes above 5. The difficulty rises one level after each WPT Championship in a game.

#2 **CITIES FOR EXTRA BALL:** Set between **1 – 6**. Factory Default = **2**. Sets the number of cities to complete to light the Extra Ball, available on every set of cities, subject to Feature Adjustment #3.

#3 **MAXIMUM CITY EXTRA BALLS:** Set between **0 – 10**. Factory Default = **5**. Sets the maximum number of Extra Balls available from completing cities. Set to **0** to disable Extra Balls being awarded from completing cities. Subsequent 'City Extra Balls' are not available until after the WPT Championship has been played.

#4 **CITY EXTRA BALL MEMORY:** Set to **YES** *or* **NO**. Factory Default = **YES**. Specifies whether the Cities earned (completed) for an Extra Ball stays lit from ball-to-ball.

#5 **ACE-IN-THE-HOLE DIFFICULTY:** Set to **EXTRA EASY**, **EASY**, **MEDIUM, HARD** *or* **EXTRA HARD**. Factory Default = **MEDIUM**. Controls the number of hits on the 'Jail Bars' and the captive pinball needed to light **LOCK** and start Ace-in-the-Hole Multiball. The difficulty rises one level after each Ace-in-the-Hole Multiball in a game. **EXTRA EASY** / **EASY** / **MEDIUM** = 1 bar hit to light LOCK, 3 ball hits to start multiball. **HARD** = 2 bar hits, 4 ball hits. **EXTRA HARD** = 3 bar hits, 5 ball hits.

#6 **ACE-IN-THE-HOLE MULTIBALL DIFFICULTY:** Set to **EXTRA EASY**, **EASY**, **MEDIUM, HARD** *or* **EXTRA HARD**. Factory Default = **MEDIUM**. Controls the number of hits on the 'Jail Bars' and the captive pinball needed to relock balls during Ace-in-the-Hole Multiball. The difficulty rises one level after each Ace-in-the-Hole Multiball in a game. The number of hits increases after each ball release within an Ace-in-the-Hole Multiball. **EXTRA EASY** / **EASY** / **MEDIUM** = 1 bar hit to light lock, 2 ball hits to release ball. **HARD** = 2 bar hits, 4 ball hits. **EXTRA HARD** = 3 bar hits, 6 ball hits.

#7 **FIRST HARD SUPER TRICK:** Set between **1 – 5**. Factory Default = **2**. Sets the first **Super Trick** where chip tricks made during a ball no longer stay lit after a drain. Higher settings make it easier to restart **Super Trick** multiple times in a game.

#8 **COMBO EXTRA BALL MEMORY:** Set to **YES** *or* **NO**. Factory Default = **NO**. Specifies whether an extra ball lit from completing Super Trick stays lit after a drain.

#9 **MYSTERY DIFFICULTY:** Set to **EASY**, **MEDIUM, HARD** *or* **EXTRA HARD**. Factory Default = **MEDIUM**. This adjustment determines what the player needs to complete for the Mystery Feature. **EASY** = lit at ball start; **MEDIUM** = lit at game start; **HARD** = off at game start; **EXTRA HARD** = off at ball start.

#10 **MYSTERY EXTRA BALL MEMORY:** Set to **YES** *or* **NO**. Factory Default = **NO**. Specifies whether an Extra Ball lit by 'Cut the Cards' feature stays lit after a drain.

#11 **MYSTERY SPECIAL MEMORY:** Set to **YES** *or* **NO**. Factory Default = **NO**. Specifies whether a 'Special' lit by 'Cut the Cards' feature stays lit after a drain.

#12 **NO LIMIT MULTIBALL LOCK DIFFICULTY:** Set to **EXTRA EASY**, **EASY**, **MEDIUM, HARD** *or* **EXTRA HARD**. Factory Default = **MEDIUM**. Controls how hard it is to light LOCKS for No Limit Multiball. The difficulty rises one level after each No Limit Multiball in a game. **EXTRA EASY** = all locks are already lit. **EASY** = one light lock target hit lights all locks. **MEDIUM** = each hit to light lock target lights both lock lights for one lock, stackable. **HARD** = each hit to light lock target lights one lock light, unstackable. **EXTRA HARD** = two hits to light lock target lights one lock light, unstackable; and, locks do not remain lit after a drain.

#13 **SPIN-A-CARD DIFFICULTY:** Set to **EXTRA EASY**, **EASY**, **MEDIUM, HARD** *or* **EXTRA HARD**. Factory Default = **MEDIUM**. This adjustment determines what the player needs to complete for the Spin-A-Card Feature. **EXTRA EASY** = always lit. **EASY** = Lit at ball start. **MEDIUM** = Lit at game start. **HARD** = Off at game start. **EXTRA HARD** = Off at ball start.

#14 **EASY SIDE POT EXTRA BALL:** Set between **1 – 10**. Factory Default = **5**. Sets the number of shots at the start of each multiball where both orbits (loop shots around the playfield going left and right) will score side pots. After this number of shots, orbits (loops...) will alternate being lit.

Feature Adjustments 15-34 continued on the next page.

#15 **FIRST SIDE POT EXTRA BALL:** Set between **3 – 20**. Factory Default = **10**. Sets the number of 'Side Pot' Shots needed to light the first Extra Ball.

#16 **ADDITIONAL SIDE POT EXTRA BALL:** Set between **20 – 75** *(increments of 5)*. Factory Default = **50**. Sets the number of subsequent 'Side Pot' Shots needed to light additional Extra Balls.

#17 **MAXIMUM SIDE POT EXTRA BALLS:** Set between **0 – 10**. Factory Default = **5**. Set the number of extra balls earned from completing (collecting) a Side Pot can be collected during one game.

#18 **SIDE POT EXTRA BALL MEMORY:** Set to **YES** *or* **NO**. Factory Default = **YES**. Specifies whether the Side Pot earned (completed) for an Extra Ball stays lit from ball-to-ball.

#19 **ALL-IN MULTIBALL DIFFICULTY:** Set to **EXTRA EASY**, **EASY**, **MEDIUM, HARD** *or* **EXTRA HARD**. Factory Default = **MEDIUM**. This adjustment determines what the player needs to complete for All-In Multiball.

#20 **HURRY-UP AWARD INTERVAL:** Set between **1 – 3**. Factory Default = **2**. Controls how many completed 'Hurry-Up' features completed are required for each bonus award.

#'21 **FIRST HURRY-UP EXTRA BALL:** Set between **2 – 10**. Factory Default = **5**. Sets the number of awards for the first Hurry-Up Extra Ball. Effectively, this adjustment number multiplied by the number in Feature Adjustment #20 equals the number of Hurry-Ups needed to light the Extra Ball.

#22 **ADDITIONAL HURRY-UP EXTRA BALLS:** Set between **10 – 40** *(increments of 5).* Factory Default = **25**. Sets the number of awards for subsequent Hurry-Up Extra Balls.

#23 **MAXIMUM HURRY-UP EXTRA BALLS:** Set between **0 – 10**. Factory Default = **5**. Set the number of Extra Balls earned from completing a Hurry-Up Feature can be collected during one game.

#24 **HURRY-UP EXTRA BALL MEMORY:** Set to **YES** *or* **NO**. Factory Default = **YES**. Specifies whether the Hurry-Up Feature earned (completed) for an Extra Ball stays lit from ball-to-ball.

#25 **POKER HAND MULTIBALL DIFFICULTY:** Set to **EXTRA EASY**, **EASY**, **MEDIUM, HARD** *or* **EXTRA HARD**. Factory Default = **MEDIUM**. Controls how quickly the **Drop Targets** time out for jackpots during Poker Hand Multiball. The difficulty rises one level after each Poker Hand Multiball Super Jackpot throughout the game.

#26 **POKER HAND MULTIBALL SPECIAL MEMORY:** Set to **YES** *or* **NO**. Factory Default = **NO**. Specifies whether the 'Special' lit for starting Poker Hand Multiball stays lit after a drain.

#27 **POKER CORNER DIFFICULTY:** Set to **EXTRA EASY**, **EASY**, **MEDIUM, HARD** *or* **EXTRA HARD**. Factory Default = **HARD**. Controls how the 'Poker Corner' Feature is lit. The difficulty rises one level after each completion of all Poker Corner modes. **EXTRA EASY** = always lit. **EASY** = lit at ball start. **MEDIUM** = lit at game start. **HARD** = off at game start. **EXTRA HARD** = off at ball start.

#28 **BLIND SHOTS FOR TROPHY:** Set between **1 – 5**. Factory Default = **2**. Sets the number of 'Big Blinds' a player must make during 'Steal the Blinds' mode in order to win the trophy for that mode.

#29 **BUTTON SHOTS FOR TROPHY:** Set between **1 – 5**. Factory Default = **3**. Sets the number of 'On-The-Button' (flashing arrow) shots a player must make during 'Play the Button' mode in order to win the trophy for that mode.

#30 **OUTS DROPS FOR TROPHY:** Set between **8 – 25**. Factory Default = **16**. Sets the number of Drop Targets that must be hit during 'Know Your Outs' mode in order to win the trophy for that mode.

#31 **CHIP DROPS FOR TROPHY:** Set between **10 – 30**. Factory Default = **20**. Sets the number of Drop Targets that must be hit during 'A Chip & A Chair' mode in order to win the trophy for that mode.

#32 **TELL SHOTS FOR TROPHY:** Set between **1 – 5**. Factory Default = **2**. Sets the number of successful 'Tell' spots that must be hit during 'Spot the Tell' mode in order to win the trophy for that mode.

#33 **GEAR SHOTS FOR TROPHY:** Set between **2 – 20**. Factory Default = **8**. Sets the number of shots that must be made during 'Change Gears' mode in order to win the trophy for that mode *(low gear shots count as 2).*

#34 **SHOW UPPER FLIPPERS:** Set to **YES** *or* **NO**. Factory Default = **NO**. When set to **YES**, the Q13 and Q14 Upper Flippers will energize 3 times each alerting the player up the ball entering the upper playfield and to use the Upper Playfield Flippers to try to keep the ball in play before exiting. This occurs only on the first trip to the upper playfield from each of 3 possible entries: • via the Shooter Lane • via the Right Steel Ramp and Ball Lock • via the Left VUK *(behind the back panel).*

Feature Adjustments 35-44 continued on the next page.

#35 **FLOP AND TURN POSTS:** Set to **YES** *or* **NO**. Factory Default = **YES**. When set to **NO**, Q20 LEFT RAMP DOWN POST (BALL LOCK) MECHANISM and Q30 RIGHT RAMP DOWN POST (BALL LOCK) MECHANISM will not hold the balls while the FLOP and TURN features are revealed in the Dot Display.

#36 **MULTIBALL POSTS:** Set to **YES** *or* **NO**. Factory Default = **YES**. When set to **NO**, the Q20 LEFT RAMP DOWN POST (BALL LOCK) MECHANISM and Q30 RIGHT RAMP DOWN POST (BALL LOCK) MECHANISM will not momentarily lock / hold balls during mutliball.

#37 **DISABLE JAIL:** Set to **YES** *or* **NO**. Factory Default = **NO**. When set to **YES**, the Q12/Q19 JAIL UP/JAIL LATCH are disabled (awaiting replacement / repair) to allow for game programming compensation, providing close to normal game play without the feature.

#38 **DISABLE CARD DISPLAY:** Set to **YES** *or* **NO**. Factory Default = **NO**. When set to **YES**, the DOT DISPLAY on the playfield is turned off. Use this adjustment if poker card hands cannot be shown in your area *(unplugging the PCB can be done as well).*

#39 **DISABLE LOWER LEFT DROP TARGET 8-BANK:** Set to **YES** *or* **NO**. Factory Default = **NO**. When set to **YES**, the Q5 LOWER LEFT DROP TARGET 8-BANK is disabled (awaiting replacement / repair) to allow for game programming compensation, providing close to normal game play without the feature.

#40 **DISABLE UPPER LEFT DROP TARGET 8-BANK:** Set to **YES** *or* **NO**. Factory Default = **NO**. When set to **YES**, the Q6 UPPER LEFT DROP TARGET 8-BANK is disabled (awaiting replacement / repair) to allow for game programming compensation, providing close to normal game play without the feature.

#41 **DISABLE MIDDLE DROP TARGET 4-BANK:** Set to **YES** *or* **NO**. Factory Default = **NO**. When set to **YES**, the Q7 MIDDLE DROP TARGET 4-BANK is disabled (awaiting replacement / repair) to allow for game programming compensation, providing close to normal game play without the feature.

#42 **DISABLE RIGHT DROP TARGET 4-BANK:** Set to **YES** *or* **NO**. Factory Default = **NO**. When set to **YES**, the Q8 DRIGHT DROP TARGET 4-BANK is disabled (awaiting replacement / repair) to allow for game programming compensation, providing close to normal game play without the feature.

#43 **DISABLE LEFT POST (Q20 LEFT RAMP UP POST):** Set to **YES** *or* **NO**. Factory Default = **NO**. When set to **YES**, the Q20 LEFT RAMP DOWN POST (BALL LOCK) MECHANISM is disabled (awaiting replacement / repair) to allow for game programming compensation, providing close to normal game play without the feature.

#44 **DISABLE RIGHT POST (Q30 RIGHT RAMP DOWN POST):** Set to **YES** *or* **NO**. Factory Default = **NO**. When set to **YES**, the Q30 RIGHT RAMP DOWN POST (BALL LOCK) MECHANISM is disabled (awaiting replacement / repair) to allow for game programming compensation, providing close to normal game play without the feature.

Your Notes

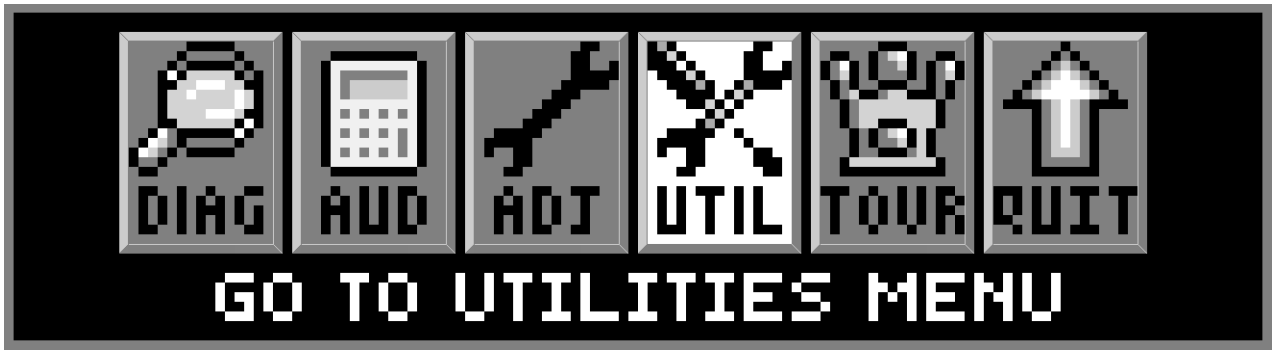

To initiate, from the **MAIN MENU**, select the "UTIL" *Icon*. The **UTILITIES MENU** provides ways to quickly and easily customize your game with **Installs** *(pre-sets for game Standard & Feature Adjustments),* set-up a **Custom Message** *(short-cut to Standard Adjustment **40**, **Custom Message**)*, set-up **Custom Pricing** *(short-cut to Standard Adjustment **18**, to the **Custom Pricing Sub-Menu**),* set-up the **Date and Time** *(required if the date and time is needed to be accurate for data dumps and for tournaments),* reset certain particular game data *or* perform a complete **Factory Reset** and to download game data, update or backup game code in the **USB MENU**.

All **UTILITIES**, **INSTALLS**, **RESETS MENU** and **USB MENU** *Icons* and there usages are explained throughout this chapter in the same order as seen in the Dot Matrix Display. ***NOTE:*** Depending on Game Type, Version, selections made, Dip Switch settings, location and/or areas, some *Icons* may appear non-functional *or* may not appear at all. ***Installs (Adjustments), Icons** and/or **functions**, **order** and **operation are subject to change**. **If in doubt use the Factory Default Settings** (review **Install Factory** on the next page).*

In displays where changes can be made *or* to perform a function, use the **GREEN Button** to go **[BACK]**, exit *or* escape, the **RED Buttons** to **[< / –]** MOVE BACK / LEFT **/ [+ / >]** MOVE FORWARD / RIGHT to view the next audit in the group, and the **BLACK Button** to **[SELECT]** the sub-menus.

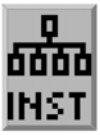

Go To Installs Menu

To initiate, from the **UTILITIES MENU**, select the "INST" *Icon*. The **INSTALLS MENU** provides **13** **Installs** to vary **Game Play Difficulty** *(set with Feature Adjustments) or* **Game Play Type** and **Install Factory** *(restores all adjustments to Factory Defaults)*.

For **detailed customization** *or* to check current **Adjustments Defaults** *(either changed by YOU in the Adjustments Menu or by this* **INSTALLS MENU** *or for Factory Default Settings), see Section **3**, Chapter **4**, **GO TO ADJUSTMENTS MENU**.* After completing one or more of the **Installs** in this chapter, go back to the **ADJUSTMENTS MENU** to see which **Standard** *and/or* **Feature Adjustments** have changed *(Feature Adjustments and/or settings are subject to change during production, and may differ than what is described in the tables at the end of this chapter). The Dot Display will indicate if a setting is a Factory Default or not. If the settings are not to your liking, perform **one** of the following:*

1.: **Manually** change the **Standard & Feature Adjustments** Settings *(perform this task in the **ADJUSTMENTS MENU**, see Section **3**, Chapter **4**, **GO TO ADJUSTMENTS MENU**).*

2.: **Install Factory** *(see the last install)* on how to reset all of the **Standard & Feature Adjustments** back to the *Factory Default Settings*.

Multiple **Installs can be set** to vary game play; however, for **Installs** that have *one or more* Adjustments in common, the ***last*** "Install" selected & *activated*, will **supersede** any previously changed Adjustment(s) from any prior **Installs**. Any adjustments which you changed and are not affected by the Install will remain as set.

For example, if you want a **5-BALL Game** *set to* **EXTRA EASY**: Select and *activate* the "5BAL" *Icon* first (which will typically change any ***Feature*** Difficulty Adjustments to **HARD**), then select & *activate* the "X.EZ" *Icon* to **change back** the Difficulty Adjustments to **EXTRA EASY**. However, if the "X.EZ" *Icon* was selected & *activated* first, then the "5BAL" *Icon* was selected & *activated*, the game will be set to a **5-BALL Game** *set to* **HARD**.

Remember, use the **GREEN Button** to go **[BACK]**, exit *or* escape and the **BLACK Button** to **[SELECT]** to INSTALL your new setting(s).

INSTALLS MENU continued on the next page.

Install Extra Easy, Easy, Medium (Normal or Factory Settings), Hard or Extra Hard

To initiate, from the **INSTALLS MENU**, select one of the "X.EZ," "EASY," "FACT," "HARD," *or* "X.HD" *Icons*. The Dot Matrix Display will indicate the **INSTALL EXTRA EASY**, **EASY**, **MEDIUM**, **HARD** *or* **EXTRA HARD** depending on choice. Follow the on-screen prompts to perform the **Install**. Set the **Game Play Difficulty** level.

Install 3-Ball

To initiate, from the **INSTALLS MENU**, select the "3BAL" *Icon*. The Dot Matrix Display will indicate the **INSTALL 3-BALL**. Follow the on-screen prompts to perform the **Install**.
Set the **Game Play Type** to 3 Balls per game *(Factory Default is 3 Balls per game, not including extra's...).*

Install 5-Ball

To initiate, from the **INSTALLS MENU**, select the "5BAL" *Icon*. The Dot Matrix Display will indicate the **INSTALL 5-BALL**. Follow the on-screen prompts to perform the **Install**.
Set the **Game Play Type** to 5 Balls per game *(not including extra balls earned by the player, if any).*

Install Competition

To initiate, from the **INSTALLS MENU**, select the "COMP" *Icon*. The Dot Matrix Display will indicate the **INSTALL COMPETITION**. Follow the on-screen prompts to perform the **Install**.
Set the **Game Play Type** to "Tournament" Rules. *Programming varies and is subject to change.*

Install Director's Cut

To initiate, from the **INSTALLS MENU**, select the "DCUT" *Icon*. The Dot Matrix Display will indicate the **INSTALL DIRECTOR'S CUT**. Follow the on-screen prompts to perform the **Install**.
Set the **Game Play Type** to programmer's choice. *Programming varies and is subject to change.*

Install Home Play

To initiate, from the **INSTALLS MENU**, select the "DCUT" *Icon*. The Dot Matrix Display will indicate the **INSTALL HOME PLAY**. Follow the on-screen prompts to perform the **Install**.
Set the **Game Play Type** to "Home" Rules. *Programming varies and is subject to change.*

Install Novelty

To initiate, from the **INSTALLS MENU**, select the "NOV" *Icon*. The Dot Matrix Display will indicate the **INSTALL NOVELTY**. Follow the on-screen prompts to perform the **Install**.
********** This setting is recommended where local laws restrict certain game features. **********
Set the **Game Play Type** to "Restricted" Rules. *Programming varies and is subject to change.*

Install Add-A-Ball

To initiate, from the **INSTALLS MENU**, select the "A.A.B." *Icon*. The Dot Matrix Display will indicate the **INSTALL ADD-A-BALL**. Follow the on-screen prompts to perform the **Install**.
********** This setting is recommended where local laws restrict certain game features. **********
Set the **Game Play Type** to "Restricted" Rules. *Programming varies and is subject to change.*

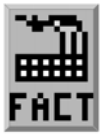

Install Factory

To initiate, from the **INSTALLS MENU**, select the "FACT" *Icon*. The Dot Matrix Display will indicate the **INSTALL FACTORY**. Follow the on-screen prompts to perform the **Install**. ⚠ **CAUTION!** All **Standard** *and* **Feature Adjustments** which were changed in the **INSTALLS MENU** *or* **ADJUSTMENTS MENU** are returned to the **Factory Defaults** *(as indicated in the Dot Display in the **ADJUSTMENTS MENU**). Note: To perform a complete **Factory Reset**, **GO TO THE RESETS MENU**. Escape back to the **UTILITIES MENU**, select the "RESET" Icon, then select the "FACT" Icon in the **RESETS MENU** (review the end of this chapter, Page **40**, **Reset Factory Settings**).*

INSTALLS MENU continued on the next page.

Overview of Factory Defaults which change with a Particular Install

STANDARD ADJUSTMENTS (ADJUSTMENTS NOT AFFECTED ARE NOT SHOWN) ▼

Nr.	STANDARD ADJUSTMENT NAME	INSTALL FACTORY	INSTALL MEDIUM *	INSTALL 3-BALL	INSTALL 5-BALL	INSTALL COMPETI-TION	INSTALL DIRECTOR'S CUT *	INSTALL HOME PLAY *	INSTALL NOVELTY	INSTALL ADD-A-BALL
1	REPLAY TYPE	AUTO		AUTO	AUTO	AUTO			NONE	AUTO
2	REPLAY PERCENTAGE	10%		10%	10%	10%				10%
3	REPLAY AWARD	CREDIT		CREDIT	CREDIT	CREDIT				EX. BALL
4	REPLAY LEVELS	1		1	1	1				1
5	AUTO REPLAY START	20,000,000		20,000,000	20,000,000	20,000,000				20,000,000
6	DYNAMIC REPLAY START	60,000,000								
7	REPLAY LEVEL #1	15,000,000								
8	REPLAY LEVEL #2	30,000,000								
9	REPLAY LEVEL #3	45,000,000								
10	REPLAY LEVEL #4	60,000,000								
11	REPLAY BOOST	YES		YES	YES	YES				YES
12	SPECIAL LIMIT	1		1	1	1			1	1
13	SPECIAL PERCENTAGE	10%		10%	10%	10%			10%	10%
14	SPECIAL AWARD	CREDIT		CREDIT	CREDIT	CREDIT			POINTS	EX. BALL
15	FREE GAME LIMIT	5		5	5	5			NO FREE...	NO FREE...
16	EXTRA BALL LIMIT	5		5	5	5			NO EXTRA	9
17	EXTRA BALL PERCENTAGE	25%		25%	25%	25%			25%	25%
18	GAME PRICING	USA 5		USA 5	USA 5	USA 5			USA 5	USA 5
19	MATCH PERCENTAGE	9%		9%	9%	9%			OFF	OFF
20	MATCH AWARD	CREDIT		CREDIT	CREDIT	CREDIT			CREDIT	CREDIT
21	BALLS PER GAME	3		3	5	3			3	3
22	TILT WARNINGS	2		2	2	2			2	2
23	CREDIT LIMIT	30		30	30	30			30	30
24	ALLOW HIGH SCORES	YES		YES	YES	YES			YES	YES
25	HIGH SCORE AWARD	CREDIT		CREDIT	CREDIT	CREDIT			CREDIT	CREDIT
26	GRAND CHAMPION AWARDS	1		1	1	1			0	0
27	HIGH SCORE #1 AWARDS	1		1	1	1			0	0
28	HIGH SCORE #2 AWARDS	0		0	0	0			0	0
29	HIGH SCORE #3 AWARDS	0		0	0	0			0	0
30	HIGH SCORE #4 AWARDS	0		0	0	0			0	0
31	GRAND CHAMPION SCORE	75,000,000		75,000,000	75,000,000	75,000,000			75,000,000	75,000,000
32	HIGH SCORE #1	55,000,000		55,000,000	55,000,000	55,000,000			55,000,000	55,000,000
33	HIGH SCORE #2	40,000,000		40,000,000	40,000,000	40,000,000			40,000,000	40,000,000
34	HIGH SCORE #3	30,000,000		30,000,000	30,000,000	30,000,000			30,000,000	30,000,000
35	HIGH SCORE #4	25,000,000		25,000,000	25,000,000	25,000,000			25,000,000	25,000,000
36	HSTD INITIALS	3 INITIALS		3 INITIALS	3 INITIALS	3 INITIALS			3 INITIALS	3 INITIALS
37	HSTD RESET COUNT	2000		2000	2000	2000			2000	2000
38	FREE PLAY	NO		NO	NO	YES			NO	NO
44	GAME RESTART	YES		YES	YES	NO			YES	YES
47	BALL SAVE TIME	0:05		0:05	0:05	0:05			0:05	0:05
48	TIMED PLUNGER	OFF		OFF	OFF	OFF			OFF	OFF
49	FLIPPER BALL LAUNCH	OFF		OFF	OFF	OFF			OFF	OFF
50	COINDOOR BALL SAVER	NO		NO	NO	YES			NO	NO
51	COMPETITION MODE	NO		NO	NO	YES			NO	NO
52	CONSOLATION BALL	YES		YES	YES	YES			YES	YES
56	PLAYER COMPETITION	YES		YES	YES	YES			YES	YES
58	TEAM SCORES	NO		NO	NO	NO			NO	NO

* ***Note:*** *Currently, no Standard Adjustments are changed if* ***Install EXTRA EASY, ... EASY, MEDIUM, HARD, EXTRA HARD, Install HOME PLAY*** *or* ***Install DIRECTOR'S CUT*** *is performed.*

SOME INSTALLS MAY CHANGE ADJUSTMENTS NOT NOTED ABOVE WITH FUTURE UPGRADES. YOU CAN ALSO REVIEW OR CHANGE ANY ADJUSTMENT IN THE ***ADJUSTMENTS MENU*** *(SEE SECTION* ***3****, CHAPTER* ***4****). ADJUSTMENTS WHICH WERE CHANGED* ***ARE NOT NOTED*** *WITH* ***FACTORY DEFAULT*** *ON THE BOTTOM LINE OF THE DOT DISPLAY. THE SETTINGS HIGHLIGHTED ABOVE WILL OVERRIDE ANY MANUAL CHANGES MADE IN THE ADJUSTMENTS MENU..*

STANDARD ADJUSTMENTS *NOT* LISTED ABOVE WHICH NEVER CHANGE WITH ANY INSTALL : ***39, 40–43, 45–46, 53–55, 57*** & ***59–61***

INSTALLS MENU continued on the next page.

Overview of Factory Defaults which change with a Particular Install

FEATURE ADJUSTMENTS (ADJUSTMENTS NOT AFFECTED ARE NOT SHOWN) ▼

Nr.	FEATURE ADJUSTMENT NAME	INSTALL FACTORY	INSTALL EXTRA EASY	INSTALL EASY	INSTALL MEDIUM *or* 3-BALL	INSTALL HARD	INSTALL EXTRA HARD	INSTALL 5-BALL	INSTALL COMPETI-TION	INSTALL DIRECTOR'S CUT	INSTALL HOME PLAY *
1	CITY ADVANCE DIFFICULTY	MEDIUM	EX. EASY	EASY	MEDIUM	HARD	EX. HARD	HARD			
2	CITIES FOR EXTRA BALL	2	1	2	2	3	4	3			
3	MAX. CITY EXTRA BALLS	5	5	5	5	5	5	5			
4	CITY EXTRA BALL MEMORY	YES	YES	YES	YES	NO	NO	NO			
5	ACE/HOLE DIFFICULTY	MEDIUM	EX. EASY	EASY	MEDIUM	HARD	EX. HARD	HARD			
6	ACE/HOLE MB DIFFICULTY	MEDIUM	EX. EASY	EASY	MEDIUM	HARD	EX. HARD	HARD			
7	FIRST HARD SUPER TRICK	2	4	3	2	2	1	2			
8	COMBO EXTRA BALL MEMORY	NO	YES	YES	NO	NO	NO	NO			
9	MYSTERY DIFFICULTY	MEDIUM	EASY	EASY	MEDIUM	HARD	EX. HARD	HARD			
10	MYSTERY EXTRA BALL MEMORY	NO	YES	YES	NO	NO	NO	NO			
11	MYSTERY SPECIAL MEMORY	NO	YES	NO	NO	NO	NO	NO			
12	NO LIMIT MB LOCK DIFF	MEDIUM	EX. EASY	EASY	MEDIUM	HARD	EX. HARD	HARD			
13	SPIN-A-CARD DIFF	MEDIUM	EX. EASY	EASY	MEDIUM	HARD	EX. HARD	HARD			
14	EASY SIDE POT SHOTS	5	10	8	5	3	1	3			
15	FIRST SIDE POT EXTRA BALL	10	5	8	10	12	15	12			
16	ADD'L SIDE POT EXTRA BALL	50	25	40	50	60	75	60			
17	MAX. SIDE POT EXTRA BALLS	5	5	5	5	5	5	5			
18	SIDE POT EXTRA BALL MEMORY	YES	YES	YES	YES	NO	NO	NO			
19	ALL-IN MB DIFF	MEDIUM	EX. EASY	EASY	MEDIUM	HARD	EX. HARD	HARD			
20	HURRYUP AWARD INTERVAL	2	1	2	2	2	3	2			
21	FIRST HURRYUP EXTRA BALL	5	5	4	5	6	5	6			
22	ADD'L HURRYUP EXTRA BALLS	25	25	20	25	30	25	30			
23	MAX. HURRYUP EXTRA BALLS	5	5	5	5	5	5	5			
24	HURRYUP EXTRA BALL MEMORY	YES	YES	YES	YES	NO	NO	NO			
25	POKER HAND MB DIFF	MEDIUM	EX. EASY	EASY	MEDIUM	HARD	EX. HARD	HARD			
26	POKER HAND MB SPCL. MEM...	NO	YES	YES	NO	NO	NO	NO			
27	POKER CORNER DIFF	HARD	MEDIUM	HARD	HARD	HARD	EX. HARD	HARD			
28	BLIND SHOTS FOR TROPHY	2	1	2	2	2	3	2			
29	BUTTON SHOTS FOR TROPHY	3	1	2	3	4	5	4			
30	OUTS DROPS FOR TROPHY	16	8	12	16	20	24	20			
31	CHIP DROPS FOR TROPHY	20	10	15	20	25	30	25			
32	TELL SHOTS FOR TROPHY	2	1	1	2	2	3	2			
33	GEAR SHOTS FOR TROPHY	8	4	6	8	10	12	10			
34	SHOW UPPER FLIPPERS	YES									
35	FLOP AND TURN POSTS	YES								YES	
36	MULTIBALL POSTS	YES								NO	
37	DISABLE JAIL	NO									
38	DISABLE CARD DISPLAY	NO									
39	DISABLE LL DROP BANK	NO									
40	DISABLE UL DROP BANK	NO									
41	DISABLE MID DROP BANK	NO									
42	DISABLE RIGHT DROP BANK	NO									
43	DISABLE LEFT POST	NO									
44	DISABLE RIGHT POST	NO									

** **Note:** Currently, no Feature Adjustments are changed if **Install COMPETITION**, **Install HOME PLAY**, **Install NOVELTY** or **Install ADD-A-BALL** is performed.*

SOME INSTALLS MAY CHANGE ADJUSTMENTS NOT NOTED ABOVE WITH FUTURE UPGRADES. YOU CAN ALSO REVIEW OR CHANGE ANY ADJUSTMENT IN THE ***ADJUSTMENTS MENU*** *(SEE SECTION **3**, CHAPTER **4**). ADJUSTMENTS WHICH WERE CHANGED **ARE NOT NOTED** WITH **FACTORY DEFAULT** ON THE BOTTOM LINE OF THE DOT DISPLAY. THE SETTINGS HIGHLIGHTED ABOVE WILL OVERRIDE ANY MANUAL CHANGES MADE IN THE ADJUSTMENTS MENU..*

FEATURE ADJUSTMENTS LISTED ABOVE WHICH NEVER CHANGE WITH ANY INSTALL : ***34*** & ***36–44***

Enter Custom Message

To initiate, from the **UTILITIES MENU**, select the "ABCD CUST MSG" *Icon*. The **SET CUSTOM MESSAGE** *(a short-cut for Standard Adjustment **40**, **Custom Message**)* provides an opportunity to have a text message appear in the the **Attract Mode**. Follow the on-screen prompts to complete [END].

Remember, use the **GREEN Button** to go **[BACK]**, exit *or* escape, the **RED Buttons** to **[< / –]** MOVE LEFT / CHOOSE NEXT **[+ / >]** MOVE RIGHT / CHOOSE PREVIOUS, and the **BLACK Button** to **[SELECT]** *as 'OK'.*

Set Custom Pricing

To initiate, from the **UTILITIES MENU**, select the "PRIC" *Icon*. The **CUSTOM PRICING MENU** *(a short-cut for Standard Adjustment **18**, **Game Pricing**, and setting selected is **CUSTOM**)* provides an opportunity to set **Custom Pricing**.

Note ! MONETARY AMOUNT MUST BE SELECTED FIRST! Press **[BACK]** to – DECREASE *or* **[SELECT]** to + INCREASE the **[< $ >] monetary amount** *(e.g. look at the right side of the display* from **$0.25** to **$0.50** *).* Press **[< / –]** to – DECREASE *or* **[+ / >]** to + INCREASE the **credit quantity** *(e.g. look at the left side of the display from **0 CREDITS AT:** to **1 CREDIT AT:**).*

IF EXAMPLE CUSTOM PRICING SETTING DESIRED IS :
1 Play for **$0.50**, **3** Plays for **$1.00** and **7** Plays for **$2.00**
THEN YOU WILL NEED TO PERFORM THE FOLLOWING :

REMINDER
In these menus:
Press [BACK] to – DECREASE [< $]
Press [SELECT] to + INCREASE [$ >]

Step 1 The starting display appears as below if no prior **Custom Pricing** was installed.

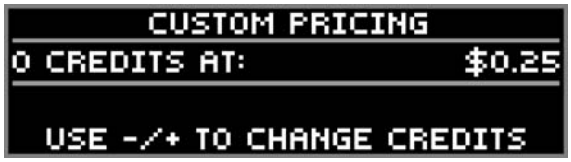

Step 2 Press **[SELECT]** to + INCREASE to **$0.50**. Press **[+ / >]** to + INCREASE to **1 CREDIT AT:**

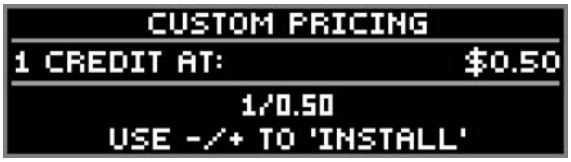

Step 3 Press **[SELECT]** to + INCREASE to **$1.00**. Press **[+ / >]** to + INCREASE to **2 CREDITS AT:**

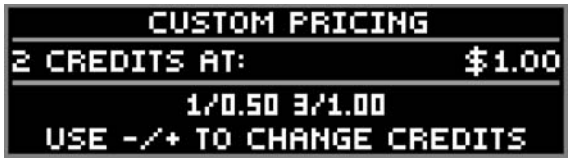

Step 4 Press **[SELECT]** to + INCREASE to **$2.00**. Press **[+ / >]** to + INCREASE to **4 CREDITS AT:**

Step 5 Press **[SELECT]** to + INCREASE the amount once *(example = $2.25).* Press **[< / –]** once ...

*... or press **[+ / >]** eleven times until INSTALL appears.*

Step 6 Press **[SELECT]** to INSTALL. Press **[< / –]** / **[+ / >]** *or* **[BACK]** to edit.

Step 7 Press **[SELECT]**, press **[BACK]** twice to exit the **SERVICE MENU** with your **Custom Pricing** installed.

To correct or make new changes, reenter, which brings you to **Step 6**. Press **[BACK]** repeatedly until the monetary amount shown is the desired amount and then continue following the above steps with your new or corrected settings. *If you are still having difficulty or if you have any questions, please call Technical Support 800-542-5377 or 708-345-7700, option 1.*

Set Date / Time

To initiate, from the **UTILITIES MENU**, select the "TIME" *Icon*. The **SET TIME MENU** appears with the **MONTH** flashing. Setting the date and time is required for 'Data Dumps' *(available soon!)* and Tournament Start and End Dates. If the setting of Standard Adjustment **61**, **Time Format**, is set to **12-HOUR** *(Factory Default)* the time will be expressed in the **AM / PM format**. If Standard Adjustment **61**, **Time Format**, is set to **24-HOUR** the time will be expressed in the 24-hour format.

Go To Resets Menu

To initiate, from the **UTILITIES MENU**, select the "RESET" *Icon*. The **RESETS MENU** provides six (6) functions to reset *only the* **Coin Audits**, reset *only the* **Game Audits**, reset *only the* **Grand Champion Score**, reset *only the* **High Score(s)**, reset *only the* paid **Credits** *(includes Service Credits) or* to reset ***ALL DATA*** back to the **Factory Default Settings**.

Reset Coin Audits

To initiate, from the **RESET MENU**, select the "COIN" *Icon.* ⚠ **ONLY** the **Coin Audits** [Earnings Audits **5–12**], will be reset to zero (0), *Factory Default Settings.* Follow the on-screen prompts to perform the **Reset**.

Reset Game Audits

To initiate, from the **RESET MENU**, select the "AUD" *Icon.* ⚠ **ONLY** the **Game Audits** [Earnings Audits **1–4**, Standard Audits **1–59** and Feature Audits **1–XX***], will be reset to zero (0), *Factory Default Settings.* Follow the on-screen prompts to perform the **Reset**. **varies per game title.*

Reset Grand Champion (Score)

To initiate, from the **RESET MENU**, select the "GC" *Icon* ⚠ **ONLY** the **Grand Champion Score** [adjustable via Standard Adjustment **31**], will be reset to *Factory Default Setting.* Follow the on-screen prompts to perform the **Reset**.

Reset High Scores

To initiate, from the **RESET MENU**, select the "HSTD" *Icon.* ⚠ **ONLY** the **High Score(s)** [adjustable via Standard Adjustments **32–35**], will be reset to *Factory Default Setting(s).* Follow the on-screen prompts to perform the **Reset**. ***Note:*** *High Scores (but not Grand Champion Score) are reset automatically every 2,000 games (Factory Default Setting) [adjustable via Standard Adjustment **36**, **HSTD Reset Count**].*

Reset Credits

To initiate, from the **RESET MENU**, select the "CRED" *Icon.* ⚠ **ONLY** the **Credits** *(includes Service Credits)* [adjustable via Standard Adjustment **23**, **Credit Limit**], will be reset to *zero (0), Factory Default Settings.* Follow the on-screen prompts to perform the **Reset**.

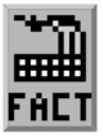

Reset Factory Settings

To initiate, from the **RESET MENU**, select the "FACT" *Icon.* ⚠ **ALL GAME DATA IS RESET!** *(with the exception of Earnings Audit **13**, Software Meter).* ***NOTE:*** *IF YOU HAD **SET-UP CUSTOM PRICING** OR HAD CHANGED ANY ADJUSTMENTS OR **PERFORMED INSTALLS**, IT IS SUGGESTED TO WRITE DOWN YOUR CHANGES PRIOR TO THE FACTORY RESET.* Follow the on-screen prompts to perform the **Reset**.

Go To USB Menu

To initiate, from the **UTILITIES MENU**, select the "USB" *Icon*. The **USB MENU** provides three (3) functions to download game data, update your game code or backup your code onto a USB Memory Stick. *Review the inside cover for information on how to update your game code.*

Dump to USB Memory Stick

To initiate, from the **USB MENU**, select the "DUMP" *Icon.* Follow the on-screen prompts to perform a **Data Dump** (download).

Update Game Code

To initiate, from the **USB MENU**, select the "UPDT" *Icon.* Follow the on-screen prompts *or* review the inside cover for more information.

Backup to USB Memory Stick

To initiate, from the **USB MENU**, select the "BKUP" *Icon.* Follow the on-screen prompts to perform a **Backup** (game code only). This backup feature does not retain adjustments and/or settings changes made.

MENU UNDER EVOLUTION

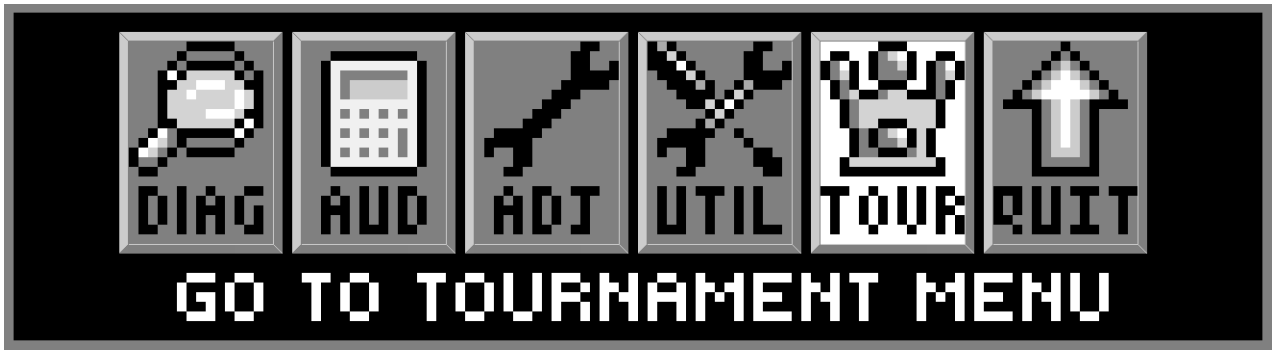

To initiate, from the **MAIN MENU**, select the "TOUR" *Icon*. The **TOURNAMENT MENU** provides ways to quickly and easily start and stop a tournament. Also, tournament data can be viewed *(audits, prize info, etc.).*

All **TOURNAMENT MENU** *Icons* and there usages are explained throughout this chapter in the same order as seen in the Dot Matrix Display. ***NOTE:*** Depending on Game Type, Version, selections made, Dip Switch settings, location and/or areas, some *Icons* may appear non-functional *or* may not appear at all. ***Icons*** *and/or* ***functions, order*** *and* ***operation are subject to change***.

In displays where changes can be made *or* to perform a function, use the **GREEN Button** to go **[BACK]**, exit *or* escape, the **RED Buttons** to **[< / –]** HIGHLIGHT PREVIOUS *or* DECREASE **/ [+ / >]** HIGHLIGHT NEXT *or* INCREASE to highlight the desired option, and the **BLACK Button** to **[SELECT]** it *or* activate.

Start Tournament

To initiate, from the **TOURNAMENT MENU**, select the "STRT" *Icon*. The **START TOURNAMENT MENU** allows the operator to start a tournament. Select **QUICK START** *or* **CUSTOM** Tournament Start. For the first time Tournament Set-Up, it is recommended to select **CUSTOM**. Follow the on-screen prompts. After completion of all options in **QUICK START** *or* **CUSTOM**, the Tournament is started, the **START TOURNAMENT MENU** is exited and returns to the **TOURNAMENT MENU**.

QUICK START :

Increase or decrease the: • **DAYS**, **HOURS** *and* **MINUTES** • **PRIZE POOL $ (DOLLAR)** *and* **¢ (CENT) AMOUNT**
• **INCREMENT THE PRIZE POOL PER PLAY INCREASES $** *and* **¢ AMOUNT**

CUSTOM START :

- Confirm the current date and time *(if it was not set previous via the* ***UTILITIES MENU*** *it can be set-up in this display as well).* Enter the **MONTH**, **DAY**, **YEAR** and **TIME**
- Choose the Tournament **Start** Date: **MONTH**, **DAY**, **YEAR** and **TIME**
- Choose the Tournament **End** Date: **MONTH**, **DAY**, **YEAR** and **TIME**

- Choose the **CREDITS** per play desired (01-10). Set the maximum number of *Credits* that may be accumulated per game. ***Note:*** *The current pricing is displayed; to change pricing* ***GO TO THE ADJUSTMENTS MENU***.

Increase or decrease the: • **PRIZE POOL $ (DOLLAR)** *and* **¢ (CENT) AMOUNT**
• **INCREMENT THE PRIZE POOL PER PLAY INCREASES $** *and* **¢ AMOUNT**
• **MAXIMUM (CAP) PRIZE POOL $** *and* **¢ AMOUNT**.

- Increase or decrease the number of **PRIZES** (01-05 **HIGH SCORE**; 02-05 **B'N'W**). Set the maximum # of *Prize Positions* to be awarded during a Tournament. ***Selections are as follows*** *(% distribution cannot be changed):*

HIGH SCORE:			BUMP N' WIN :		
			Cannot set to 01. Minimum of 2 winners required.		
Set to **01**	1 Winner	**100%** (1) Prize Pool			
Set to **02**	2 Winners	**65%** (1) **35%** (2)	Set to **02**	2 Winners	**65%** (1) **35%** (2)
Set to **03**	3 Winners	**50%** (1) **30%** (2) **20%** (3)	Set to **03**	3 Winners	**50%** (1) **25%** (2) **25%** (3)
Set to **04**	4 Winners	**50%** (1) **25%** (2) **15%** (3) **10%** (4)	Set to **04**	4 Winners	**40%** (1) **20%** (2) **20%** (3) **20%** (4)
Set to **05**	5 Winners	**50%** (1) **20%** (2) **15%** (3) **10%** (4) **5%** (5)	Set to **05**	5 Winners	**40%** (1) **15%** (2) **15%** (3) **15%** (4) **15%** (5)

- Select the **AWARD TYPE** (CASH, POINTS, PRIZE, TICKETS *or* NONE). Select **CASH** for the displays to represent the Prize Pool amount *(based on Jackpot Base and Max.)* in ***$Dollars***. Select **POINTS** for the display to represent the Prize Pool amount in ***Points***. Select **PRIZE**, if applicable. Select **TICKET** for the display to represent the Prize Pool amount in ***Tickets***. Select **NONE** ***NOT TO*** represent anything.

Custom Start continued on the next page.

*The following option is available only if **CASH** was selected as the **AWARD TYPE**.*

- Select the option to **SHOW PLAYER CASH** (YES *or* NO). Select **YES** for the display to represent the >>> **previous** <<< Tournament Winners & Cash amount *(or Points, Prizes, etc.)* will show in the ***Attract Mode***.

- Select the kind of **TOURNAMENT** desired (BUMP 'N' WIN *or* HIGH SCORE).

*The following options are available only if **BUMP 'N' WIN** was selected as the **TOURNAMENT TYPE**.*

- Select *or* confirm the **BASE POINT AMOUNT** (00 *or* 1,000,000 – 4,294,967,295 increments of 1,000,000.
- Select *or* confirm the **RANGE AMOUNT** (00 *or* 1,000,000 – 4,294,967,295 increments of 1,000,000).

- Select the **BALLS** per game (1 – 10).

STOP TOURNAMENT

To initiate, from the **TOURNAMENT MENU**, select the "STOP" *Icon*. The **STOP TOURNAMENT MENU** allows the operator to stop a tournament. ***Note:*** *This Icon only appears if a Tournament was set-up and is running (in place of the Start Icon).*

STOP TOURNAMENT ARE YOU SURE?

- Use the **BLACK Button** to **[SELECT]** to confirm. Press the **BLACK Button** again to continue.

The **STOP TOURNAMENT MENU** is exited and returns to the **TOURNAMENT MENU**.

VIEW TOURNAMENT DATA

To initiate, from the **TOURNAMENT MENU**, select the "DATA" *Icon*. If no data is available, the display will indicate NO PREVIOUS DATA. Press the **GREEN Button** to escape **[BACK]** to the **TOURNAMENT MENU**.

TOURNAMENT AUDITS [#1 – #14]

To initiate, from the **TOURNAMENT MENU**, select the "AUD" *Icon*. The Dot Matrix Display will indicate the *audit number (in this group)*, *audit name* and the *audit total or value*. The current audit will remain on the display until the next audit is viewed or when this sub-menu is exited.

01	**TOTAL PLAYS :** Total number of *Regular* and *Tournament Games* played while a *Tournament is in progress.* This total is derived by adding the below Tournament Audit **02** with ***Regular Plays.***
02	**TOURNAMENT PLAYS :** Total number of *Tournament Games* played while a *Tournament is in progress.*
03	**TOTAL QUALIFYING PLAYS :** Total number of times a player qualified *(invited to enter name).*
04	**TOTAL GAME EARNINGS :** Total Gross Earnings *accepted,* while a *Tournament is active (in progress).*
05	**TOTAL TOUR. EARNINGS :** Tournament Earnings *(Audit **04** less Reg. Game Earnings)* while a *Tournament is in progress.*
06	**JACKPOT (PRIZE POOL TOTAL) :** Total Prize Pool *(Jackpot)* Amount to be paid out while a *Tournament is in progress.*
07	**NET EARNINGS :** Provides the total Net Earnings *(Gross Earnings less Prize Pool)* while a *Tournament is active (in progress).*
08	**ACCUM. TOTAL PLAYS :** Accumulative total amount of *Regular & Tourn .Games* played since the first Tournament was played.
09	**ACCUM. TOUR. PLAYS :** Accumulative total amount of *Tournament Games* played since the first Tournament was played.
10	**ACCUM. QUALIFYING PLAYS :** Accumulative total number of times a player qualified *(invited to enter name).*
11	**ACCUM. EARNINGS :** Total Gross Earnings *accepted,* since the first Tournament was played.
12	**ACCUM. TOUR EARNINGS :** Accumulative total Tournament Game Earnings since the first Tournament was played.
13	**ACCUM. JACKPOT :** Accumulative total of Prize Pool *(Jackpot)* Amounts paid out since the 1st Tourn. was played.
14	**# TOURNAMENTS :** Number of Tournaments *(not individual Tournament Games)* since the first Tournament was played.

SIGN MESSAGES A–B

To initiate, from the **TOURNAMENT MENU**, select the "A-B TEXT" *Icon*. *At time of print, menu non-functional. If made available in future code updates, this menu will allow the operator to display "Location" and "Prize" Messages.* Follow the on-screen prompts to complete [END].

Remember, use the **GREEN Button** to go **[BACK]**, exit *or* escape, the **RED Buttons** to **[< / –]** MOVE LEFT / CHOOSE NEXT **[+ / >]** MOVE RIGHT / CHOOSE PREVIOUS, and the **BLACK Button** to **[SELECT]** *as 'OK'.*

Parts Identification & Location (The Pink Pages)

Table of Contents for Section 4, Chapter 1 of 2

Table of Contents for Section 4, Chapter 1 43

Backbox [S.A.M. System] - Parts ☐ ..... 44 – 45
▷ Backbox & Tournament Header Sign Front Views ▷ Backbox Parts Table ▷ Backglass Parts Table

Speaker Panel [S.A.M. System] - Parts ☐ 45
▷ Speaker Panel Side View ▷ Speaker Panel Parts Table

Cabinet - Parts ■ & Switches ☐ ..... 46 – 47
▷ Cabinet Inside Views ▷ Cabinet Parts & Switches Table

Playfield Top - Miscellaneous Parts ☐ & Brackets ■ 48
▷ Playfield Location & Bottom Arch Drawings ▷ Misc. Parts (Above) Table ▷ Misc. Brackets (Above) Table

Playfield Bottom - Miscellaneous Parts ■ & Brackets ■ 49
▷ Playfield Location Drawing ▷ Misc. Parts (Below) Table ▷ Misc. Brackets (Below) Table

Playfield Top & Bottom - Switches (Above) ☐ & Switches (Below) ■
and Back Panel - Switches ■ 50
▷ Playfield & Back Panel Location Drawings ▷ SwitchesTable

Playfield Top - Roll-Under Gates ☐ & Spinners ■ 51
▷ Playfield Location, Switch Gate & Spinner Drawings ▷ Roll-Under Gate Parts Table ▷ Spinner Parts Table

Playfield Top - Flat Rails ☐, Wood Rails ■, Ball Guides ■ & Wire Forms ■ 52
▷ Playfield Location Drawing ▷ Flat Rails Table ▷ Wood Rails Table ▷ Ball Guides Table ▷ Wire Forms Table

Playfield Top - Plastics (Screened & Clear) Kit, Decals & Mylar Kits 53
▷ Plastic Shape & Decal Art Drawings

Playfield Top & Bottom - Metal Posts ☐ & Fin Shank Screws ■ (Actual Size) ..... 54 – 55
▷ Metal Posts & Fin Shank Screw Drawings ▷ Metal Posts Table ▷ Fin Shank Screws Table ▷ Playfield Location Drawing

Playfield Top & Bottom - Nylon Stop, KEPS, Hex, T-, Flange, Pal & Wing Nuts (Actual Size) 55
▷ Nylon Stop Nuts Table ▷ Keps Nuts Table ▷ Hex Nuts Table ▷ T-Nuts Table ▷ Flange Nuts Table ▷ Pal Nuts Table
▷ Wing Nuts Table

Playfield Top - Hex Spacers ☐ (Actual Size) ..... 56 – 57
▷ Hex Spacers Drawings ▷ Hex Spacers Table ▷ Playfield & Back Panel Location Drawings

Playfield Top - Plastic Posts & Spacers ☐ & Metal Spacers ■ ..... 58 – 59
▷ Plastic Posts & Spacers Drawings ▷ Plastic Posts & Spacers Table ▷ Playfield & Back Panel Location Drawings

Playfield Top & Bottom - Rubber Parts ■, White ☐ & Blue ■ (Rings Actual Size) ..... 60 – 61
▷ Rubber Parts Drawings ▷ Rubber Bumper Pads Table ▷ Rubber Bumper Post Sleeves Table ▷ Rubber Rings Table
▷ Playfield & Back Panel Location Drawings

Playfield Top & Bottom - Small Bayonet Sockets & Bulbs ■ (Actual Size) ..... 62 – 63
▷ Bulbs & Socket Drawings ▷ Bulbs (#44 / LED & #455) Table ▷ Small Bayonet Sockets Table

Playfield Bottom - Large Bayonet Sockets & Bulbs ■ (Actual Size) 63
▷ Bulbs & Socket Drawings ▷ Bulbs (#89) Table ▷ Large Bayonet Sockets Table

Playfield Top & Bottom - Wedge Base Sockets & Bulbs ■ (Actual Size) 64
▷ Bulbs & Socket Drawings ▷ Bulbs (#555 & LED / #906) Table ▷ Wedge Base Sockets Table

Backbox [S.A.M. System] - Parts ☐

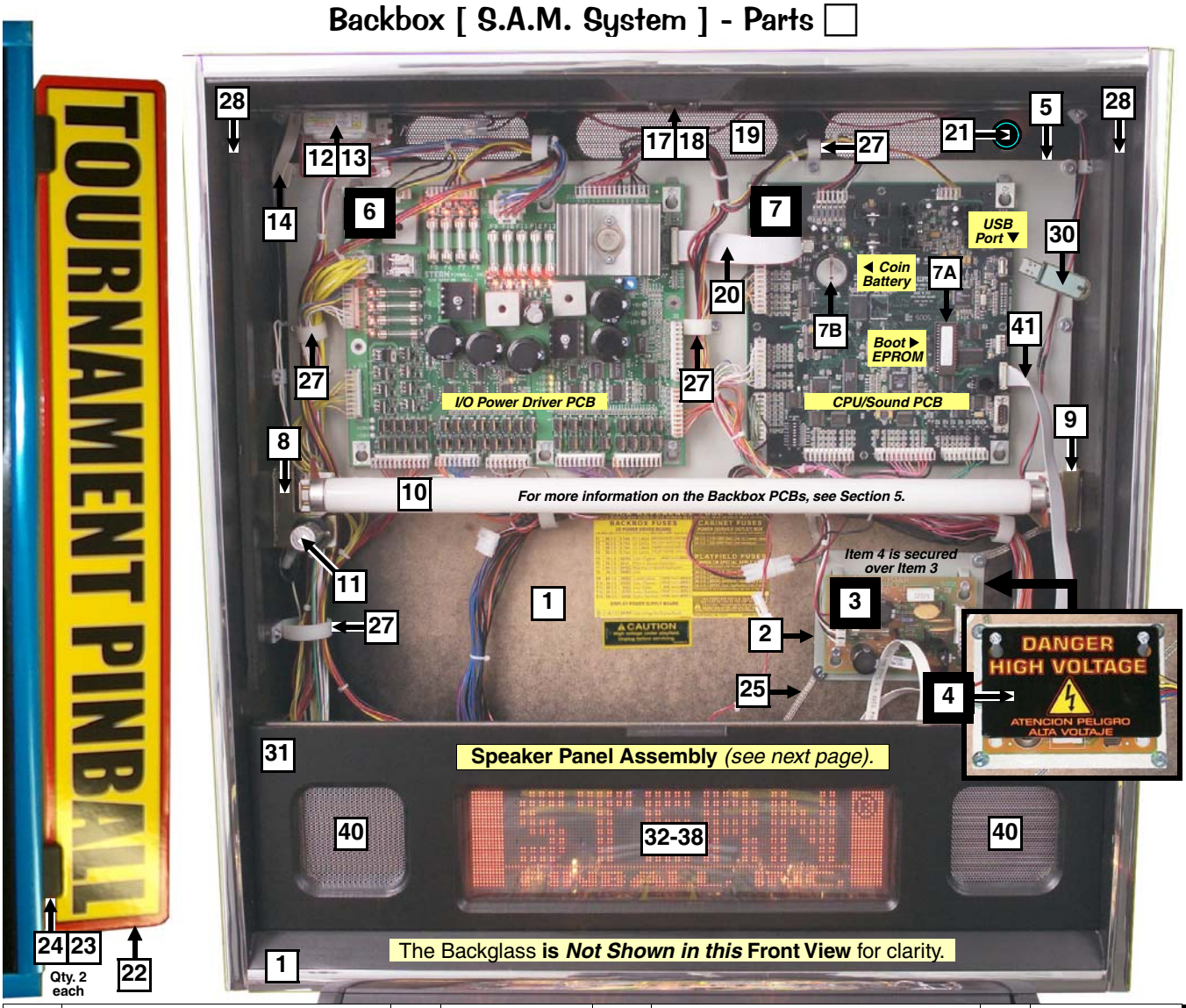

Sec. 4: Parts Id. ...

Nr.	BACKBOX PARTS	QTY.	SPI PART Nr.
1	Backbox **WPT®** (No Parts)	1	**525-5631-17-88**
	Item 1 Note: *Chrome T-Molding is installed and cannot be ordered separately.* Fuse Description (**820-6384-00**) **and** High Voltage Caution (UL) (**820-6082-01**) Decals.		
2	PCB Metal Mounting Plate [Display]	1	535-9769-00
3	Display Power Supply PCB	1	**520-5138-00**
	Item 3 is secured to @ bottom by: #8-32 X 3/8" SHWH Swg. (Zinc) (Qty. 2) (237-5975-00)		
4	Plastic Cover [**DANGER HIGH VOLTAGE**]	1	830-6053-00
	Items 3 & 4 are secured to @ top by: 1-1/4" X 3/8" Plastic Spacer Gray (Qty. 2) (254-5000-05) **and** #8-32 X 1-3/4" SHWH Ser. (Zinc) (Qty. 2) (237-5975-28)		
5	PCB Metal Mounting Plate [I/O+CPU]	1	535-9664-00
	Items 2 & 5 are secured to Item 1 by: #8 X 1/2" SHWH AB (Zinc) (Qty. 1/hole) (234-5101-00) **and** #10 Washer 7/32" I.D. X .5" O.D. X 1/16" Thick (Qty. 1/hole) (242-5003-00) ***Note:*** *Where a Wire Clamp (Item 27) is mounted, a #10 Washer is not required.*		
6	I/O Power Driver PCB [S.A.M. Sys.]	1	**520-5249-00**
7	CPU/Sound PCB [S.A.M. System]	1	**520-5246-00**
	7A: 8MB EPROM #M27C801-100F1 (**960-5016-00**) ***Ordering Note:*** *Programmed EPROM (**965-BOOT-SAM**)* **7B:** Coin Cell Battery (CR2430 3V) (**000-0644-01**) *For USB Memory Stick Information, see Item **30** on the next page.*		
	Items 6 & 7 are secured to Item 5 by: #8-32 X 3/8" HWH MS (Qty. 10) (237-5903-00) **and** 1/4" Slf. Rtn. Plastic Spacer White (Qty. 2 [I/O] / Qty. 4 [CPU]) (254-5007-02)		
8	Fluorescent Light Bracket Assy. Left	1	515-6545-00
	Assembly Parts Included : Fluorescent Light Bracket Left (**535-7739-00**), Lamp Holder** *(Self-Locking)* (**077-5214-00**) **and** Starter Base *(with Leads)**** (**077-5213-00**).		
9	Fluorescent Light Bracket Assy. Right	1	515-6545-01
	Assembly Parts Included : Fluorescent Light Bracket Right (**535-7739-01**), Lamp Holder** (Self-Locking) (**077-5214-00**) **and** Starter Base *(with Leads)**** (**077-5213-00**). ** **secured by:** #6-32 X 5/8" PPH MS (Sems) Zinc (Qty. 1) (232-5203-00) *** **secured by:** #4-40 X 1/2" PPH MS (Sems) Zinc (Qty. 2) (237-5813-00)		
	Items 8 & 9 are secured to Item 1 by: #10-24 X 1-1/4" Carriage Bolt Sq. Neck (Qty. 2/per) (231-5012-00), #10-24 Keps Nut (Qty. 2/per) (240-5207-00) **and** 3/4" X 3" Reinforced Strapping Tape (Qty. 1, Sold in 12" Lengths only) (626-5040-00)		

Nr.	BACKBOX PARTS	QTY.	SPI PART Nr.
10	Fluorescent Tube 24" (F20T9CW)	1	165-5061-00
11	Starter - Fluorescent (FS2 Light)	1	165-5011-01
12	Ballast Mounting Plate	1	535-8657-00
13	Ballast *CU45Z-W 1/2" Core 120v 60 Hz 13W*	1	010-5015-00
	Items 12 & 13 are secured to Item 1 by: #6 X 5/8" SHWH AB (Zc) (Qty. 2) (234-5102-04) **>>> CAUTION - VERY HOT" Decal** (820-6266-00) ***EU / UK Only :*** *Ballast, 5/8" Core 50/60 Hz (010-5015-01)*		
14	Ground Strap (5")	1	600-5006-05
15*	Roto Lock Male *(on Cabinet)*	1	355-5006-01
16	Roto Lock Fefomale *(R2-0002-02)*	1	355-5006-02
	Item 16 is secured by: #10-24 X 1-3/4" CBSN (231-5022-00), #10-24 Keps Nut (Qty. 2) (240-5207-00), #10-24 X 2" CBSN (231-5045-00), #10-24 Keps Nut (240-5207-00) **and** #10 Washer 7/32" I.D. X .5" O.D. X 1/16" (Qty. 5) (242-5003-00); *See opposite next page.*		
17	Lock Mounting Plate	1	535-8128-01
18	Lock 5/8" Barrel, 3/4"ø, 1.5" Flat Cam	1	355-5055-00
	Items 17 & 18 are secured by: #8 X 1/2" TP Torx T20 Black (Qty. 4) (237-6173-05)		
19	Back Vent Grill 2-1/2" X 18"	1	545-5072-02
20	Ribbon Cable, 20-Pin (6.5")	1	036-5000-06
	***Item 20 connects the** I/O Pwr. Drvr. PCB to the CPU/Sound PCB; For 14-Pin see next page.*		
21	Button Hole Plug (Blk) **(Happ #52-6214-00)**	1	500-6566-00
	***Item 21** plugs the Access Hole required if using optional **BETAbrite Sign** or **Data cables**.*		
22	Header Sign **TOURNAMENT PINBALL**	1	545-6133-00
23	Friction Hinge (Black) *behind* ▲▼	2	390-5053-00
24	Block / Sign & Hinge Stop (Black)	2	545-6174-00
	Item 22 is sandwiched between Items 23 & 24 through 2 holes on each side. Item 23 is secured to Item 1 by: #8-32 X 3/8" PPH MS Ext. Sems (Zinc) (Qty. 2/per) (232-5301-00) **and Item 24 to Items 22-23 by:** #8 X 5/8" PPH AB Black (Qty. 2/per) (232-5101-01)		

PARTS TABLE & VIEWS CONTINUED ON THE NEXT PAGE. ▶

Backbox [S.A.M. System] - Parts

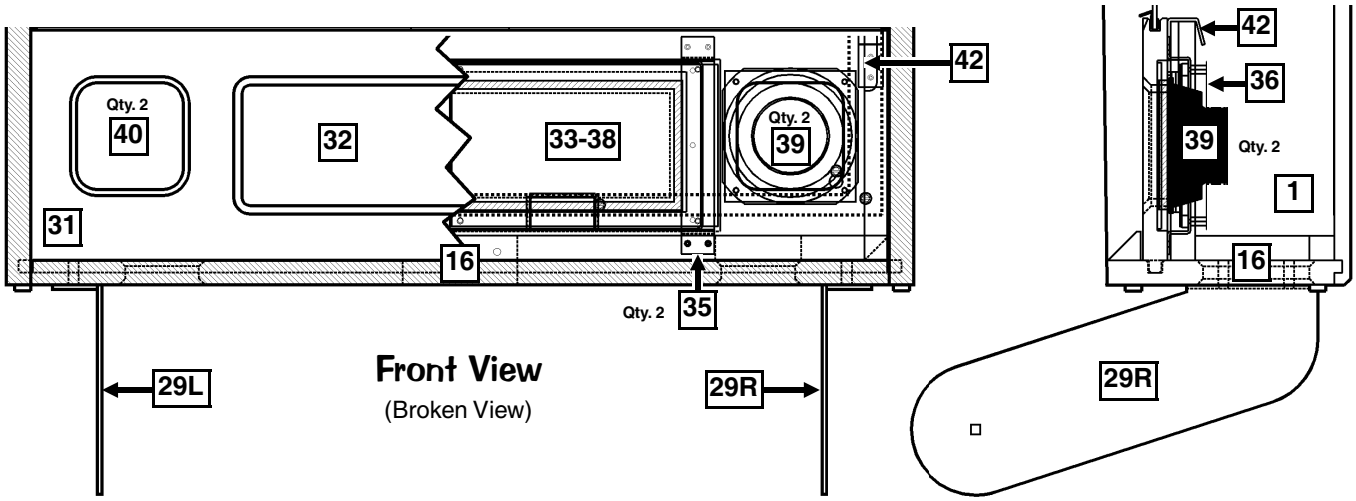

Speaker Panel [S.A.M. System] - Parts

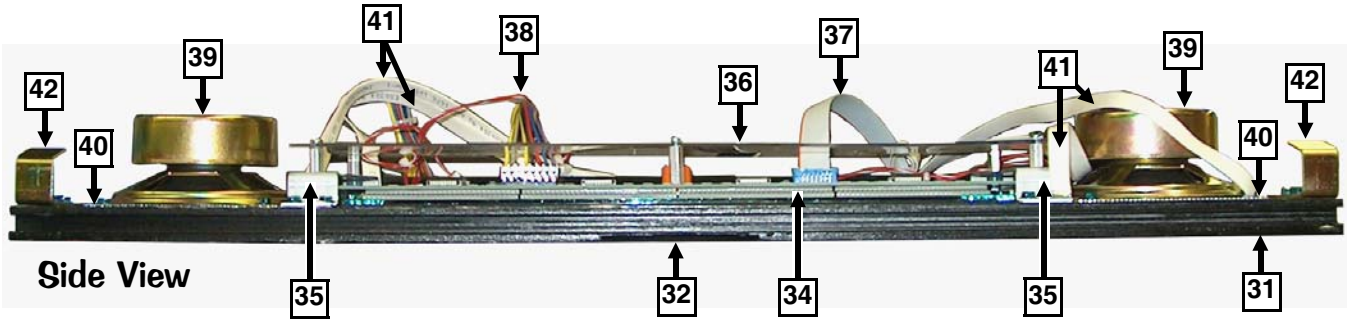

Nr.	BACKBOX PARTS	QTY.	SPI PART Nr.
	◀ *PARTS TABLE & VIEWS CONTINUED FROM THE PREVIOUS PAGE.*		
25	Braided Wire (1-1/2 Feet) **Item 25 is secured by:** Staple 5/16" (Qty. 23) (631-5000-00)	1	600-5001-00
26*	Zip Cable Tie (Screw Down Style) **Item 26 is secured @ inside bot. by:** #8 X 7/8" PPH AB (Zinc) (Qty. 1/per) (232-5103-00)	2	040-5005-00
27	Clamps [Multiple Sizes] **Item 27 secured by:** #8 X 1/2" SHWH AB (Zinc) (Qty. 1/per) (234-5101-00) ***For following sizes, replace -XX with:*** 1/4" Double = **-23** (Qty. 5); 1/2" Single = **-06** (Qty. 3); 3/4" Single = **-08** (Qty. 4); **1"** Single = **-09** (Qty. 1); 1-1/4" Double = **-30** (Qty. 2)	15	040-5000-**XX**
28	Foam 3/16" Thick X 1/4" Wide X 12" ***Above Item 28 is self-adhesive.*** *17.5" strip on each side. Sold in 12" Lengths only.*	3	626-5026-00
29L	Pivot Hinge Left	1	535-7999-00
29R	Pivot Hinge Right	1	535-7999-01
	Items 29L-29R are sec'd by: 1/4"-20 X 1-1/4" C.B. Sq. Neck (Qty. 4) (231-5003-00), 1/4"-20 Flange Nut (Qty. 4) (240-5300-00) **and** Fend Washer 1/4" I.D. X 1" O.D. (Qty. 1) (242-5009-00) **Items 29L-29R are secured to Cabinet by:** Spacer Hex Nut 1/2" O.D. - 1/4-20 X 1/2" TD (Black) (Qty. 1/per) (254-5042-00), Nylon Spacer (Black) (Qty. 1/per) (242-5084-00), 1/4-20 X 1/2" Carriage Bolt Sq. Neck (Black) (Qty. 1/per) (231-5072-00), Fend Washer 1/4" I.D. X 1" O.D. (Qty. 1/per) (242-5009-00) **and** 1/4"-20 Flange Nut (Qty. 1/per) (240-5300-00)		
30*	Memory Stick USB 1.1 [Generic] 128MB *Item **30** was not included with your game. Read the inside cover or go on-line for more info.* To order with the latest game code copied onto it, add **-88** to the Part Nr. (**970-0128-00-88**). File(s) can be downloaded from our website *(Files are 25MB or larger, DSL or Fast Modem recommended).* Not all manufacturers of Memory Sticks are compatible with our system. Test it out, if it doesn't work properly, return your purchase and order the memory stick through you local pinball distributor *(Stern Pinball Memory Sticks guaranteed compatible).*	1	970-0128-00

(ASM. REF. 505-6002-88-88, Items 1-42 Only, [29-30 not included in assebmly])

Nr.	SPEAKER PANEL PARTS	QTY.	SPI PART Nr.
31	Speaker Panel (Black Wood)	1	525-5515-00
32	Plastic Shield (Display Front Cover) **Item 33 is secured to inside Item 31 by:** #6 X 3/8" SHWH AB (Zinc) (Qty. 8) (234-5000-00)	1	545-5884-00
33*	Foam 3/16" Thick X 1/4" Wide X 12" ***Above Item 33 is self-adhesive.*** *Located between Items 32-34. Sold in 12" Lengths only.*	3	626-5026-00
34	128 X 32 Dot Matrix Display PCB	1	520-5052-00
	/// EURO ONLY RoHS /// 128 X 32 Dot Matrix LED		520-5052-04
	Item 34 is secured to Item 35 by *(at corners)*: 3/16" X 3/8" Spacer Gray (Qty. 4) (254-5000-18) **and** #6-32 X 1/2" SHWH Swage (Serr) Zinc (Qty. 4) (237-5976-03)		
35	Dot Matrix Display Mounting Bracket **Item 35 is secured to Item 31 by:** #8 X 5/8" SHWH AB (Green) (Qty. 4/per) (234-5102-04)	2	535-8368-01
36	Plastic Shield (Display Back Cover) **Item 36 is secured to Item 34 by:** 1/2" X 1/4" Hex Spacer #6-32 Tap (Qty. 4) (254-5008-03), 3/4" X 1/4" Hex Spacer #6-32 Tap (Qty. 2) (254-5008-04), #6-32 X 1/4" PPH MS (Sems) Zinc (Qty. 2) (232-5200-00) **and** #6-32 X 3/8" PPH (Qty. 6) (232-5201-00)	1	830-6040-00
37	Ribbon Cable, 14-Pin (32") ***Item 37 (14-Pin) connects the** 128 X 32 Dot Matrix Display PCB to the CPU/Sound PCB.*	1	036-5260-32
38	Display Cable *(Wiring Harness)*	1	036-5454-01
	/// EURO ONLY RoHS /// Display Adapter Harness		036-5520-00
39	Speaker (Shld.) 4" 8Ω #4060CESH-1	2	031-5004-01
40	Speaker Grill ***(Chrome** w/no Artwork)* **Items 39-40 are secured by:** #8 X 5/8" SHWH AB (Green) (Qty. 4/per) (234-5102-04)	2	535-8081-**04**
41	Ground Strap (25") **[2 per : Items 35 & 39]**	4	600-5006-25
42	Speaker Panel Hook Bracket **Item 42 is secured by:** #8 X 5/8" SHWH AB (Green) (Qty. 2/per) (234-5102-04)	2	535-7009-02

(ASM. REF. 515-6888-**05**, Items 31-42 Only [includes wiring])

Take Note:

* An asterisk (∗) indicates item(s) are not noted in the pictorials.

Nr.	BACKGLASS PARTS	QTY.	SPI PART Nr.
i*	Clear Backglass 25.906" X 19.187"	1	660-5038-02
ii*	**WPT® Film Art (#88)**	1	830-5288-00
iii*	Top Plastic Channel - 26"	1	545-5018-15
iv*	Bottom Plastic Lift Channel - 26-1/16"	1	545-5021-01
v*	Plastic Edging (Left/Right) - 18-1/8"	2	545-5018-14
	Items i-v are secured to Item i by: Taple (Double-Sided), 12" (Qty. 1) (626-5005-00) ***Note:** Only 6" required, sold in 12" lengths only.*		

(ASM. REF. 515-5450-00-**88**, Items i-v)

For Backbox Parts see the previous two pages.

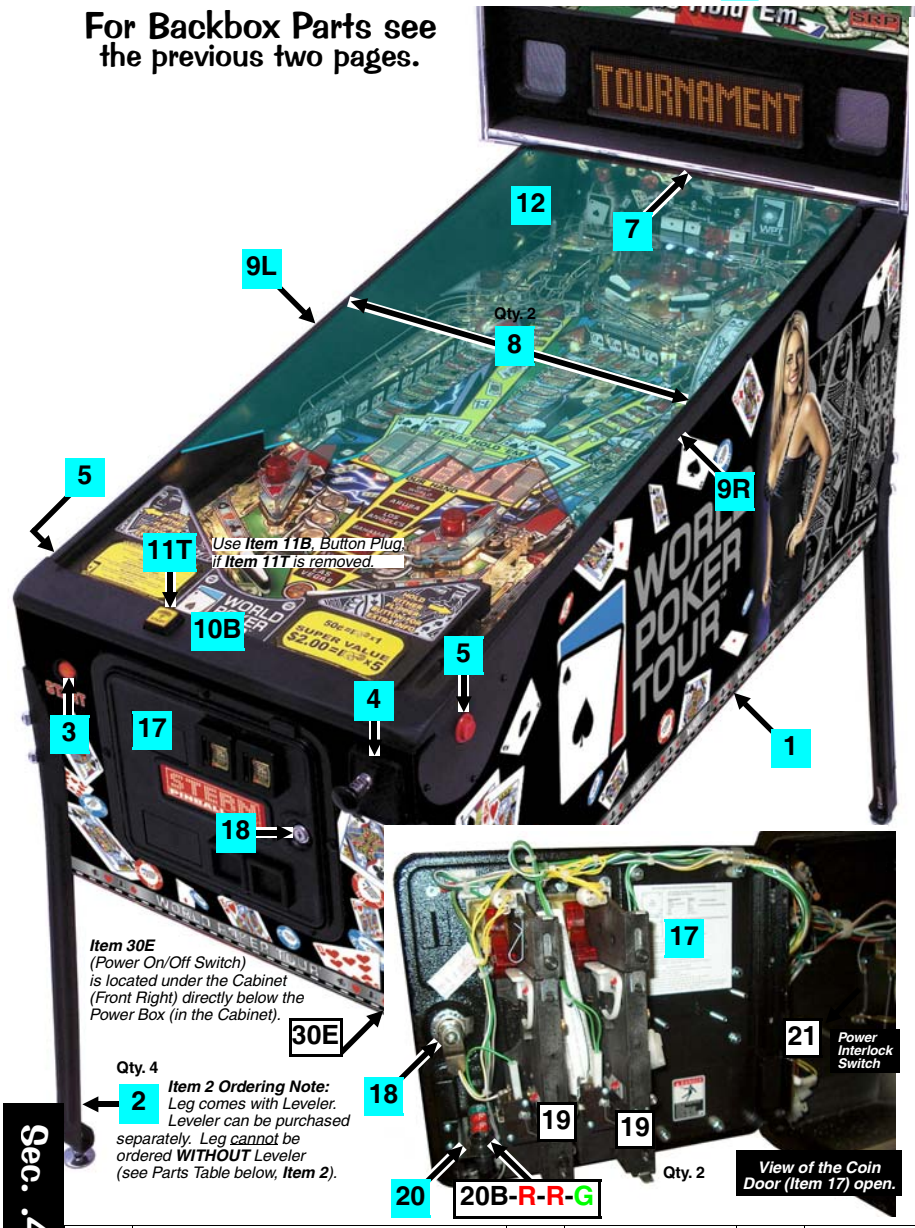

Item 30E (Power On/Off Switch) is located under the Cabinet (Front Right) directly below the Power Box (in the Cabinet).

Qty. 4 — **2** — ***Item 2 Ordering Note:*** *Leg comes with Leveler. Leveler can be purchased separately. Leg cannot be ordered **WITHOUT** Leveler (see Parts Table below, **Item 2**).*

View of the Coin Door (Item 17) open.

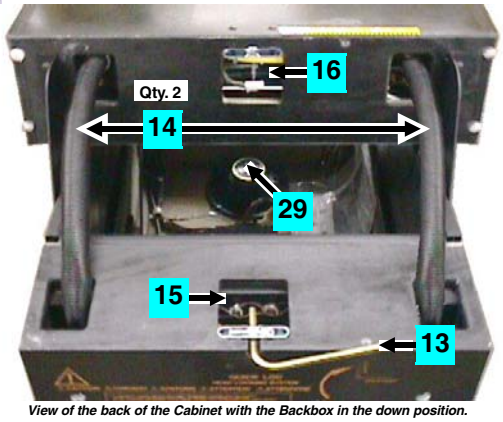

View of the back of the Cabinet with the Backbox in the down position.

Take Note:

* An asterisk (*) indicates item(s) are not noted in the pictorials.

Legend Note: Items noted with a cyan square ■ are Cabinet Parts. Items noted with a white square □ are Switches.

Sec. 4: Parts Id. ...

Nr.	CAB. PARTS & SWITCHES	QTY.	SPI PART Nr.
1	Screened Cabinet **WPT®** (No Parts)		**525-5395-15P-88**
2	Black Leg with Leveler Asm.	4	500-5921-50
	Item 2 is secured by: Leg Bolt Back Plate (**535-5703-00**) **and** Leg Bolt 3/8" X 16 X 2-1/2" Hex 5/8" Hd. (2/per) (231-5001-01) *Leg Leveler **ONLY** (3/8"-16 X 3") (500-5017-00).*		
3	**Start Button** (Red Rnd.), Switch + Lamp Asm.	1	500-6388-02
	Item 3 includes the Switch & Lamp (No Wiring; desolder old wiring where required). ***Assembly Parts Included :*** Microswitch (**180-5174-00**); #555 Wedge Base Clear Bulb (**165-5002-00**); ***Note:*** *1N4004 Diodes (**112-5003-00**) are used in all Diode applications. Switch Diode required on Switch; Lamp Diode on Terminal Strip; see Sec. **5**, Chp. **3**, Cabinet Wiring ..., for more information. Diode Terminal Strip 2-Lug (810) Isolated (**055-5203-00**).*		
4	Ball Shooter (Plunger) Assembly	1	**500-6146-00-04**
	FOR A BREAKDOWN OF PARTS SEE: Sec. 4, Chp. 2, Drawings for ... Assemblies...		
5	**Flipper Button** (Red) Asm. (No Switch)	2	500-5026-32
	Item 5 is secured by: Pal Nut for Flipper Button (Metal) (Qty. 2/per) (240-5003-01) **and is fitted with:** O-Ring 11/32" X 7/32" X 1/16" (Qty. 1/per) (545-5850-00)		
6S	Flipper Switch Single Assembly	0	500-6889-01
	Assembly Parts Included : Flipper Switch Stack Single *(Paliney Contact)* (**180-5160-01**) **and** Capacitor - Ceramic .05 Mfd 25 volt (**130-5001-00**) **Item 6S/6D are secured to Cab. by:** #6 X 1-1/4 SHWH AB (Zinc) (Qty. 2/per) (**237-5959-00**)		
6D	Flipper Switch Double Assembly	2	500-6890-01
	Assembly Parts Included : Flipper Switch Stack Double *(Paliney Contact)* (**180-5164-01**) **and** Capacitor - Ceramic .05 Mfd 25 volt (**130-5001-00**) **Item 6S/6D are secured to Cab. by:** #6 X 1-1/4 SHWH AB (Zinc) (Qty. 2/per) (**237-5959-00**)		
7	Rear Glass Channel 20-3/8" Length	1	545-5038-00
8	Plastic Channel 42-5/8" Lg. (Left/Rt.)	2	545-5017-00
9L	Side Armor (Left) with Button Guard	1	535-9596-00
9R	Side Armor (Right) with Button Guard	1	535-9596-01
	Items 9L & 9R are secured @ front & side by: Pem Stud 1/4 X 1" Flange Head Black (Qty. 1/per) (237-6116-01), 1/4-20 Flange Nut (Qty. 1/per) (240-5300-00) **and** #8 X 1/2" T20 Tamper Proof Black (Qty. 5/per) (237-6173-05); **@ rear (backbox) by:** #10-24 X 1" Sq. Neck Carrg. Bolt Black (Qty. 1/per) (231-5021-00) **and** #10-24 Hex Nut (Qty. 1/per) (240-5202-00)		
10B*	Front Molding (Black) ***includes*** Item **11B**	1	**500-6882-00-00**
	Item 10B includes: Self-Adhesive Foam Rubber 3/8" X 3/16" X 20-3/8" (3') (626-5001-00) *Items **10B** works with Item **22 (next page)** ONLY.*		
11T	**Tournament Button** (Yellow Square) + Wiring	1	**500-6884-00-TK**
	Item 11T includes Switch, Lamp & Wiring (036-5477-99-01). To order separately use: Microswitch No Actuator (**180-5119-03**); CM86 / C86 6.3V Mini-Wedge Base Clear Bulb (**165-5002-01**); ***Read the " Note: " below Item 3, Start Button, regarding diodes.***		
11B*	Button Plug (Black) for Square Hole	0	500-6883-00
12	Playfield Glass (Tempered) 21" X 43" X 3/16"	1	660-5001-00
13	Hex Key Allen Wrench 5/16"	1	777-0001-00
14	Corrugated Tubing Black **1"ø X 2.6' Lg.**	1	605-5008-03
	*Above Item **14** covers the Cable Wiring Harnesses going into the Backbox from the Cabinet.*		
15	Roto Lock Male (R2-0055-02)	1	355-5006-01
	Item 15 is secured by: #10-24 X 1-3/4" Carr. Bolt Sq. Neck (Qty. 2) (231-5022-00), #10-24 NSN (Qty. 2) (240-5206-00) **and** #10 Washer 7/32" X 1/2" X 1/16" (Qty. 2) (242-5003-00)		
16	Roto Lock Female *(on Backbox)*	*1*	*355-5006-02*

PARTS TABLE & VIEWS CONTINUED ON THE NEXT PAGE. ▶

Cabinet - Parts ■ & Switches □ Continued

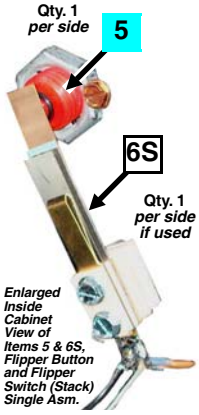

Enlarged Inside Cabinet View of Items 5 & 6S, Flipper Button and Flipper Switch (Stack) Single Asm.

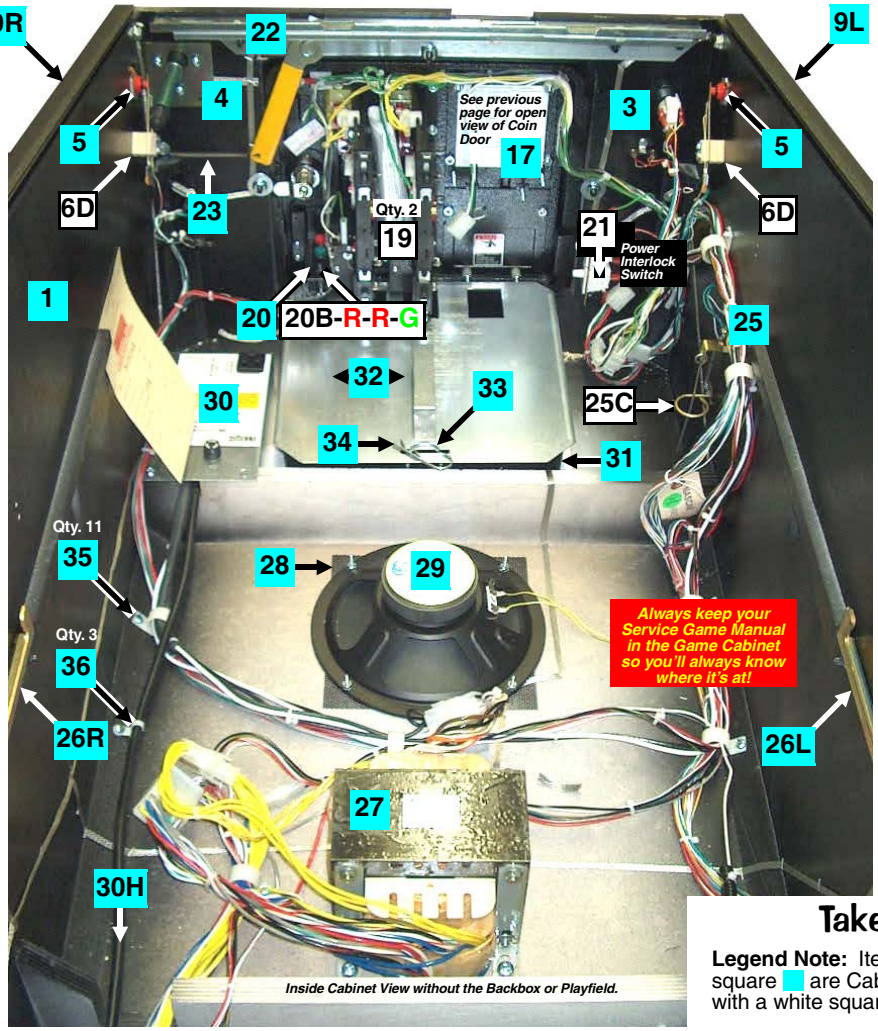

Inside Cabinet View without the Backbox or Playfield.

Enlarged Inside Cabinet View of Items 30: Power Box (30A), Service Outlet (30G), Fuse (30K) and Fuse Holder (30L).

Enlarged Inside Cabinet View of Item 3, Start Button (includes Switch & Lamp inside)

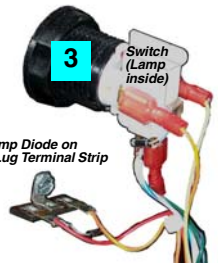

Enlarged Inside Cabinet View of Item 25 (25B, 25C, 25H & 25W), Plumb Bob Tilt Switch.

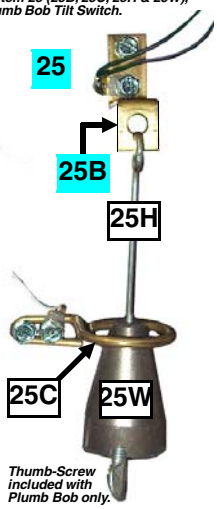

Take Note:

Legend Note: Items noted with a cyan square ■ are Cabinet Parts. Items noted with a white square □ are Switches.

Nr.	CAB. PARTS & SWITCHES	QTY.	SPI PART Nr.
	◄ *PARTS TABLE & VIEWS CONTINUED FROM THE PREVIOUS PAGE.*		
17	Coin Door 2-Cht $V Up-Stk. 4-Button Bracket	1	501-5018-172
	Item 17 is secured by: 1/4"-20 X 1-1/4" Carriage Bolt Square Neck (Qty. 4) (231-5003-00) 1/4"-20 Flange Nut (Qty. 4) (240-5300-00) **and** Fend Washer 1/4" I.D. X 1" O.D. (Qty. 3) (242-5009-00) ***Note:*** *For Coin Door other than USA call Technical Support for SPI Part Nr.*		
18	Lock 7/8" Barrel, 435X, Offset Cam	1	**355-5021-03K**
19	Coin Door Switch (USA) (Happ)	2	180-5024-**01**
	ALT. SW.: 19C: Coin Door Switch (USA) (Coin Control) (**180-5024-00**)		
	ALT. SW.: 19J: Coin Door Switch (¥ Japan) (**180-5091-00**)		
20	4-Button Bracket *(for Service Menu Buttons)*	1	535-6860-03
	SWITCH: 20B: Push-Button Service Switch (**Black**) (**180-5192-00**)		
	SWITCH: 20R: Push-Button Service Switch (**Red**) (Qty. 2) (**180-5192-02**)		
	SWITCH: 20G: Push-Button Service Switch (**Green**) (**180-5192-04**)		
	Ordering Note: *Securing hardware for switches included. Decal in kit sold separately.*		
21	Power Interlock-Memory Protect Switch Asm.	1	500-5808-05
	Assembly Parts Included : Mounting Bracket (**535-9794-00**), Power Interlock (Playfield) Switch (**180-5136-00**) **and secured by:** #6 X 5/8" SHWH AB (Zinc) (Qty. 2) (234-5002-00)		
22	Front Molding Lockdown Asm.	1	500-6881-00
	Item 22 is secured by: #10-24 X 1-1/4" Carr. Bolt (Qty. 2) (231-5012-00), #10-24 Keps Nut (Qty. 2) (240-5207-00), #8 X 1/2" SHWH AB Zinc (Qty. 1) (234-5101-00) **and** #10 Washer 7/32" I.D. X 1/2" O.D. X 1/16" (Qty. 1) (242-5003-00)		
23	Lockdown Spring *(connected to handle)*	1	265-5008-00
24	Grills 2-1/2" X 18" *(on Back & Bottom)*	2	545-5072-02
25	Plumb Bob Tilt Switch *Indivual Parts Only*		***Ind. Parts Only***
	SWITCH: 25B: Bracket for Hanger Wire (**535-5221-00**)		
	25C: Contact Wire Form (**535-7563-01**)		
	25H: Hanger Wire (**535-5319-02**)		
	25W: Plumb Bob Weight (**535-5029-00**) *(includes Thumb-Screw)*		
	Item 25B is secured to Cabinet by: #8 X 1/2" SHWH AB (Zinc) (Qty. 4) (234-5101-00)		
26L	Slide & Pivot Support Bracket (Left)	1	535-5989-00
26R	Slide & Pivot Support Bracket (Right)	1	535-5990-00
	Items 26L & 26R are secured by: #10-24 X 1-1/4" Carriage Bolt Square Neck Black (3/per) (231-5012-00) **and** #10-24 KEPS Nut (3/per) (240-5207-00)		

Nr.	CAB. PARTS & SWITCHES	QTY.	SPI PART Nr.
27	Transformer 5.7VAC *(with Ballast Winding)*	1	010-5012-01
	Item 27 is secured by: 1/4"-20 X 5/8" PPH MS (Zinc) (Qty. 4) (237-5854-00) **and** 1/4" Split Lock Washer (Qty. 4) (244-5000-00)		
28	Speaker Grill 7" X 7"	1	545-5072-03
29	Speaker 8" ø Round 8010 4Ω	1	031-5007-00
	Items 28 & 29 are secured by: #6-32 X 1-1/4" Fin Shank Screw (Qty. 4) (237-5883-00) **and** #6-32 Keps Nut (Qty. 4) (240-5008-00)		
30	Power Input Box Assembly	1	515-5360-07
	30A: Power Box *(No Parts)* Mounting Frame (**535-5932-00**)		
	30B*: Line Filter (**150-5000-00**)		
	30C*: Varistor* TNR159211KM (Domestic) (**150-5001-00**)		
	30D*: Varistor TRM15G431KM (Euro) (**150-5002-00**)		
	SWITCH: 30E: On/Off Rocker Switch + Bracket Assembly (**515-7085-00**)		
	30E incl.: Switch, APEM R2101C5NBB (**180-5001-03**) + Bracket (**535-8318-00**)		
	30F*: Power Box Decal (**820-6123-03**)		
	30G: Service Outlet (3-Prong / US) (**180-5008-01**)		
	30H: Line Cord 10' ROJ 3" + Ring Terminal Assembly (**515-6566-00**)		
	30H incl.: Line Cord 10' ROJ 3" (**034-5000-10**) + Ring Terminal (**055-5031-10**)		
	30i: Recessed (Black) Cup *(rear of Cabinet)* (**545-5122-00**)		
	30J*: Snap Bushing 9/16" (White) (**280-5001-01**)		
	30K: Fuse 8 Amp 250V Slo-Blo (Domestic) (**200-5000-05**)		
	***30K Int'l.*:** Fuse 5 Amp 250V Slo-Blo (International) (Qty. 2) (**200-5003-00**)		
	30L: Fuse Holder (**205-5001-00**)		
31	Cash Box Plastic Bottom	1	545-5090-00
32	Cash Box Cover (Validator)	1	535-5013-03
33	Cash Box Lock Bracket (U-Wire)	1	535-7562-00
	Item 33 is secured by: #8 X 3/4 PFH (Zinc) (Qty. 2) (237-5822-00)		
34	Large Hair-Pin Clip	1	535-7772-00
35	3/4" Clamp (Single)	11	040-5000-08
	Item 35 is secured to Item 1 by: #8 X 1/2" SHWH AB (Zinc) (Qty. 1/per) (234-5101-00)		
36	Zip Cable Tie (Screw Down Style)	3	040-5005-00
	Item 36 is secured by: #8 X 7/8" PPH AB (Zinc) (Qty. 1/per) (232-5103-00)		
37†	Meter +12VDC ***with*** *Bracket Optional*	0	**G-0053-013-102**
	† Meters (Diode included) are optional and were not included in this Pinball Machine. Order without the bracket use ***G-0053-013-102A****. More information or Qs? Call Technical Support.*		

Sec. 4: Parts Id. ...

Playfield Top - Miscellaneous Parts ☐ and Brackets ■

Nr.	THE PLAYFIELD	QTY.	SPI PART Nr.
PF	P/F Screened **w/** Inserts & **NO** Parts	1	830-5100-88
	P/F Complete **w/** Inserts & **ALL** Parts	1	**505-6004-88-88**

Nr.	MISC. PARTS (ABOVE)	QTY.	SPI PART Nr.
1	Arch (Black Metal) [*no Forks*]	1	535-8392-01
	Item 1 is secured to Item 9 below by: #10-32 X 5/16" PFH U/C MS (Zinc) (Qty. 2) (237-6013-00) ***Usage Note:*** *When replacing the Arch,* order new replacement **Nelson Protect Strips** *(not included)* (Qty. 2) (545-5212-02). *For Decals, see* ***Playfield Top - Plastics Kit, Decals & Mylar Kits****.*		
2	Instruction Card (USA) WPT®	1	**755-5188-00-Y**
	Note: *Visit* ***www.sternpinball.com*** *for a PDF copy of the Game Instruction Card which will also have any translated Instruction Cards made for this game. Find Game Link or Archives.* ***Spanish*** *755-5185-**02**-Y;* ***German*** *755-5185-**03**-Y;* ***Italian*** *755-5185-**04**-Y;* ***French*** *755-5185-**05**-Y.*		
3A	Coin Card (2-Sided) Yellow Stock	1	**755-5400-08-Y**
3B	Coin Card (2-Sided) Yellow Stock	1	**755-5400-04-Y**
	For Coin Card views, see below or ***online :*** *http://www.sternpinball.com/coinagecards.shtml* ***Ordering Note:*** *If this is a non-US Game, Coin Card(s) Part Numbers provided will differ.*		
4	Bumper [Pop] Cap (Red)	3	550-5057-02
	Item 4 is secured by: #4 X 3/4" PRH (Zinc) T-25 (Qty. 2/per) (237-5873-00)		
5	Mini-Mars Lite Cover with Tabs (Red)	4	550-5031-02
6	Bubble Level Assembly	1	500-6815-00
	***Assembly Parts Included* : Level** .8mm Empire #0224 (**545-6001-01**) or **Level Mount** (**545-6068-00**). **Flange secured by:** #6-32 X 1/4" PPH MS (no Sems) Zinc (237-5500-00) **and** #6-32 Keps Nut (240-5008-00) **Item 6 is secured to the wood rail by:** #6 X 1/2" HWH AB Zinc Red (Qty. 2) (234-5001-02)		
7	Pinball (Steel) 1 1/16" ø	4	260-5000-00
8*	Plug-Cap (3/16") Black Plastic	**0**	545-5232-01
	Note: *Item* ***8*** *should plug hole if a Center Post (@ Drain) is used, then removed.*		

Nr.	MISC. BRACKETS (ABOVE)	QTY.	SPI PART Nr.
9	Bracket, Playfield Hanger	2	535-8385-00
	Item 9 is secured to the P/F by: #8-32 X 7/8" HWH MS Zinc (Qty. 2/per) (237-5890-00)		
10	Bracket, Arch Retaining (Hold-Down)	2	535-8394-00
	Item 10 is secured to the P/F by: #8 X 1/2" SHWH AB (Zinc) (Qty. 3/per) (234-5101-00)		
11L	Bracket, Back Panel Mounting (Left)	1	535-9792-01
11R	Bracket, Back Panel Mounting (Right)	1	535-9792-00
	Items 11L & 11R are secured above the Playfield by: #8 X 1/2" SHWH AB (Zinc) (Qty. 3/per) (234-5101-00) ***Note:*** *For Back Panel Individual Parts and Assemblies, see* ***Drawings for Major Assemblies & Ramps*** *(**The Blue Pages**), Section **4**, Chapter **2**.*		
12L	Bracket, Bumper Guide Long Hole (Left)	1	535-9797-00
12S	Bracket, Bumper Guide Short Hole (Right)	1	535-9798-00
	Items 12L & 12S are secured above the Playfield by: #8 X 1/2" SHWH AB (Zinc) (Qty. 2/per) (234-5101-00) ***Note:*** *For 3D View, see* ***Drawings for Major Assemblies & Ramps*** *(**The Blue Pages**), Section **4**, Chapter **2**, Misc. Rails, Brackets, Switches & Gates.*		

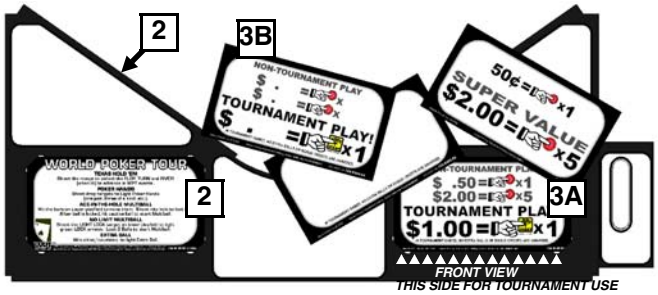

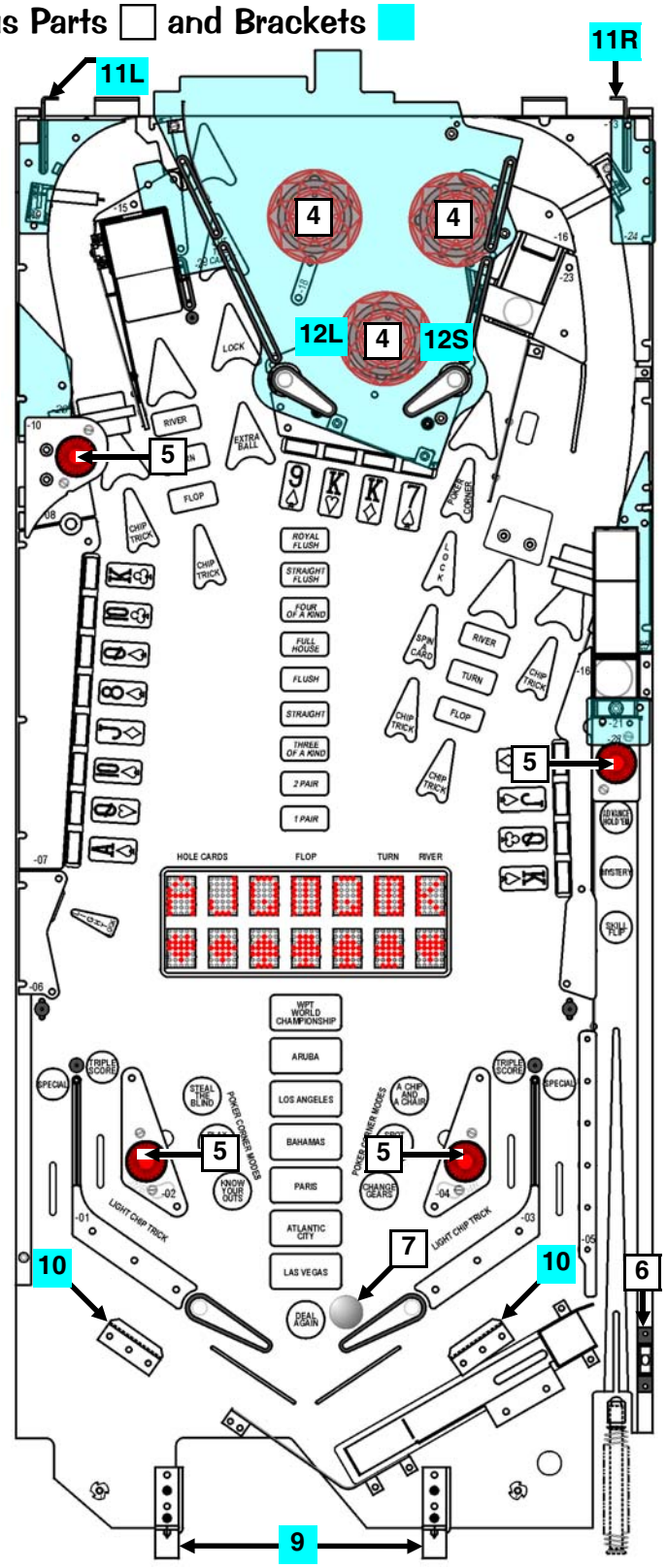

Optional Kits available through your Distributor:

Pinball Location Maintenance Standard Kit: 502-6002-88

Kit includes : *8 oz. Novus Wax #2 Fine (Red) (**675-0003-01**), Cloth, Rubber Rings (used above playfield), Bulbs (Bulb quantities vary and is limited to 25 per type), Fuses (5/per type) and 4 Pinballs.* ***Note:*** *Quanties, sizes and contents subject to change without notice.*

Pinball Location Maintenance Deluxe Kit: 502-6003-88

Deluxe Kit includes : *Pinball Location Maintenance* Standard *Kit as described plus a quanity of Flipper Rebuild Kits.* ***Note:*** *Quantity varies which equals the same quantity of flippers used in this game.* ◄ **THIS GAME KIT INCLUDES (4) FLIPPER REBUILD KITS** ◄

Take Note:

Legend Note:
Items noted with a white square ☐ are Misc. Parts (Above).
Items noted with a cyan square ■ are Misc. Brackets (Above).

Playfield Bottom - Miscellaneous Parts ■ and Brackets ■

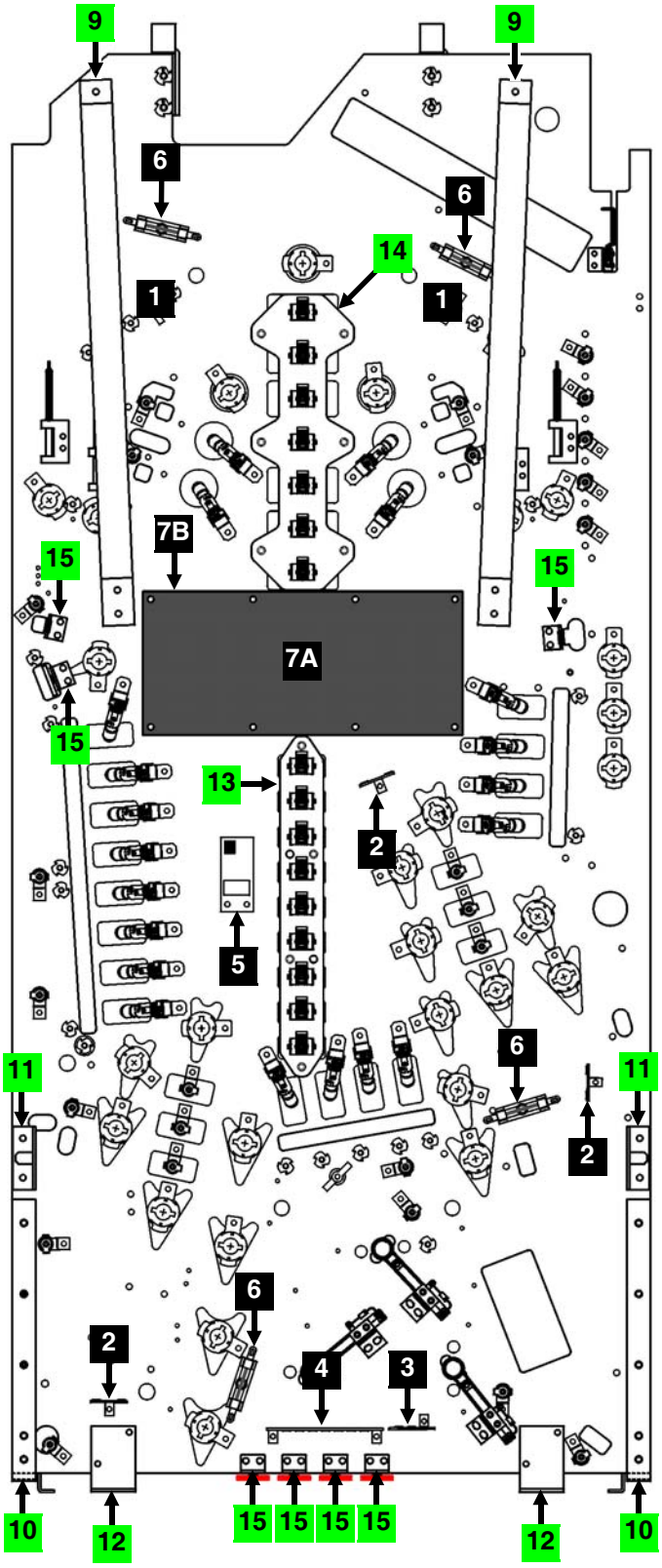

Nr.	THE PLAYFIELD	QTY.	SPI PART Nr.
PF	P/F Screened **w/** Inserts & **NO** Parts	1	830-5100-88
	P/F Complete **w/** Inserts & **ALL** Parts	1	**505-6004-88-88**

Nr.	MISC. PARTS (BELOW)	QTY.	SPI PART Nr.
1	Insulation Fiche Paper **(under Lower Flippers)**	2	545-5721-00
2	Diode Terminal Strip 2-Lug (810) Isolated	3	055-5203-00
3	Diode Terminal Strip 3-Lug (813) Isolated	1	055-5204-03
4	Diode Terminal Strip 7-Lug Isolated	1	055-5204-07
	Items 2-4 are secured by: #6 X 3/8 HWH AB Zinc (Qty. 1-2/per) (234-5000-00)		
	Note: *1N4004 Diodes (**112-5003-00**) are used in all Diode applications. 1N4001 Diodes can be used for Switches and/or Lamps.*		
5	PCB, 50V Step-Up Driver	1	520-5254-00
	Item 5 is secured by: #6 X 3/4" SHWH AB (Zinc) (Qty. 2) (234-5003-00)		
6	3A 250v Slo-Blo Fuse	4	200-5000-08
	Fuse Clip Holder (Socket)	4	205-5000-01
	Item 6 is secured by: #6 X 1/2" PPH AB (Qty. 1/per) (237-5805-00)		
	Note: *Item **6**, Fuse Clip Holder (Socket) 205-5000-01 is part of a set of 12 (205-5000-12). You can order them as individuals (...-01) or a set of 12 (...-12).*		
7**A**	PCB, LED 5X7 Block X14 Display	1	520-5250-14
7**B**	Insulation Fiche Paper (Cover)	1	545-6176-00
	Items 7A-7B are secured by: #6 X 3/8 HWH AB Zinc (Qty. 12) (234-5000-00)		
8*	Diode Terminal Strip/Fuse Decals A-E	1	820-6221-88
	Note: *For Decal Descriptions & Locations, see **Playfield Terminal Strips, Fuses & Misc. Wiring Descriptions & Locations,** Section **5**, Chapter **2**, Playfield Wiring.*		

Nr.	MISC. BRACKETS (BELOW)	QTY.	SPI PART Nr.
9	Bracket, Playfield Support Slide	2	535-6862-05
	Item 9 is secured by: #10 X 1/2" HWH A (Zinc) (Qty. 2/per) (237-5817-00), #8-32 X 5/8" SHWH Swage (Zinc) Wax (Qty. 1/per) (237-5975-03) **and** #8-32 T-Nut (Qty. 1/per) (240-5101-00)		
10	Bracket, Edge Slide (Extended)	2	535-5988-01
	Item 10 is secured by: #4 X 1/2" PFH (Zinc) (Qty. 5/per) (237-5840-00)		
11	Bracket, Pivot Pin Welded Assembly	2	500-5329-04
	Item 11 is secured by: #8-32 X 5/8" SHWH Swage (Zinc) Wax (Qty. 2/per) (237-5975-03)		
12	Bracket, Back Panel Mounting	2	535-8964-00
	Item 12 is secured by: #8 X 1/2" SHWH AB (Zc) (Qty. 2/per) (234-5101-00)		
13	Bracket, IDC Lamp Mounting X9	1	535-9788-00
	Item 13 is secured by: 1/4" Slt. Rtn. Plastic Spacer White (Qty. 4) (254-5007-02) **and** #6 X 3/4" SHWH AB (Zinc) (Qty. 4) (234-5002-00)		
14	Bracket, IDC Lamp Mounting X7	1	535-9789-00
	Item 14 is secured by: 1/4" Slt. Rtn. Plastic Spacer White (Qty. 6) (254-5007-02) **and** #6 X 3/4" SHWH AB (Zinc) (Qty. 6) (234-5002-00)		
15	Bracket, Switch Mounting	7	535-6896-00
	Item 15 is secured by: #8 X 1/2" SHWH AB (Zc) (Qty. 2/per) (234-5101-00)		
	Note: *For the Slingshot Blade or Target Switches secured to bracket, see the next page.*		
16*	Tie Post 3.5" (Ladder), White Plastic	11	545-5253-01
	Item 16 is secured by: #6 X 5/8" SHWH AB (Zinc) (Qty. 1/per) (234-5002-00)		

Take Note:

* An asterisk (*) indicates item(s) are not noted in the pictorials.

Legend Note:
Items noted with a black square ■ are Miscellaneous Parts (Below).
Items noted with a green square ■ are Misc. Brackets (Below).

Playfield Top & Bottom - Switches (Above) ☐ & Switches (Below) ■ and Back Panel - Switches ■

Nr.	SWITCHES	QTY.	SPI PART Nr.
A-#	Sw., Roll-Over Lite Force *(Right Mount Style)* **Bracket secured to Playfield by:** #6 X 1/2" SHWH AB (Zinc) (Qty. 2/per) (234-5001-02) *Switch Matrix Numbers **24, 25, 28** & **29***	4	500-6227-04
B-62	Switch & Target Asm. 1" Sq. Lugs Left (White) ***Assembly Parts Included :*** Stack Sw. Radius End Lugs Left (**180-5133-01**) **and** Square Target White (**545-5470-08**)	1	**515-7497-08-00**
C-61	Switch & Target Asm. 1" Sq. Lugs Rt. (White) ***Assembly Parts Included :*** Stack Sw. Radius End Lugs Right (**180-5133-02**), Square Target White (**545-5470-08**), Rivet 1/8" ø X 3/16" (**249-5001-00**) **and** Washer 9/64" I.D. X 5/16" O.D. X .048" Thick (Zinc) (**242-5017-00**)	1	**515-7497-08-01**
D-60	Switch & Target Asm. Rect. Lugs Rt. (White) ***Assembly Parts Included :*** Stack Sw. Radius End Lugs Right (**180-5133-02**) **and** 1" X 1-1/2" Rect. Target **White** (**545-5145-08**) ***Ordering Note for Items B-62, C-61 & D-60 Associated Parts Not Included :*** Switch Back Plate (**635-6452-00**) **and** Foam Pad (**626-5029-00**)	1	**515-7498-08-01**
E-42	Switch & Target Asm. Sq. (White) ***Assembly Parts Included :*** Stack Sw. Radius End (**180-5133-00**), Square Target White (**545-5470-08**), Switch Mounting Bracket (**535-6896-00**) **and** Switch Back Plate (**635-6452-00**) **Bracket secured to Playfield by:** #8 X 1/2" SHWH AB (Zinc) (Qty. 2/per) (234-5101-00)	1	500-5232-08
F-#	Switch & Target Asm. 1" Sq. Lugs Str. (Red) ***Assembly Parts Included :*** Stack Sw. Radius End Straight Lugs (**180-5206-00**), Square Target Red (**545-5470-02**), Switch Mounting Bracket (**535-6896-00**) **and** Switch Back Plate (**635-6452-00**) *Switch Matrix Numbers **45, 46, 47** & **48***	4	500-6983-02
	Note : B-F Plastic Targets are rivted with : Rivet 1/8" ø X 3/16" (Qty. 1/per) (**249-5001-00**) **and** Washer 9/64" I.D. X 5/16" O.D. X .048" Thick (Zinc) (Qty. 1/per) (**242-5017-00**)		
G-23	Switch *(for Shooter Lane)* ***Associated Part Not Included :*** Switch Mounting Bracket (**535-6173-00**) **Bracket secured to Playfield by:** #6 X 1/2" SHWH AB (Zinc) (Qty. 2) (234-5001-02)	1	180-5157-00
H-#	Switch (1⅝" Actuator) *(for Ramp Gates)* **Item F-# is secured by:** *Same screws which secures the Sw. Protect Plate & Plastic Spacer* *Switch Matrix Numbers **9, 51** & **53***	3	180-5010-01
i-#	Switch Asm., Stack (Blade) *(for Pops)* ***Assembly Parts Included :*** Switch (**180-5015-04**), Sw. Mounting Bracket (**535-7342-00**), Spoon Actuator (**545-5610-02**), Switch Body Protect Plate (**535-7344-00**), Diode 1N4004 (Qty. 1/per) (**112-5003-00**) **and** #6-32 X 3/4" HWH Zc (Qty. 2/per) (**237-5976-05**) **Bracket secured to Playfield by:** #8 X 1/2" SHWH AB (Z) (Qty. 2) (234-5101-00) *Switch Matrix Numbers **30, 31** & **32***	3	515-6459-09
J-#	Switch (Roller Actuator, Lite-Force) ***Associated Parts Not Included :*** Heat Shrink Tubing 1/8" ø PUI-24 (Qty. 1" per) (**605-5006-00**) **and** Diode 1N4004 (Qty. 1/per) (**112-5003-00**) **Item J-# is secured by:** #2-56 X 1/2" Unslt HWH #4 Hex TR3 Blk (Qty. 2/per) (237-5937-02) *Switch Matrix Numbers **18, 19** & **20***	3	180-5119-02
K-#	Switch (End-of-Stroke), Stack (Blade) **Item K-# is secured by:** #6-32 X 5/8" HWH Sw (Sr) Zc (Qty. 2/per) (237-5976-04) *Dedicated Switch Numbers **D10, D12, D14** & **D16***	4	180-5149-00
L-#	Switch, Stack (Blade) ***Associated Parts Not Included :*** Switch Body Protect Plate (Qty. 1/per) (**535-5045-00**) **and** Diode 1N4004 (Qty. 1 for every 2 connected together) (**112-5003-00**) **Item L-# is secured by:** #6-32 X 5/8" HWH Swage (Ser.) Zinc (Qty. 2/per) (237-5976-04) *Switch Matrix Numbers **14** & **41** (Single Switch); **26** & **27** (Dual Switches = Slingshots)*	6	180-5054-00
M-#	Switch *(for Playfield Wire Gates)* *Switch Matrix Numbers **44** & **50***	2	180-5087-00
N-#	Switch (1¼" Actuator) *Switch Matrix Numbers **8** & **43***	2	180-5010-04
O-#	Switch (Sim. Roller Actuator) VUKs *Switch Matrix Numbers **3, 49** & **55***	3	180-5209-00
P-#	Dual OPTO TRANS PC Board Asm. ***Assembly Parts Included :*** Dual OPTO Trans. PCB (Qty. 1) (**520-5173-00**), OPTO PCB Tube Spacer (Brass) (Qty. 3) (**530-5308-02**) **and** Rubber Grommet (Qty. 3) (**545-5518-00**)	1	515-0173-00
Q-#	Dual OPTO REC PCB Assembly ***Assembly Parts Included :*** Dual OPTO Rec. PCB (Qty. 1) (**520-5174-00**), OPTO PCB Tube Spacer (Brass) (Qty. 3) (**530-5308-02**) **and** Rubber Grommet (Qty. 3) (**545-5518-00**) **Items P-#–Q-# are secured by:** #6-32 X 5/8" HWH Sw. (Ser.) Zc. (Qty. 3/per) (237-5976-04) *Switch Matrix Numbers **21** & **22** **Switch Note:** Both **P** & **Q** PCBs required per switch.*	1	515-0174-00
R-#	Dual OPTO TRANSMITTER PCB	1	520-5247-00
S-#	Dual OPTO RECEIVER PCB *Switch Matrix Numbers **57** & **58** **Switch Note:** Both **R** & **S** PCBs required per switch.*	1	520-5248-00
T-63	OPTO ("U") Interuptor PCB	1	520-5251-00
U-#	OPTO ("U") Interuptor X4 PCB *Switch Matrix Nrs. **4, 5, 6, 7, 10, 11, 12, 13, 33, 34, 35, 36, 37, 38, 39** & **40** (Drop Targets)*	4	520-5252-04
V-#	Transceiver OPTO PCB Assembly *Switch Matrix Numbers **52, 54, 56** & **59** **Switch Note:** Pairs required per switch.*	8	520-6775-00

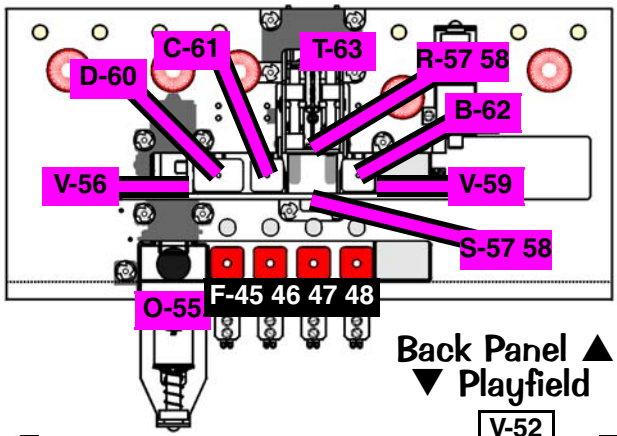

Back Panel ▲
▼ Playfield

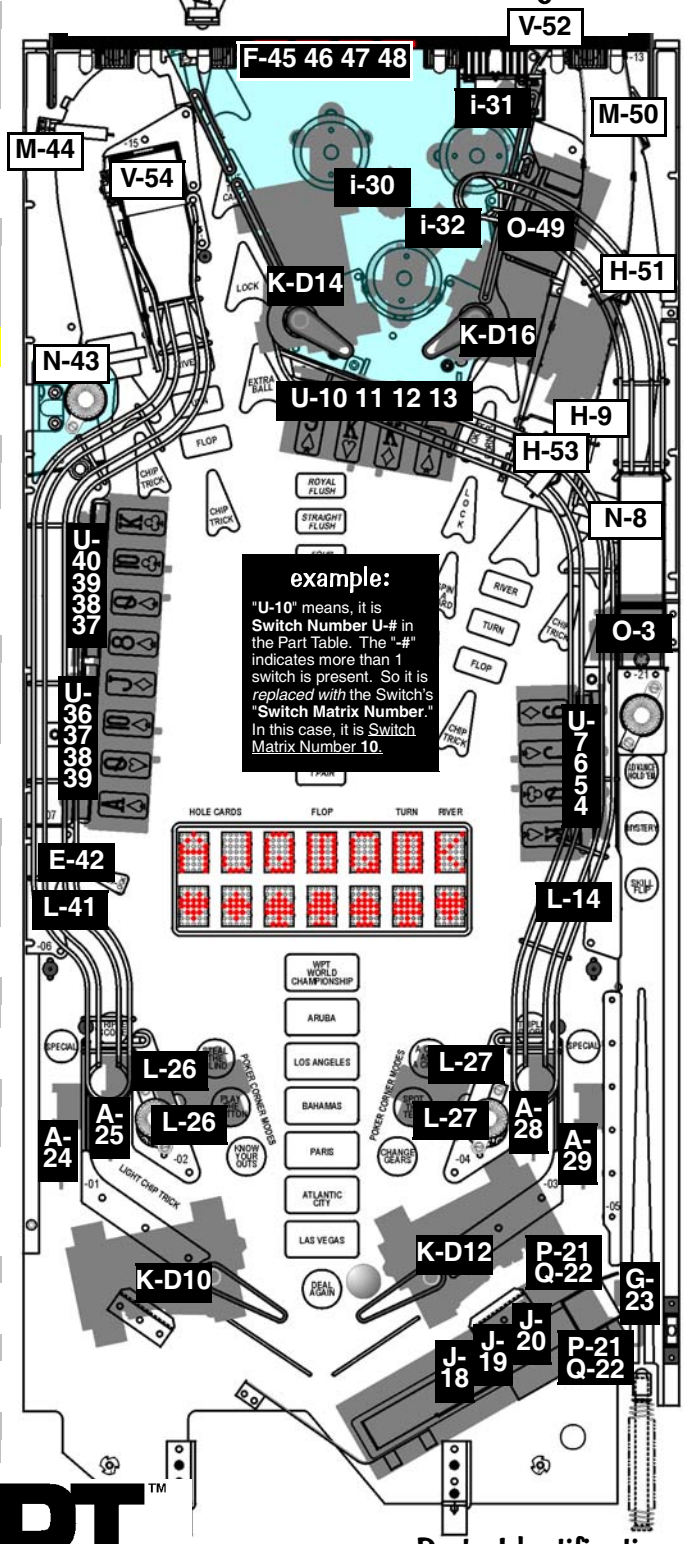

Sec. 4: Parts Id. ...

Playfield Top - Roll-Under Gates ☐ & Spinners ■

Notes Item 1:
Switch Gate Bracket (535-7756-02)
Top Inside Width - 1-3/8".
Wire Form (535-7755-01)
Inside Top Width = 1.17",
Bottom WIdth = .75"

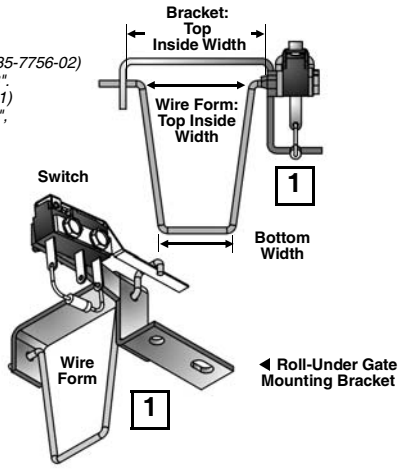

Front Underside View

Nr.	ROLL-UNDER GATE PARTS	QTY.	SPI PART Nr.
1	Roll-Under Switch Gate	2	***Ind. Parts Only***

Individual Parts Only : Switch (**180-5087-00**), Switch Gate Bracket (**535-7756-02**) **and** Wire Form on Bracket (**535-7755-01**), Switch Body Protect Plate (Qty. 1) (**535-6539-00**), Diode 1N4004 (Qty. 1/per) (**112-5003-00**) **and** #2-56 X 1/2" Unslotted Serrated HWH #4 Head TR3 Black (Qty. 2/per) (**237-5937-02**)
(ASM. REF. 515-6556-03-88L/-88R includes wiring)
Item 2 is secured to the Flat Rail by: #6-32 X 1/4" PPH (Qty. 2) (232-5200-00)

*See view of Item 1 with Flat Rail in Section **4**, Chapter **2**, (**Blue Pages**): Misc. Rails, Brackets, Switches & Gates.*

*Switch Matrix Numbers **44** (Left) & **50** (Right)*

2	1-Way Ball Gate Bracket (Upper Left Orbit)	1	515-7491-00

For Individual Items use : 1-Way Ball Gate Mounting Bracket (**535-9672-00**) **and** Wire Form (**535-9674-00**)
Use the 515-7491-00 Number to get the Wire Form mounted, crimped and/or fitted.

Nr.	SPINNER PARTS	QTY.	SPI PART Nr.
3	Spinner & Switch	2	***Ind. Parts Only***

Individual Parts Only : Switch (1-1/4" Actuator) (**180-5010-04**), Spinner Mounting Bracket Modified (**535-5128-00**), Spinner Target Sub-Assembly (**515-5553-00**), Switch Body Protect Plate (Qty. 1) (**535-6539-00**), Diode 1N4004 (Qty. 1) (**112-5003-00**), #2-56 X 1/2" PPH MS ZI 90272A081 (Qty. 2) (**237-5806-00**) **and** Decals *(reference only)* (**Kit: 802-5000-88**) ***Note:*** *Individual Decals (830-6370-SP1 & -SP2) are not available individually, ordering of kit is required. For view of all pieces, see **Playfield - Plastics (Screened & Clear) Kit, Decals & Mylar Kits**, next page.*
(ASM. REF. ONLY 500-5656-00-88L/-88R)
Item 4 is secured to the Flat Rail by: #6 X 1/2" SHWH AB (Red) (Qty. 1) (234-5001-02)

*Switch Matrix Numbers **43** (Left) & **8** (Right)*

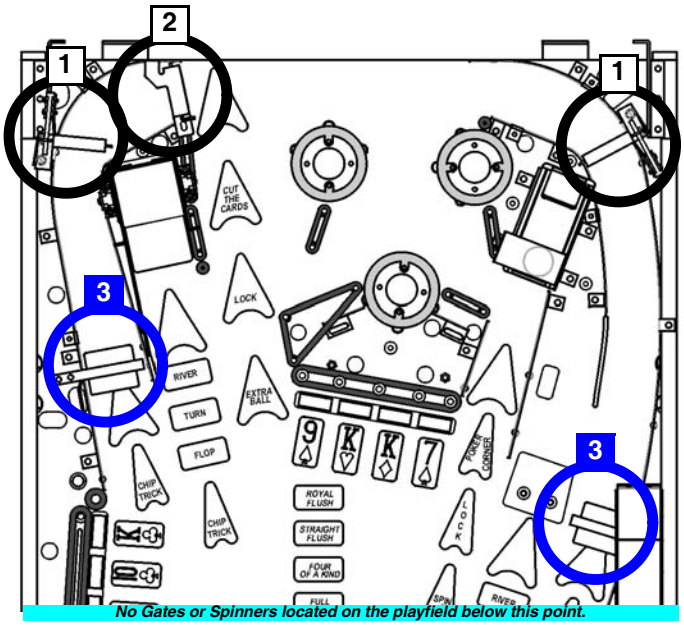

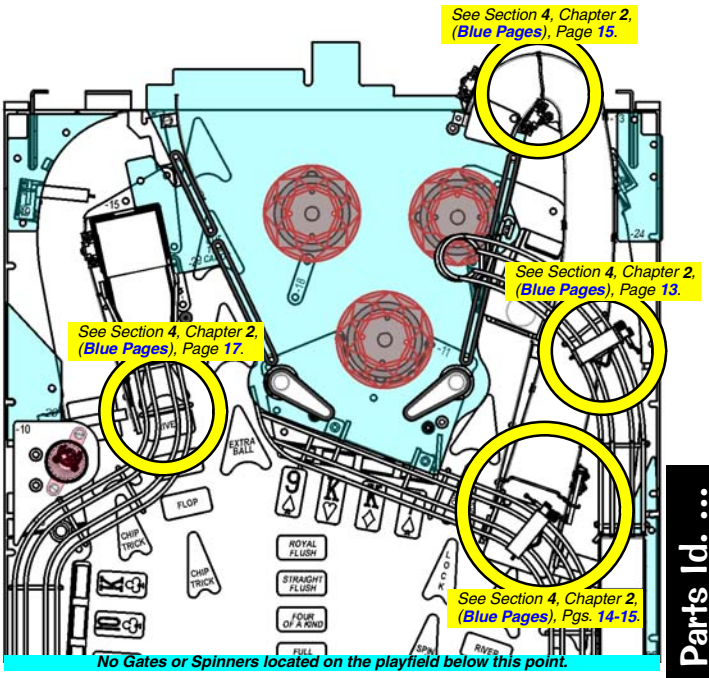

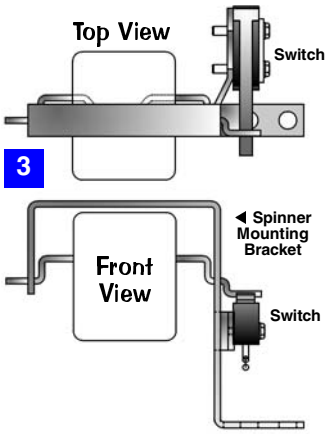

More Parts & Views Note

*For Wire Forms and/or Switches on Wire and Steel Ramps, see Section **4**, Chapter **2**, (**Blue Pages**): Shooter Tube & Shooter Wire Ramp, Upper Playfield & Right Wire Ramp, Right Steel Ramp, Reverse-O-Matic Ramp & Left Wire Ramp.*

Take Note:

Legend Note:
Items noted with a white square ☐ are Roll-Under Gates, which includes gravity 1-way gates *(without coil assist or switches)*, gates with switches and/or 2-way gates *(open/close coil assisted)*.
Items noted with a blue square ■ are Spinner Gate(s).

Playfield Top - Flat Rails ☐, Wood Rails ■, Ball Guides ■ & Wire Forms ■

Nr.	FLAT RAILS	QTY.	SPI PART Nr.
FR1	Flat Rail (Left Orbit, Left Side)	1	535-9576-00
	Item FR1 is secured by: #8 X 1/2" SHWH AB (Zinc) (Qty. 4) (234-5101-00) **and** #6-32 X 1/2" PTH A (Zinc) (Qty. 1) (237-5809-00) *into Wood Rail.*		
FR2	Flat Rail (Left Orbit, Right Side)	1	535-9575-00
	Item FR2 is secured by: #8 X 1/2" SHWH AB (Zinc) (Qty. 1) (234-5101-00), #8-32 Nylon Stop Nut (Qty. 2) (240-5102-00) **and** #8 Washer (Qty. 2) (242-5005-00)		
	Attached to Item FR2 is : Bumper Bracket (**535-9647-00**) and Ruber Bumper **Blue** (626-5066-00) **and is secured by:** Rivet, 1/8" ø X 1/4" (Qty. 2) (**249-5003-00**)		
	Note: *For a 3D view of Item **FR2**, see Section **4**, Chapter **2**, Drawings for Major Assemblies & Ramps (**Blue Pages**), Misc. Rails, Brackets, Switches & Gates.*		
FR3	(Flat Rail) Bracket, Bumper Guide Long Hole	1	535-9797-00
FR4	(Flat Rail) Bracket, Bumper Guide Short Hole	1	535-9798-00
	Items FR3 & FR4 are secured by: #8 X 1/2" SHWH AB (Zinc) (Qty. 2/per) (234-5101-00)		
FR5	Flat Rail (Eject Popper, Left Side)	1	535-9572-00
	Item FR5 is secured by: #8 X 1/2" SHWH AB (Zinc) (Qty. 1) (234-5101-00), #6 X 1-1/2" PPH (Zinc) (Qty. 1) (232-5007-00) **and** Plastic Post (Clear) (Qty. 1) (55-5059-01)		
FR6	Flat Rail (Right Ramp, Left Side)	1	535-9570-00
	Item FR6 is secured by: #8 X 1/2" SHWH AB (Zinc) (Qty. 1) (234-5101-00), #8-32 Nylon Stop Nut (Qty. 1) (240-5102-00) **and** #8 Washer (Qty. 1) (242-5005-00)		
FR7	Flat Rail (Eject Popper, Right Side)	1	535-9567-00
	Item FR7 is secured by: #8 X 1/2" SHWH AB (Zinc) (Qty. 2) (234-5101-00)		
FR8	Flat Rail (Right Ramp, Right Side)	1	535-9658-00
	Item FR8 is secured by: #8 X 1/2" SHWH AB (Zinc) (Qty. 1) (234-5101-00), #8-32 Nylon Stop Nut (Qty. 2) (240-5102-00) **and** #8 Washer (Qty. 2) (242-5005-00)		
FR9	Flat Rail (Right Orbit, Left Side)	1	535-9573-00
	Item FR7 is secured by: #8 X 1/2" SHWH AB (Zinc) (Qty. 2) (234-5101-00), #6-32 X 7/8" Fin Shank Screw (Zinc) (Qty. 1) (237-5921-04) **and** Hex Spacer, 1-1/8" X 1/4" #6-32 Tap (Qty. 1) (254-5008-17)		
FR10	Flat Rail (Right Orbit, Right Side)	1	535-9574-00
	Item FR10 is secured by: #8 X 1/2" SHWH AB (Zinc) (Qty. 3) (234-5101-00), #8-32 Nylon Stop Nut (Qty. 3) (240-5102-00), #8 Washer (Qty. 3) (242-5005-00) **and** #6-32 X 1/2" PTH A (Zinc) (237-5809-00) *into Wood Rail.*		
FR11	Flat Rail (Shooter Lane, Left Side)	1	535-9568-00
	Item FR8 is secured by: #8-32 Nylon Stop Nut (Qty. 2) (240-5102-00) **and** #8 Washer (Qty. 2) (242-5005-00)		
FR12	Flat Rail (Behind Middle 4-Bank)	1	535-9799-00
	Item FR12 (located under Plastic -11) is secured by: #6-32 X 2" PPH MS (Zinc) (Qty. 1/per hole) (237-5513-00), Washer 13/64" I.D. X 5/8" O.D. X .105" Thick (Qty. 1/per side) (242-5039-00) *(between playfield and clear post)*, #6-32 T-Nut (Qty. 1/per side) (240-5002-00) **and** 1-1/16" 1-Groove Plastic Post (Clear) (Qty. 1/per side) (550-5059-01)		
	Early Production: Item FR12 is secured to Plastic -11 by: #8-32 Nylon Stop Nut (Qty. 2) (240-5102-00)		
FR13	Flat Rail (Bottom Arch Drain)	1	535-8393-00
	Item FR14 is secured by: #8 X 1/2" SHWH AB (Zinc) (Qty. 4) (234-5101-00)		
FR14	Flat Rail (Upper Playfield, Left Side)	1	535-9666-00
	Item FR14 is secured by: #8-32 X 5/8" SHWH Sw. Ser. (Zinc) (Qty. 1) (237-5975-03) **and** #8-32 Nylon Stop Nut (Qty. 1) (240-5102-00)		
	Note: *For a 3D view of Item **FR14** (loc. on the Upper Playfield), see Section **4**, Chapter **2**, Drawings for Major Assemblies & Ramps (**Blue Pages**), Upper Playfield & Right Wire Ramp.*		

Nr.	WOOD RAILS	QTY.	SPI PART Nr.
WR1	Wood Rail, 33.75"(Left Side)	1	525-5007-11
WR2	Wood Rail, 23" (Lower Right Side)	1	525-5007-01
WR3	Wood Rail, 14" Notched (Upr. Right Side)	1	525-5007-01
	Items WR1-WR3 are secured by: #6 X 1-1/4" PFH A (Zinc) (WR1-WR2 Qty. 4/per // WR3 Qty. 3) (237-5804-00)		

Nr.	BALL GUIDES	QTY.	SPI PART Nr.
BG1	Ball Guide, 3.75" X .12" ø	1	535-5356-03
BG2	Ball Guide, 3.5" X .12" ø	2	535-5356-16
BG3	Ball Guide, 2.75" X .12" ø	1	535-5356-15
BG4	Ball Guide, Plastic (Long, Clear)	2	550-5037-01
	Item BG4 is secured by: #6-32 X 2" PPH MS (Zinc) (Qty. 4/per) (237-5513-00) **and** #6-32 T-Nut (Qty. 4/per) (240-5002-00)		
BG5	Ball Guide (Snubber), 3.125"	2	535-5373-01

Nr.	WIRE FORMS	QTY.	SPI PART Nr.
WF1	Wire Form (on Item BG4 Ball Guide)	1/per	535-5642-00

*For Roll-Under Switch Gate Assemblies, see the previous page. For Wire Forms with Gates on Wire & Steel Ramps, see Section **4**, Chapter **2**, Drawings for Major Assemblies & Ramps (**Blue Pages**), Shooter Tube & Shooter Wire Ramp, Upper Playfield & Right Wire Ramp, Right Steel Ramp, Reverse-O-Matic Ramp & Left Wire Ramp.*

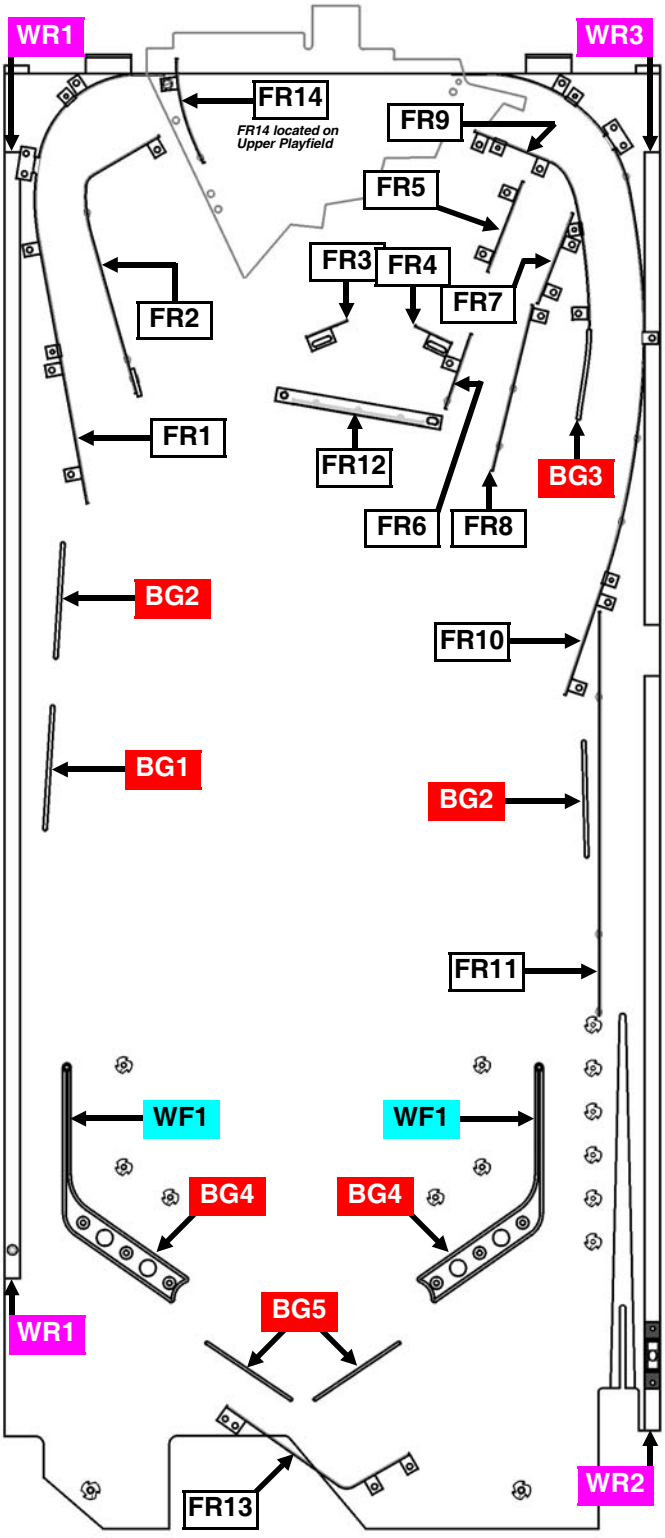

Take Note:

Legend Note:
Items noted with a white square ☐ are Flat Rails.
Items noted with a magenta square ■ are Wood Rails.
Items noted with a red square ■ are Ball Guides *(Snubber Wires)*
Items noted with a cyan square ■ are Wire Forms.

Playfield Top - Plastics (Screened & Clear) Kit, Decals & Mylar Kits ‡

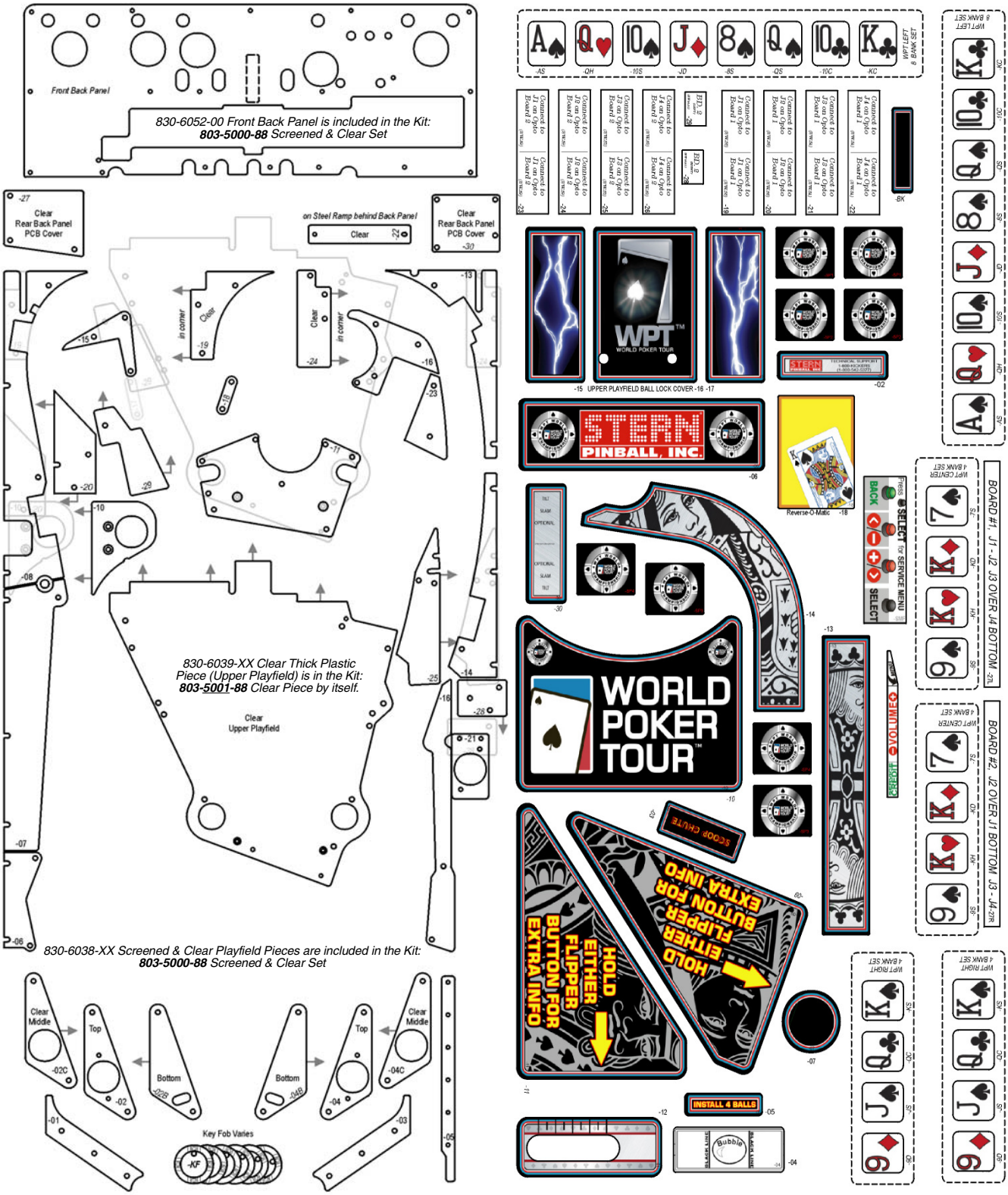

803-5000-**88** ***Kit (Plastics) includes:*** *Screened & Clear Set (830-6038-XX & 830-6052-00)*	802-5000-**88** ***Kit (Decals) includes:*** *Decal Set (820-6370-XX)*
803-5001-**88** ***Kit (Thick Plastic) includes:*** *Clear Piece (830-6039-00)*	802-5001-**88** ***Kit (Mylar) includes:*** *Full Playfield Mylar (820-5999-88)* **Not Shown**

‡ ***Attention:*** *No individual Plastic or Decal can be ordered separately, unless noted otherwise.*
Plastics & Decals are subject to change without notice during and / or after production. Shapes and / or Screening may change.
Pieces can be added or subtracted. Service Bulletin(s) will announce any critical changes, if warranted.

Playfield Top & Bottom - Metal Posts □ & Fin Shank Screws ■ (Actual Size) †

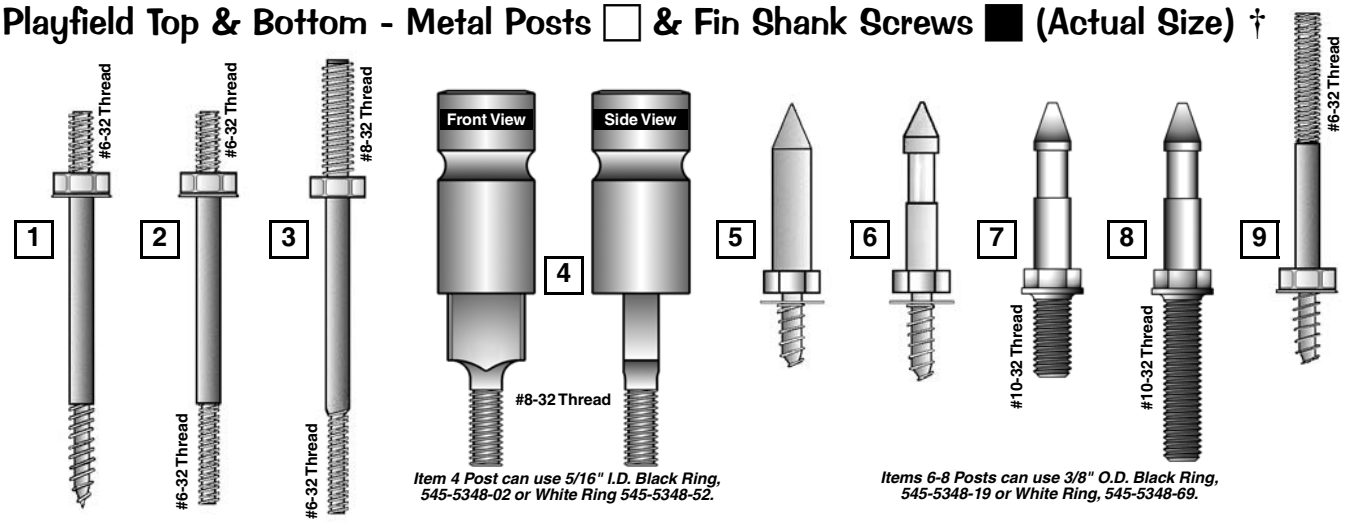

Item 4 Post can use 5/16" I.D. Black Ring, 545-5348-02 or White Ring 545-5348-52.

Items 6-8 Posts can use 3/8" O.D. Black Ring, 545-5348-19 or White Ring, 545-5348-69.

Take Note:

Legend Note:
Items noted with a white square □ are Metal Posts. Items noted with a black square ■ are Fin Shank Screws.

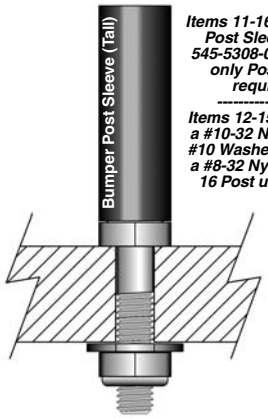

Items 11-16 Posts can use a Black Bumper Post Sleeve (Tall), 545-5308-00 (White, 545-5308-08 or Red, 545-5308-22) Usually, only Posts which are in the ball path require a Bumper Post Sleeve.

Items 12-15 Posts are typically secured by a #10-32 Nylon Stop Nut, 240-5203-00 and #10 Washer, 242-5003-00 (Item 11 Post use a #8-32 Nylon Stop Nut, 240-5102-00; Item 16 Post use a #8-32 T-Nut, 240-5101-00).

A & B ***Items A & B Note:*** *Typically used to secure Hex Spacers onto the Playfield Wood or Back Panel.*

C ***Item C Note:*** *Quantity 4 on bottom Cabinet Speaker Grill (Qty. 4) (also requires #6-32 Nylon Stop Nut, 240-5005-00).*

D ***Item D Note:*** *Quantity 3/per on the Coil Bracket Welded Assembly (515-5939-00) in the Bumper Bottom Assembly (515-6459-04).*

A - D ***Items A-D Note:*** *The "Fins" keep the screw from turning inside the wood hole.*

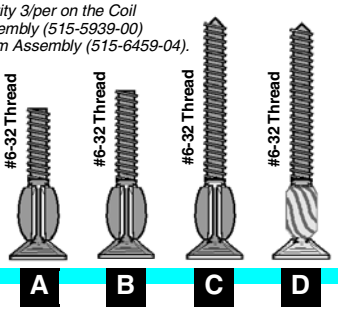

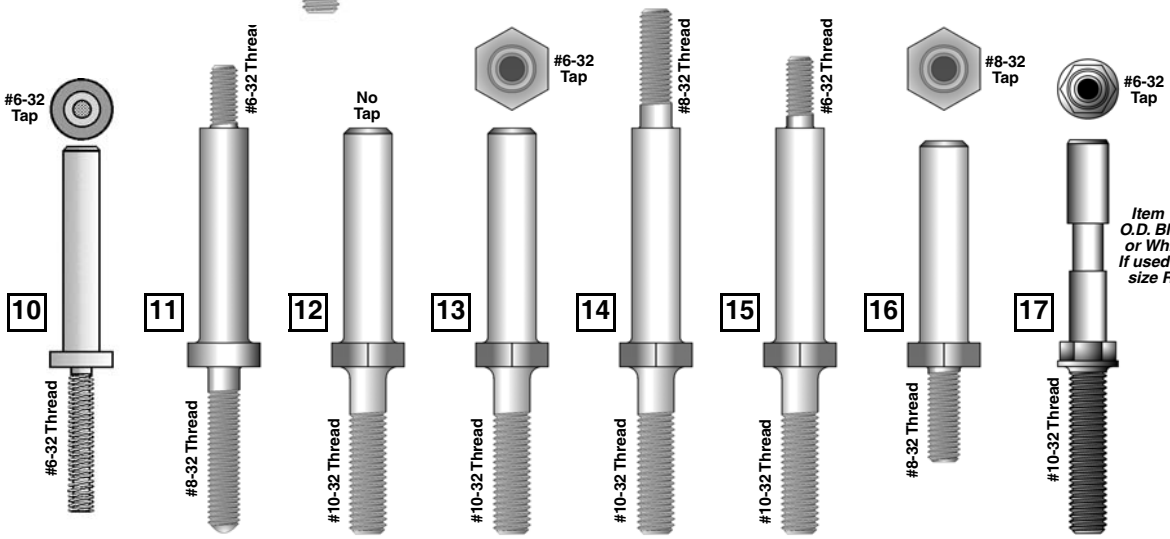

Item 17 Post can use 3/8" O.D. Black Ring, 545-5348-19 or White Ring, 545-5348-69. If used in pairs, can hold any size Rubber Ring in place.

Nr.	METAL POSTS	QTY.	SPI PART Nr.
1	Post [Fasten] #6-32 Thread // Wood Scr.	14	530-5010-02
2	Post [Fasten] #6-32 Thread // #6-32 Thread	4	530-5012-02
3	Post [Fasten] #8-32 Thread // #6-32 Thread		530-5008-00
4	Post Brass [Adjustable, Sliding] #8-32 Thread		530-5621-00
5	Mini-Post Wood Screw (no cut-away)	3	530-5004-01
6	Mini-Post Wood Screw		530-5004-00
7	Mini-Post MS // #10-32 .4" Thread	10	530-5005-01
8	Mini-Post MS // #10-32 .875" Thread	9	530-5005-00
9	Post [Fasten] #6-32 Thread // Wood Screw		530-5263-01
10	Post #6-32 Tap // #6-32 Thread		530-5127-00
11	Post [Fasten] #6-32 Thread // #8-32 Thread		530-5007-00

Nr.	METAL POSTS	QTY.	SPI PART Nr.
12	Post [Hex Base] NO TAP // 10-32 Thread		530-5332-00
13	Post [Hex Bs.] #6-32 TAP // #10-32 Thread		530-5332-01
14	Post [Hex Bs.] #8-32 Thread // #10-32 Thread		530-5332-02
15	Post [Hex Bs.] #6-32 Thread // #10-32 Thread		530-5332-03
16	Post [Hex Bs.] #8-32 TAP // #8-32 Thread	1	530-5332-04
17	Post [Hex Bs.+Groove] #6-32 TAP // #10-32 Thr.	15	530-5679-00

Nr.	FIN SHANK SCREWS	QTY.	SPI PART Nr.
A	#6-32 X 3/4" Fin Shank Screw		237-5921-02
B	#6-32 X 7/8" Fin Shank Screw	6	237-5921-04
C	#6-32 X 1¼" Fin Shank Screw	4	237-5883-00
D	#6-32 X 1 3/16" Spiral Fin Shank Screw	8	237-5957-00

† *The item type (size / description), the quantity and/or location used, are subject to change without notice. Service Bulletins will announce any changes, if warranted.*

Playfield Top & Bottom - Metal Posts □ & Fin Shank Screws ■ Continued

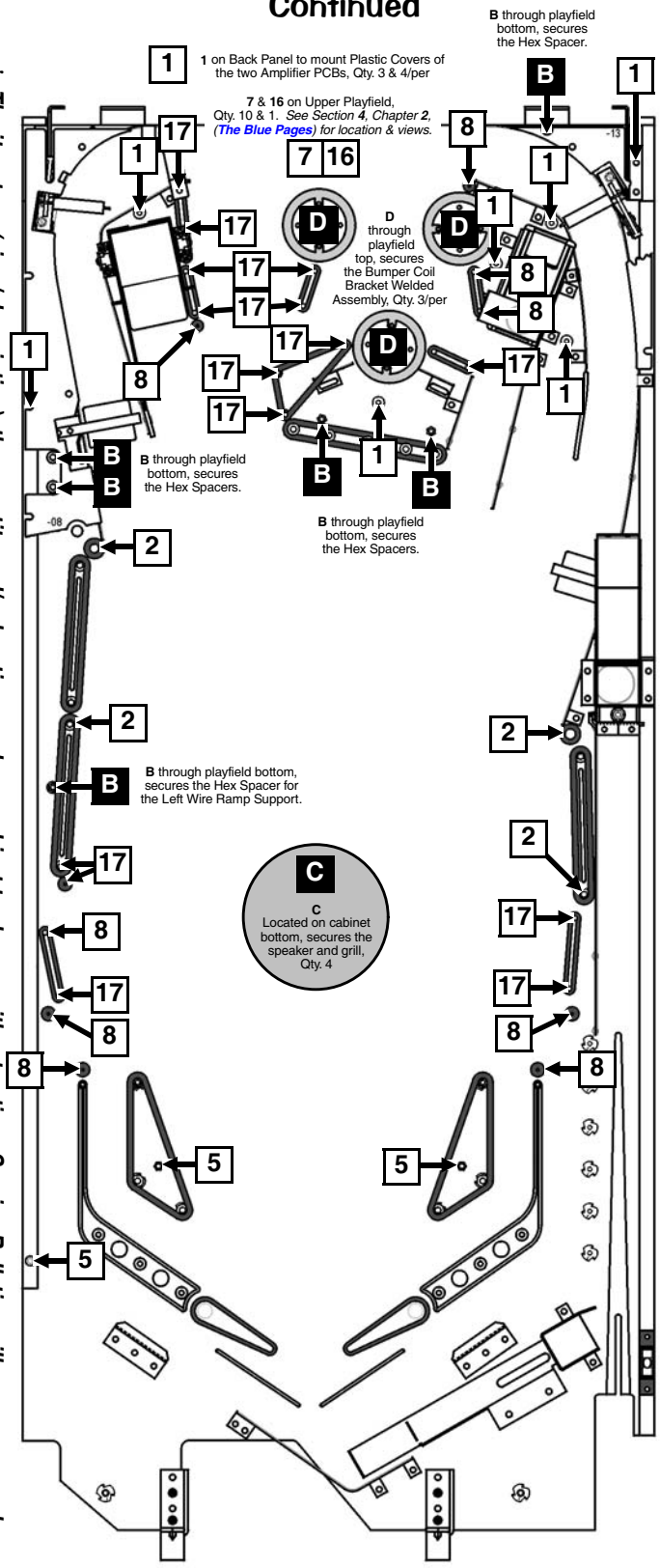

Take Note:

Legend Note:
Items noted with a white square □ are Metal Posts.
Items noted with a black square ■ are Fin Shank Screws.

Playfield Top & Bottom - Nylon Stop, KEPS, Hex, T-, Flange, Pal & Wing Nuts* (Actual Size) †

Nr.	NYLON STOP NUTS*	QTY.	SPI PART Nr.
N1	#6-32 Nylon Stop Nut	60	240-5005-00
N2	#6-32 N.S. Nut *(with ¼" Hex Body)*		240-5010-00
N3	#8-32 Nylon Stop Nut	46	240-5102-00
N4	#10-32 Nylon Stop Nut	36	240-5203-00
N5	#10-24 Nylon Stop Nut	2	240-5206-00
	*Item **N5** used with #10-24 X 1-3/4" Carriage Bolt Square Neck Black (231-5022-00) located in the Cabinet for the Roto Lock (Male) (355-5006-01).*		
N6	#4-40 Nylon Stop Nut		240-5303-00
N7	#4-40 *(18/8 Stainless)* Nylon Stop Nut		240-5303-01
N8	5/16"-18 Nylon Stop Nut		240-5316-00

Nr.	KEPS NUTS*	QTY.	SPI PART Nr.
K1	#6-32 Keps Nut *(with Star Washer)*	19	240-5008-00
K2	#6-32 Keps Nut *(with ¼" Hex Body)*		240-5011-00
K3	#8-32 Keps Nut		240-5104-00
K4	#10-32 Keps Nut	1	240-5208-00
K5	#10-24 Keps Nut	14	240-5207-00
K6	#4-40 Keps Nut		240-5318-00

Nr.	HEX NUTS*	QTY.	SPI PART Nr.
H1	#6-32 Hex Nut *(No Star Washer)*	4	240-5004-00
H2	#8-32 Hex Nut		240-5103-00
H3	#10-32 Hex Nut		240-5201-00
H4	#10-24 Hex Nut	2	240-5202-00
	*Item **H4** used with #10-24 X 1" Carriage Bolt Square Neck Black (231-5021-00) located in the Cabinet for the Side Armor Rear (towards Backbox).*		
H5	#10-32 X ⅜" Hex Nut		240-5209-00
H6	¾-16 Hex Nut		240-5315-00
H7	#2-56 Hex Nut	4	240-5301-00
H8	⅞"-14 Hex Nut		240-5317-00

Nr.	T-NUTS*	QTY.	SPI PART Nr.
T1	#6-32 T-Nut	30	240-5002-00
T2	#6-32 T-Nut *(with Side Cut Off)*		240-5002-01
T3	#8-32 T-Nut	23	240-5101-00
T4	#10-32 *(Black Oxide)* T-Nut		240-5007-00
T5	#10-32 T-Nut *(with Side Cut Off)*		240-5205-00
T6	#10-32 X 5/16" T-Nut		240-5204-00
T7	#10-24 T-Nut		240-5200-00

Nr.	FLANGE NUT*	QTY.	SPI PART Nr.
F1	¼" X 20 Flange Nut		240-5300-00
	*Item **F1** used with 1/4-20 X 1-1/4 Sq. Neck Carriage Bolt Black (231-5003-00) located in the Cabinet for the SIde Armor (Front) and Pivot Hinges.*		

Nr.	PAL NUTS*	QTY.	SPI PART Nr.
P1	Plastic Pal Nut *(on Flipper Buttons)*	10	240-5003-00
P2	Metal Pal Nut *(on Flipper Buttons)*	2	240-5003-01

Nr.	WING NUTS*	QTY.	SPI PART Nr.
W1	#6-32 Wing Nut		240-5001-00
W2	#8-32 Wing Nut		240-5100-00
W3	#10-24 Wing Nut		240-5211-00
W4	¼"-20 Wing Nut		240-5302-00
W5	¼"-20 Toggle Wing		240-5324-00

* ***Not Shown:*** *Items N2-N8, K2-K6, H2-H8, T2-T7, P1-P2 & W1-W5*

† *The item type (size / description), the quantity and/or location used, are subject to change without notice. Service Bulletins will announce any changes, if warranted.*

Playfield Top - Hex Spacers ☐ (Actual Size) †

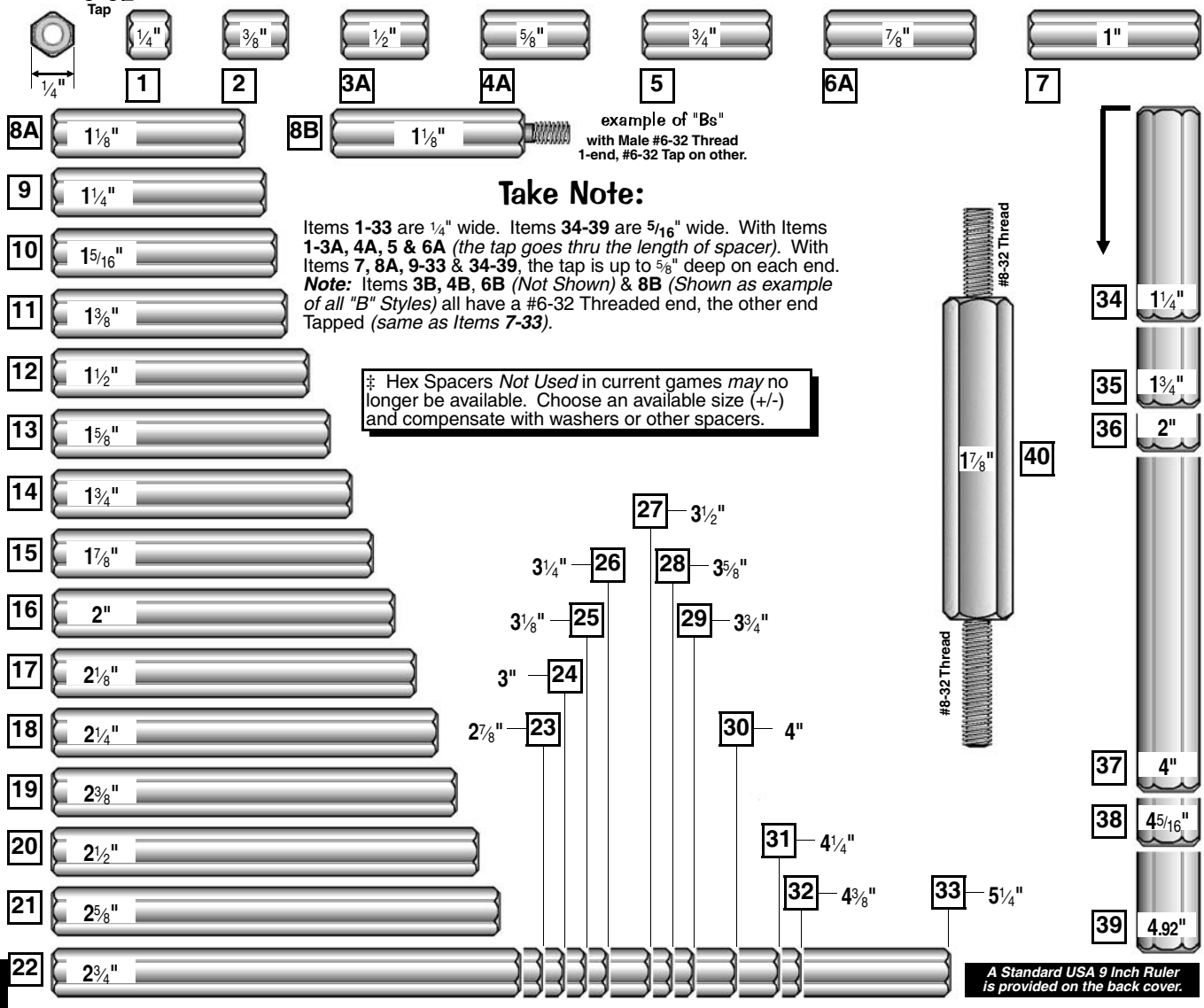

Take Note:

Items **1-33** are 1/4" wide. Items **34-39** are **5/16**" wide. With Items **1-3A, 4A, 5 & 6A** *(the tap goes thru the length of spacer).* With Items **7, 8A, 9-33** & **34-39**, the tap is up to 5/8" deep on each end. ***Note:*** Items **3B, 4B**, **6B** *(Not Shown)* & **8B** *(Shown as example of all "B" Styles)* all have a #6-32 Threaded end, the other end Tapped *(same as Items **7-33**).*

‡ Hex Spacers *Not Used* in current games *may* no longer be available. Choose an available size (+/-) and compensate with washers or other spacers.

A Standard USA 9 Inch Ruler is provided on the back cover.

Nr.	HEX SPACERS		QTY.	SPI PART Nr.
1	1/4"	X 1/4" : #6-32 Tap *(both ends)*		254-5008-00
2	3/8"	X 1/4" : #6-32 Tap *(both ends)*		254-5008-12
3A	1/2"	X 1/4" : #6-32 Tap *(both ends)*	4	254-5008-03
3B*	Identical to **3A** *with #6-32 Thread end*			254-5024-03
4A	5/8"	X 1/4" : #6-32 Tap *(both ends)*	1	254-5008-02
4B*	Identical to **4A** *with #6-32 Thread end*			254-5024-02
5	3/4"	X 1/4" : #6-32 Tap *(both ends)*	10	254-5008-04
6A	7/8"	X 1/4" : #6-32 Tap *(both ends)*		254-5008-05
6B*	Identical to **6A** *with #6-32 Thread end*			254-5024-05
7	1"	X 1/4" : #6-32 Tap *(both ends)*		254-5008-06
8A	1 1/8"	X 1/4" : #6-32 Tap *(both ends)*		254-5008-17
8B	Identical to **8A** *with #6-32 Thread end*			254-5024-17
9	1 1/4"	X 1/4" : #6-32 Tap *(both ends)*	3	254-5008-11
10	1 5/16"	X 1/4" : #6-32 Tap *(both ends)*	2	254-5008-34
11 ‡	1 3/8"	X 1/4" : #6-32 Tap *(both ends)*		254-5008-33
12	1 1/2"	X 1/4" : #6-32 Tap *(both ends)*	1	254-5008-09
13 ‡	1 5/8"	X 1/4" : #6-32 Tap *(both ends)*		254-5008-13
14	1 3/4"	X 1/4" : #6-32 Tap *(both ends)*		254-5008-10
15 ‡	1 7/8"	X 1/4" : #6-32 Tap *(both ends)*		254-5008-20
16	2"	X 1/4" : #6-32 Tap *(both ends)*		254-5008-07
17	2 1/8"	X 1/4" : #6-32 Tap *(both ends)*		254-5008-32
18	2 1/4"	X 1/4" : #6-32 Tap *(both ends)*		254-5008-18

Nr.	HEX SPACERS		QTY.	SPI PART Nr.
19	2 3/8"	X 1/4" : #6-32 Tap *(both ends)*	2	254-5008-28
20	2 1/2"	X 1/4" : #6-32 Tap *(both ends)*		254-5008-16
21	2 5/8"	X 1/4" : #6-32 Tap *(both ends)*		254-5008-08
22	2 3/4"	X 1/4" : #6-32 Tap *(both ends)*	3	254-5008-15
23	2 7/8"	X 1/4" : #6-32 Tap *(both ends)*		254-5008-31
24	3"	X 1/4" : #6-32 Tap *(both ends)*		254-5008-14
25	3 1/8"	X 1/4" : #6-32 Tap *(both ends)*		254-5008-19
26	3 1/4"	X 1/4" : #6-32 Tap *(both ends)*		254-5008-26
27	3 1/2"	X 1/4" : #6-32 Tap *(both ends)*		254-5008-27
28	3 5/8"	X 1/4" : #6-32 Tap *(both ends)*		254-5008-25
29	3 3/4"	X 1/4" : #6-32 Tap *(both ends)*		254-5008-36
30	4"	X 1/4" : #6-32 Tap *(both ends)*		254-5008-21
31	4 1/4"	X 1/4" : #6-32 Tap *(both ends)*		254-5008-30
32	4 3/8"	X 1/4" : #6-32 Tap *(both ends)*		254-5008-29
33	5 1/4"	X 1/4" : #6-32 Tap *(both ends)*		254-5008-35
34	1 1/4"	X 5/16" : #6-32 Tap *(both ends)*		254-5018-09
35	1 3/4"	X 5/16" : #6-32 Tap *(both ends)*		254-5018-06
36	2"	X 5/16" : #6-32 Tap *(both ends)*		254-5018-07
37	4"	X 5/16" : #6-32 Tap *(both ends)*		254-5018-03
38	4 5/16"	X 5/16" : #6-32 Tap *(both ends)*		254-5018-00
39	4.92"	X 5/16" : #6-32 Tap *(both ends)*		254-5018-04
40	1 7/8"	X 3/8" : #8-32 *Thread (both ends)*		***530***-5285-00

† *The item type (size / description), the quantity and/or location used, are subject to change without notice. Service Bulletins will announce any changes, if warranted.*

Playfield Top - Hex Spacers ☐ Continued

3A
5

3A & **5** secures the Display Cover on the Dot Display, Qty. 4 & 2 *(see Backbox - Parts).*

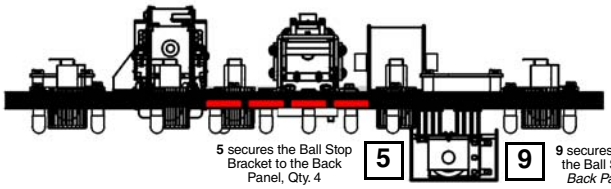

5 secures the Ball Stop Bracket to the Back Panel, Qty. 4

9 secures the Cover to the Ball Stop *(on the Back Panel)*, Qty. 2

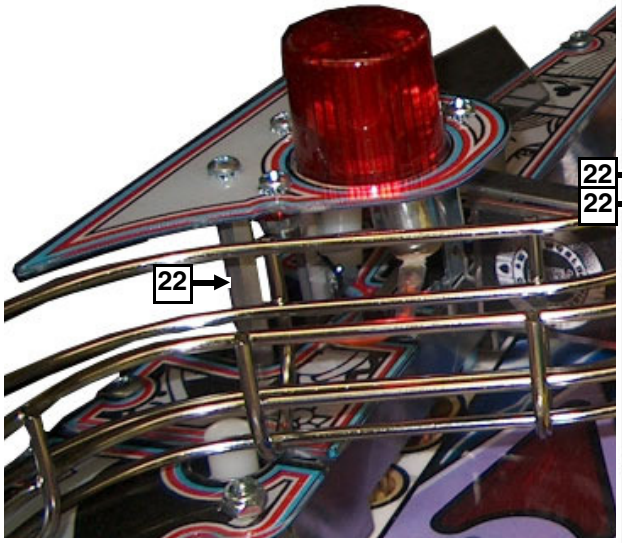

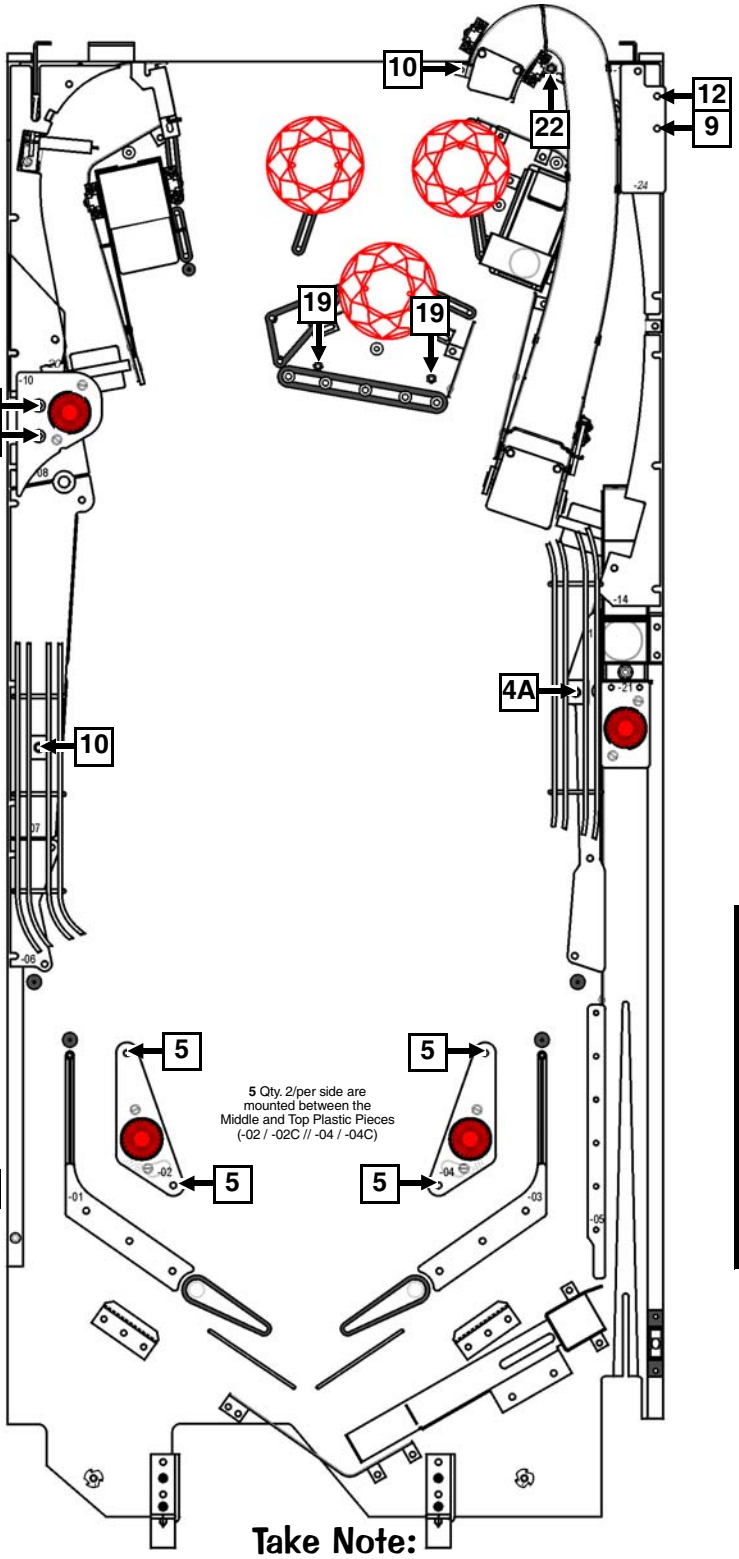

The Left & Right Slingshot Plastics are mirrored identical.

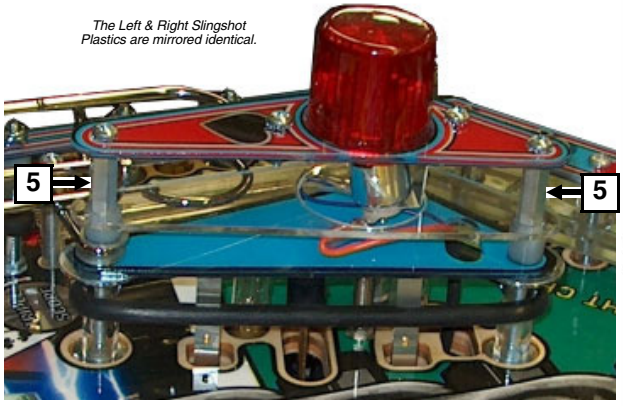

5 Qty. 2/per side are mounted between the Middle and Top Plastic Pieces (-02 / -02C // -04 / -04C)

Take Note:

Legend Note:
Items noted with a white square ☐ are Hex Spacers.

† *The item type (size / description), the quantity and/or location used, are subject to change without notice. Service Bulletins will announce any changes, if warranted.*

Sec. 4: Parts Id. ...

Playfield Top - Plastic Posts & Spacers ☐ & Metal Spacers ■ (Actual Size) †

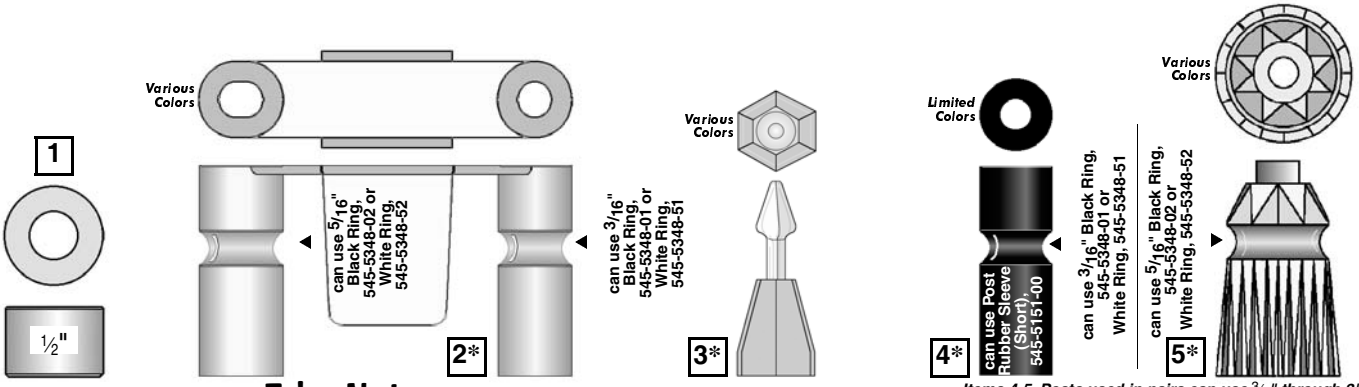

Items 4-5 Posts used in pairs can use ¾" through 3" Rubber Rings, see Rubber Parts for Part Numbers.

Take Note:

PLASTIC PART COLOR CHART

Nr.	Color	Nr.	Color	Nr.	Color
-00	Black	-06	Yellow	-12	Fluor. Blue
-01	Clear	-07	Orange	-13	Teal Green
-02	Red	-08	White	-14	Gray
-03	Amber	-09	Purple	-15	Luminescent
-04	Green	-10	Fluor. Orange	-16	Gold
-05	Blue	-11	Fluor. Green		

* Items **2 - 5** come in various colors *(may not be available in every color)*. Item **4** is currently only available in the color(s) stated in this game manual *(other colors used in prior games may no longer be available)*. The "**-XX**" or last 2-Digits in Part Nºs which come in various colors, should be replaced with the desired 2-Digit Nº from the above Color Chart. Some colors may no longer be available for desired item.

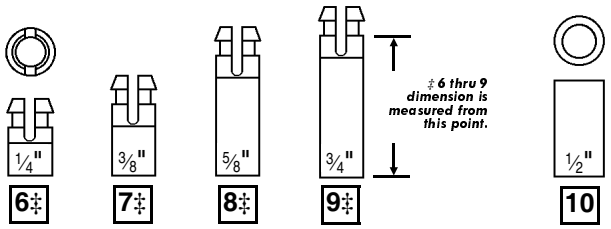

‡ Items **6** through **9** *dimensions are measured from bottom to just under the cut-away.* Item **30** *dimension* is measured from *top-to-top* of curve. *See pictorials with Items **9** & **30**.*

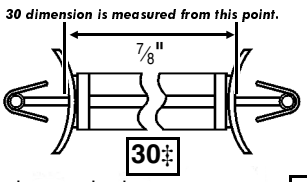

Take Note:

If any one of Items **11-23** Plastic Spacers is not available in the size required, order the smaller sized spacers required to stack sizes together until appropriate size is achieved *(e.g. If 1⅛" is needed but unavailable, order a ½" + ⅝" & stack to = 1⅛").*

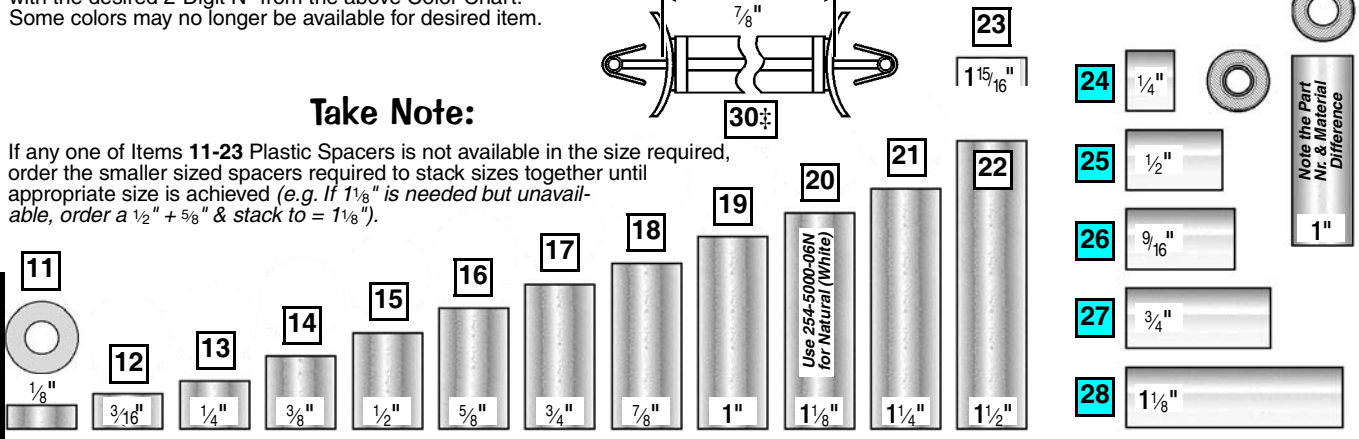

Nr.	PLASTIC POSTS & SPACERS	QTY.	SPI PART Nr.
1	⅜" X ½" Metal Spacer		530-5099-00
2**	Top Lane Plastic Mini-Lite Hood (Clr)		550-5061-XX
	Item 2 typically secured by: #6-32 X 1-3/4" PPH MS (Zinc) (Qty. 2/per) (237-5511-00) **and** Washer 9/64" X 5/16" OD X 1/32" (Qty. 2/per) (242-5017-00), if used.		
3**	Mini-Jewel Plastic Post (Clear)	7	550-5052-01
	Item 3 typically secured by: #6 X 3/8" HWH AB (Zinc) (Qty. 1/per) (234-5000-00)		
4**	1 1/16" 1-Groove Plastic Post (Black)		550-5059-00
	1 1/16" 1-Groove Plastic Post (Clear)	31	550-5059-01
5**	1-Groove Jewel Plastic Post (Clear)	3	550-5034-01
	Items 4 & 5 typically secured by: Post Fastening Screw #6-32 Top / #6-32 Bottom (Qty. 1/per) (530-5012-02, Item 6 Page 69).		
6 ‡	¼" Slf. Rtn. Plastic Spacer White	16	254-5007-02
7 ‡	⅜" Slf. Rtn. Plastic Spacer White	8	254-5007-01
8 ‡	⅝" Slf. Rtn. Plastic Spacer White		254-5007-00
9 ‡	¾" Slf. Rtn. Plastic Spacer White		254-5007-03
10	½" X ¼" Plastic Spacer White **(Narrow)**		254-5000-03
11	⅛" X ⅜" Plastic Spacer Gray		254-5000-19
12	3/16" X ⅜" Plastic Spacer Gray	5	254-5000-18
13	¼" X ⅜" Plastic Spacer Gray	3	254-5000-02

Nr.	PLASTIC POSTS & SPACERS	QTY.	SPI PART Nr.
14	⅜" X ⅜" Plastic Spacer Gray	2	254-5000-12
15	½" X ⅜" Plastic Spacer Gray	1	254-5000-01
16	⅝" X ⅜" Plastic Spacer Gray	6	254-5000-14
17	¾" X ⅜" Plastic Spacer Gray	2	254-5000-07
18	⅞" X ⅜" Plastic Spacer Gray		254-5000-11
19	1" X ⅜" Plastic Spacer Gray *or* Black		254-5000-04
20	1⅛" X ⅜" Plastic Spacer Gray		254-5000-06
	1⅛" X ⅜" Plastic Spacer Natural	2	254-5000-06N
21	1¼" X ⅜" Plastic Spacer Gray	3	254-5000-05
22	1½" X ⅜" Plastic Spacer Gray	2	254-5000-08
23	1 15/16" X ⅜" Plastic Spacer Gray		254-5000-15
24	¼" X 5/16" X .144" I.D. Metal Spacer		254-5014-03
25	½" X 5/16" X .144" I.D. Metal Spacer		254-5014-00
26	9/16" X 5/16" X .144" I.D. Metal Spacer		254-5014-04
27	¾" X 5/16" X .144" I.D. Metal Spacer		254-5014-01
28	1⅛" X 5/16" X .144" I.D. Metal Spacer		254-5014-02
29	1" X 5/16" X .144" I.D. Metal Spacer		254-5001-00
30‡	⅞" Plastic Spacer Support **(Dual-Locking)**		254-5039-14

† *The item type (size / description), the quantity and/or location used, are subject to change without notice. Service Bulletins will announce any changes, if warranted.*

Playfield Top - Plastic Posts & Spacers ☐ & Metal Spacers ■ Continued

† *The item type (size / description), the quantity and/or location used, are subject to change without notice. Service Bulletins will announce any changes, if warranted.*

6 **6 Backbox:**
CPU/Sound PCB (Qty. 2);
I/O Power Driver PCB (Qty. 4);
(see Backbox - Parts).

6 **6 Under Playfield:**
9X Lamp Mounting Bracket (Qty. 4);
7X Lamp Mounting Bracket (Qty. 6);
(see Playfield Bottom - Miscellaneous Parts and Brackets).

12 **12 Under Playfield:**
Set-Up Mini-Driver PCB (Qty. 1);
14X LED Dot Display PCB (Qty. 4)

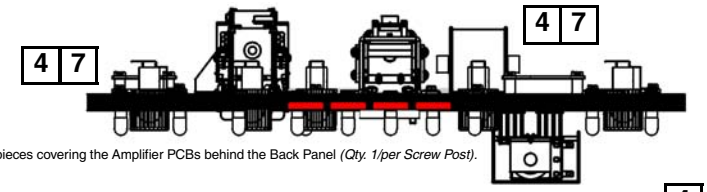

4 & **7** supports plastic pieces covering the Amplifier PCBs behind the Back Panel *(Qty. 1/per Screw Post).*

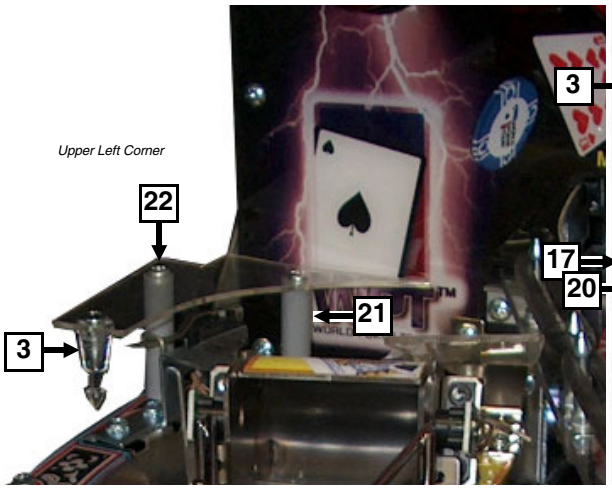

Upper Left Corner

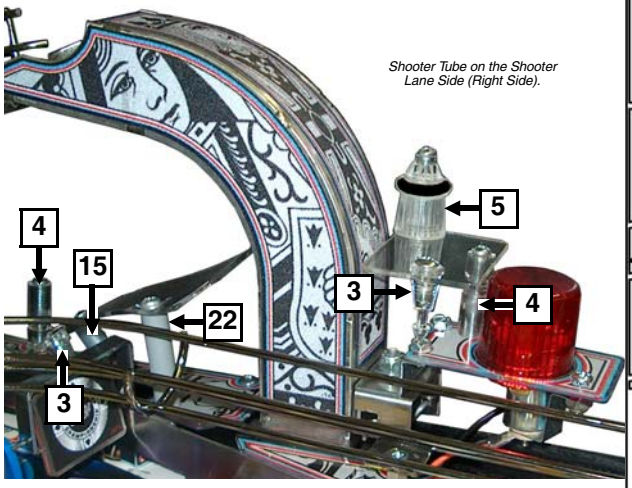

Shooter Tube on the Shooter Lane Side (Right Side).

The Left & Right Slingshot Plastics are mirrored identical.

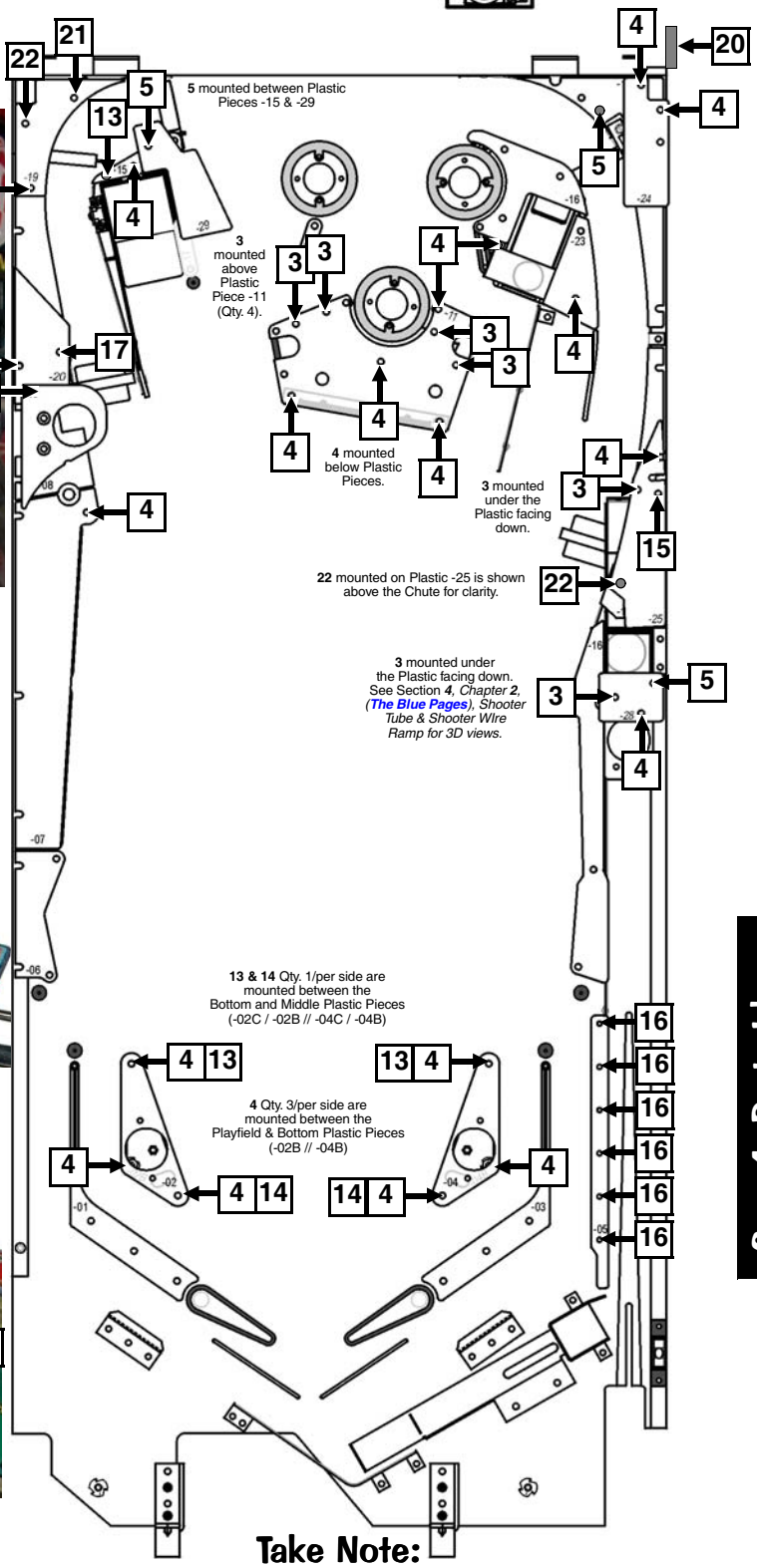

Legend Note:
Items noted with a white square ☐ are Plastic Posts & Spacers.

Sec. 4: Parts Id. ...

P/F Top & Bot. - Rubber Parts Black ■, White □ & Blue ■, (Rings Actual Size) †

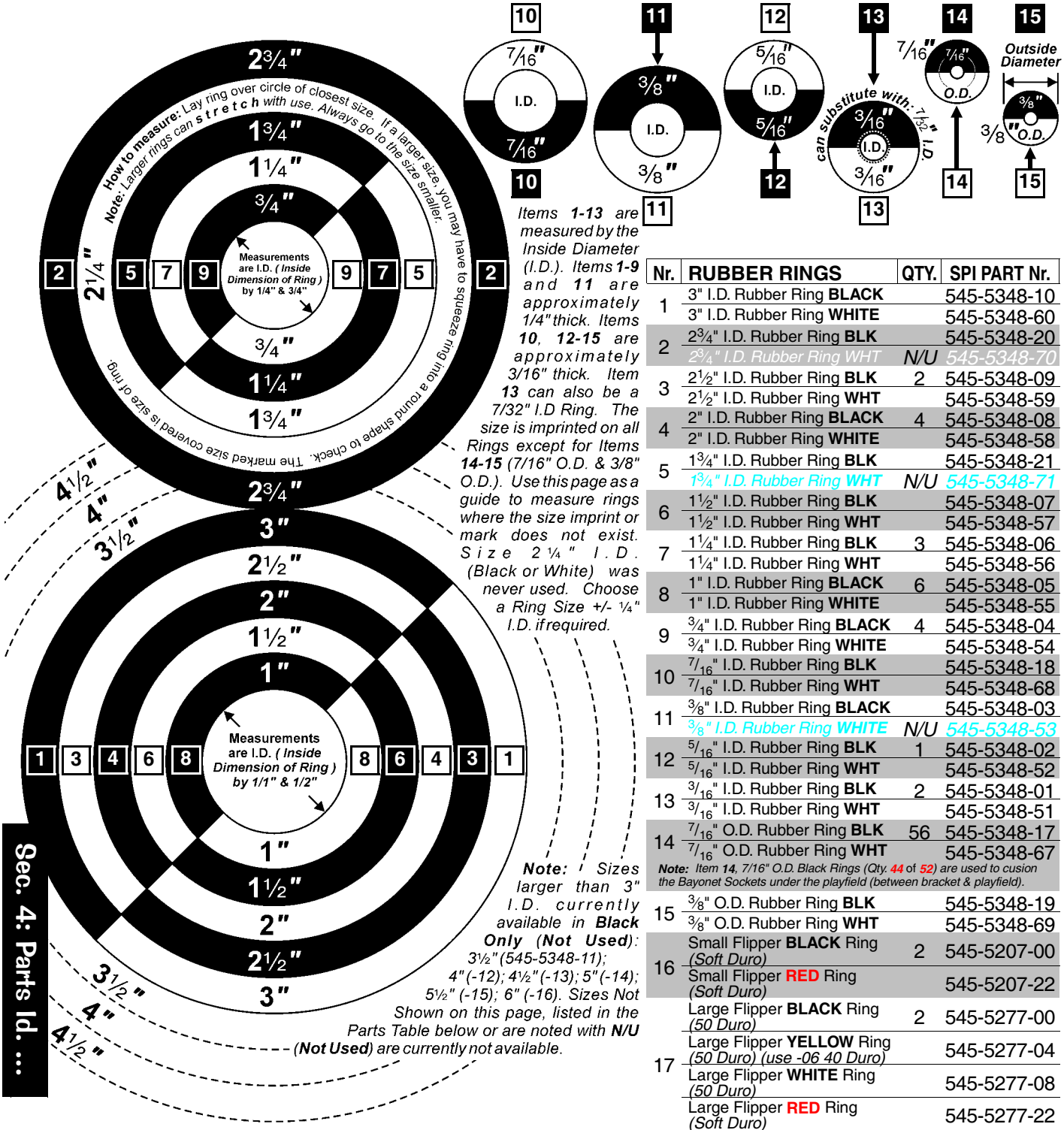

*Items **1-13** are measured by the Inside Diameter (I.D.). Items **1-9** and **11** are approximately 1/4" thick. Items **10**, **12-15** are approximately 3/16" thick. Item **13** can also be a 7/32" I.D Ring. The size is imprinted on all Rings except for Items **14-15** (7/16" O.D. & 3/8" O.D.). Use this page as a guide to measure rings where the size imprint or mark does not exist. Size 2 ¼" I.D. (Black or White) was never used. Choose a Ring Size +/- ¼" I.D. if required.*

***Note:** Sizes larger than 3" I.D. currently available in **Black Only (Not Used)**: 3½"(545-5348-11); 4"(-12); 4½"(-13); 5"(-14); 5½" (-15); 6" (-16). Sizes Not Shown on this page, listed in the Parts Table below or are noted with **N/U** (**Not Used**) are currently not available.*

Nr.	RUBBER RINGS	QTY.	SPI PART Nr.
1	3" I.D. Rubber Ring **BLACK**		545-5348-10
	3" I.D. Rubber Ring **WHITE**		545-5348-60
2	2¾" I.D. Rubber Ring **BLK**		545-5348-20
	2¾" I.D. Rubber Ring WHT	*N/U*	*545-5348-70*
3	2½" I.D. Rubber Ring **BLK**	2	545-5348-09
	2½" I.D. Rubber Ring **WHT**		545-5348-59
4	2" I.D. Rubber Ring **BLACK**	4	545-5348-08
	2" I.D. Rubber Ring **WHITE**		545-5348-58
5	1¾" I.D. Rubber Ring **BLK**		545-5348-21
	*1¾" I.D. Rubber Ring **WHT***	*N/U*	*545-5348-71*
6	1½" I.D. Rubber Ring **BLK**		545-5348-07
	1½" I.D. Rubber Ring **WHT**		545-5348-57
7	1¼" I.D. Rubber Ring **BLK**	3	545-5348-06
	1¼" I.D. Rubber Ring **WHT**		545-5348-56
8	1" I.D. Rubber Ring **BLACK**	6	545-5348-05
	1" I.D. Rubber Ring **WHITE**		545-5348-55
9	¾" I.D. Rubber Ring **BLACK**	4	545-5348-04
	¾" I.D. Rubber Ring **WHITE**		545-5348-54
10	7/16" I.D. Rubber Ring **BLK**		545-5348-18
	7/16" I.D. Rubber Ring **WHT**		545-5348-68
11	3/8" I.D. Rubber Ring **BLACK**		545-5348-03
	*3/8" I.D. Rubber Ring **WHITE***	*N/U*	*545-5348-53*
12	5/16" I.D. Rubber Ring **BLK**	1	545-5348-02
	5/16" I.D. Rubber Ring **WHT**		545-5348-52
13	3/16" I.D. Rubber Ring **BLK**	2	545-5348-01
	3/16" I.D. Rubber Ring **WHT**		545-5348-51
14	7/16" O.D. Rubber Ring **BLK**	56	545-5348-17
	7/16" O.D. Rubber Ring **WHT**		545-5348-67
	***Note:** Item **14**, 7/16" O.D. Black Rings (Qty. **44** of **52**) are used to cusion the Bayonet Sockets under the playfield (between bracket & playfield).*		
15	3/8" O.D. Rubber Ring **BLK**		545-5348-19
	3/8" O.D. Rubber Ring **WHT**		545-5348-69
16	Small Flipper **BLACK** Ring *(Soft Duro)*	2	545-5207-00
	Small Flipper **RED** Ring *(Soft Duro)*		545-5207-22
17	Large Flipper **BLACK** Ring *(50 Duro)*	2	545-5277-00
	Large Flipper **YELLOW** Ring *(50 Duro) (use -06 40 Duro)*		545-5277-04
	Large Flipper **WHITE** Ring *(50 Duro)*		545-5277-08
	Large Flipper **RED** Ring *(Soft Duro)*		545-5277-22
18	O-Ring 11/32" I.D. X 7/32" O.D. X 1/16"		545-5850-00
	(Located inside Cabinet with each Flipper Button Assembly)		

Nr.	RUBBER BUMPER PADS	QTY.	SPI PART Nr.
A*	Bumper **BLK** Pad (Lg. w/ grommet)	7	545-5428-00
	*Item **B** are located on Flipper Assemblies. See next page for location.*		
B*	Bumper **BLK** Pad (Sm. w/ grommet)	5	545-5105-00
	*Item **B** are located on multiple assemblies. See next page for location.*		
C*	Bumper **BLUE** Pad *(on Flat Rail)*	1	626-5066-00
D*	Bumper **BLUE** Pad *(on Rt. Ramp)*	2	626-5067-00

Nr.	RBR. BUMPER POST SLVS.	QTY.	SPI PART Nr.
E*	Bumper **BLACK** Post Sleeve (Tall)		545-5308-00
	Bumper **WHITE** Post Sleeve (Tall)		545-5308-08
F*	Bumper Post Sleeve (Short)		545-5151-00

Take Note:

* An asterisk (*) indicates view of item on the Assembly Drawing only *(for location see next page). For better view(s), see **Drawings for Major Assemblies...** (**The Blue Pages**), Section **4**, Chapter **2**, (Page **81**), (view Table of Contents for exact page).*

Legend Note:
Items noted with a black square ■ are Black Rubber Parts.
Items noted with a white square □ are White Rubber Parts.

*† **The item type (size / description), the quantity and/or location used, are subject to change without notice. Service Bulletins will announce any changes, if warranted.***

† *The item type (size / description), the quantity and/or location used, are subject to change without notice. Service Bulletins will announce any changes, if warranted.*

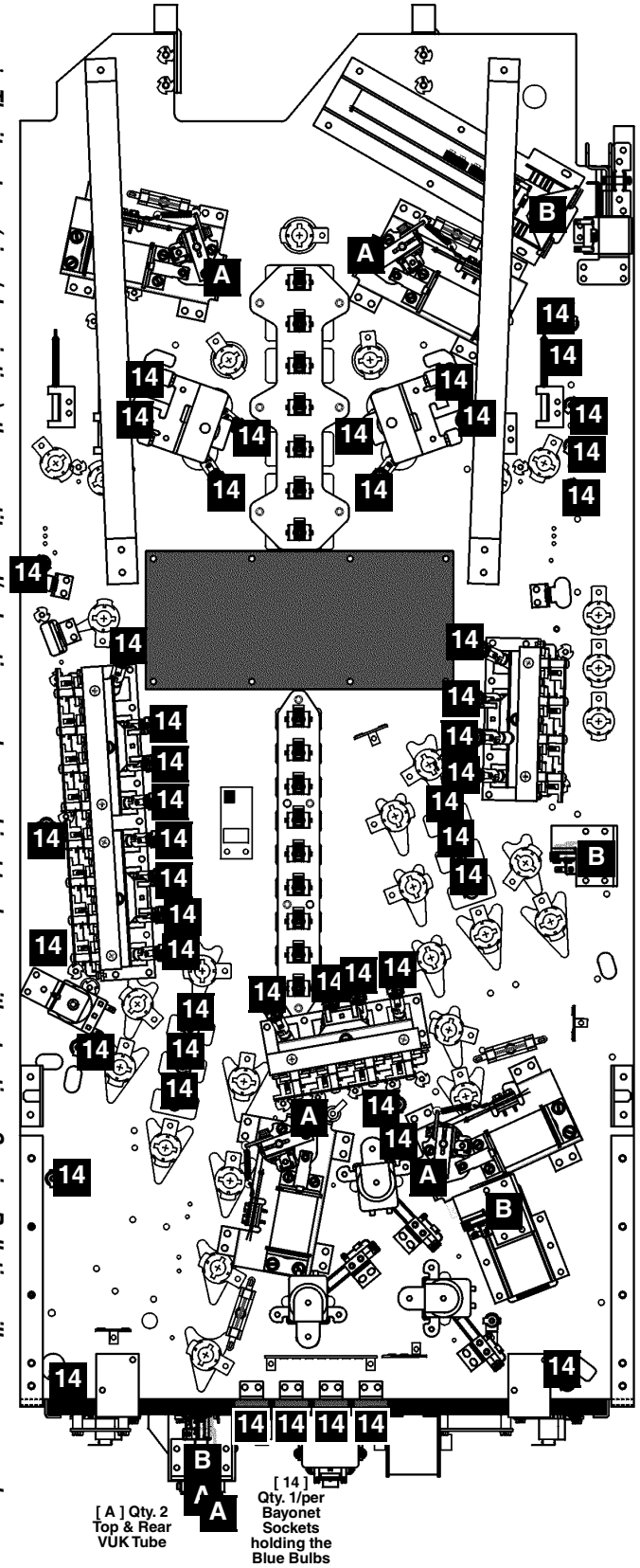

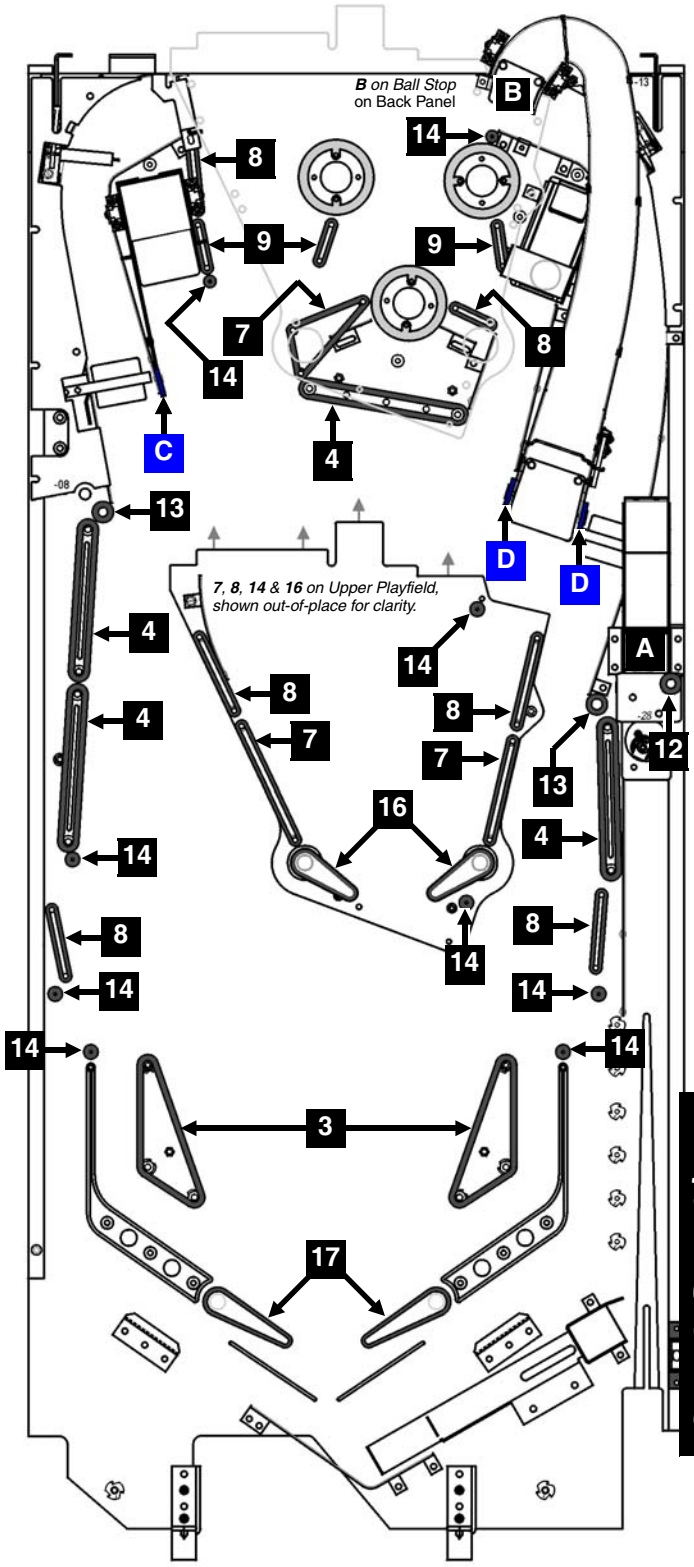

Take Note:

Legend Note:
Items noted with a black square ■ are Black Rubber Parts.
Items noted with a white square □ are White Rubber Parts.
Items noted with a blue square ■ are Blue Rubber Parts.

Playfield Top & Bottom - Small Bayonet Sockets & Bulbs ■ (Actual Size) †

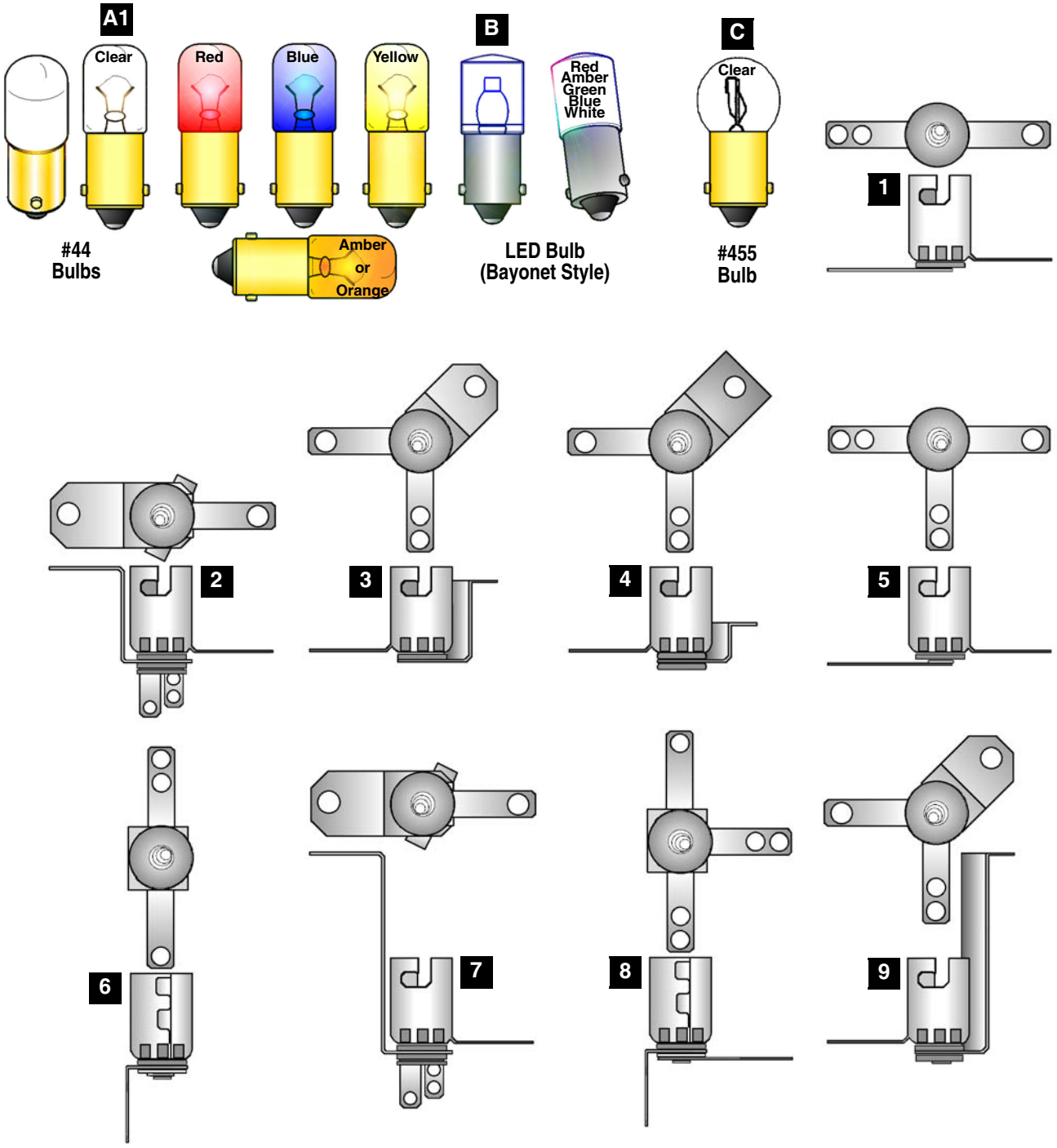

Nr.	BULBS (#44)	QTY.	SPI PART Nr.
A	#44 Bulb (Clear) *Heavy Filament*	61	165-5000-44-HF
	#44 Bulb (Blue)	4	165-5053-05-HF
Item A Note: *Different Colors available (not used in this game) ~* **Red** (165-5053-02-HF); **Amber** (165-5053-03-HF); **Blue** (165-5053-05-HF); **Orange** (165-5053-07-HF)			

Nr.	BULBS (LED & #455)	QTY.	SPI PART Nr.
B	LED Module (WHT) **(12.8v 20-25mA) Bynt.**		112-5023-08
Item B Note: *Different Colors available (not used in this game) ~* **Red** (112-5023-02); **Amber** (112-5023-03); **Green** (112-5023-04); **Blue** (112-5023-05);			
C	#455 Twinkle Bulb		165-5003-00

Nr.	SMALL BAYONET SOCKETS	QTY.	SPI PART Nr.
1	2-Lug Staple Down Socket	11	077-5000-00
2	3-Lug Stand-Up Socket (Med. Brkt.)	4	077-5008-00
3	2-Lug Stand-Up Socket (Med. Brkt.)		077-5002-00
4	2-Lug Stand-Up Sckt. (Short Bracket)	12	077-5002-31
5	3-Lug Staple Down Socket		077-5001-00
6	2-Lug Laydown Socket		077-5003-00
7	3-Lug Stand-Up Socket (Tall Bracket)	6	077-5009-00

Nr.	SMALL BAYONET SOCKETS	QTY.	SPI PART Nr.
8	3-Lug Laydown Socket (3 Lugs Flat)		077-5006-00
9	2-Lug Stand-Up Socket (Tall Bracket)		077-5005-00
10	3-Lug Stand-Up Long Shell Socket		077-5013-00
11	2-Lug Stand-Up Lg. Shell Socket (GIs)	8	077-5031-00
12	1-Lug S-U Lg. Shell Sckt. (Med. Brkt.)		077-5012-00
13	3-Lug S-U Lg. Shell Sckt. (45° Brkt.)	20	077-5035-00
14	3-Lug Laydown Socket (2 Lugs Bent)		077-5032-00

† *The item type (size / description), the quantity and/or location used, are subject to change without notice. Service Bulletins will announce any changes, if warranted.*

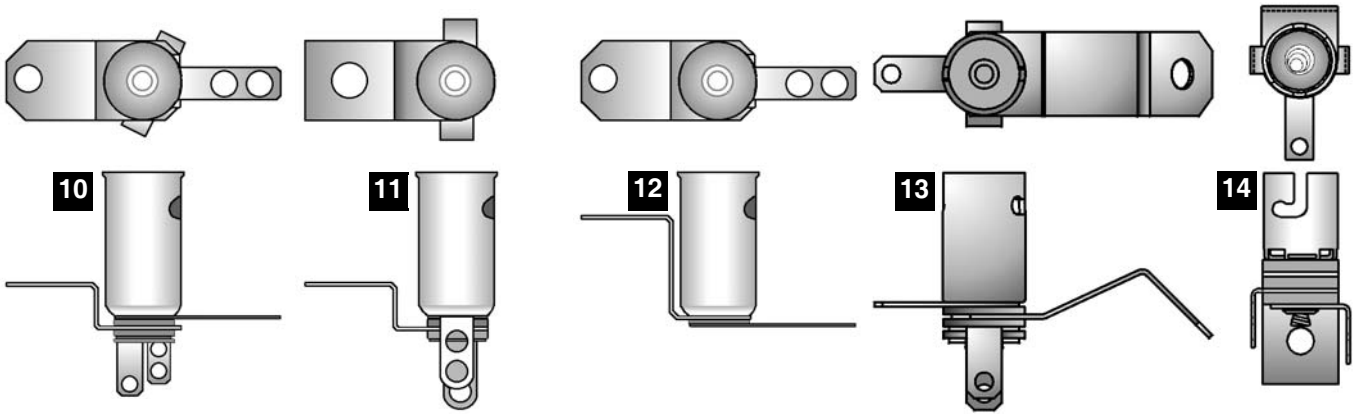

Playfield Bottom - Large Bayonet Sockets & Bulbs ■ (Actual Size) †

#89 Bulb

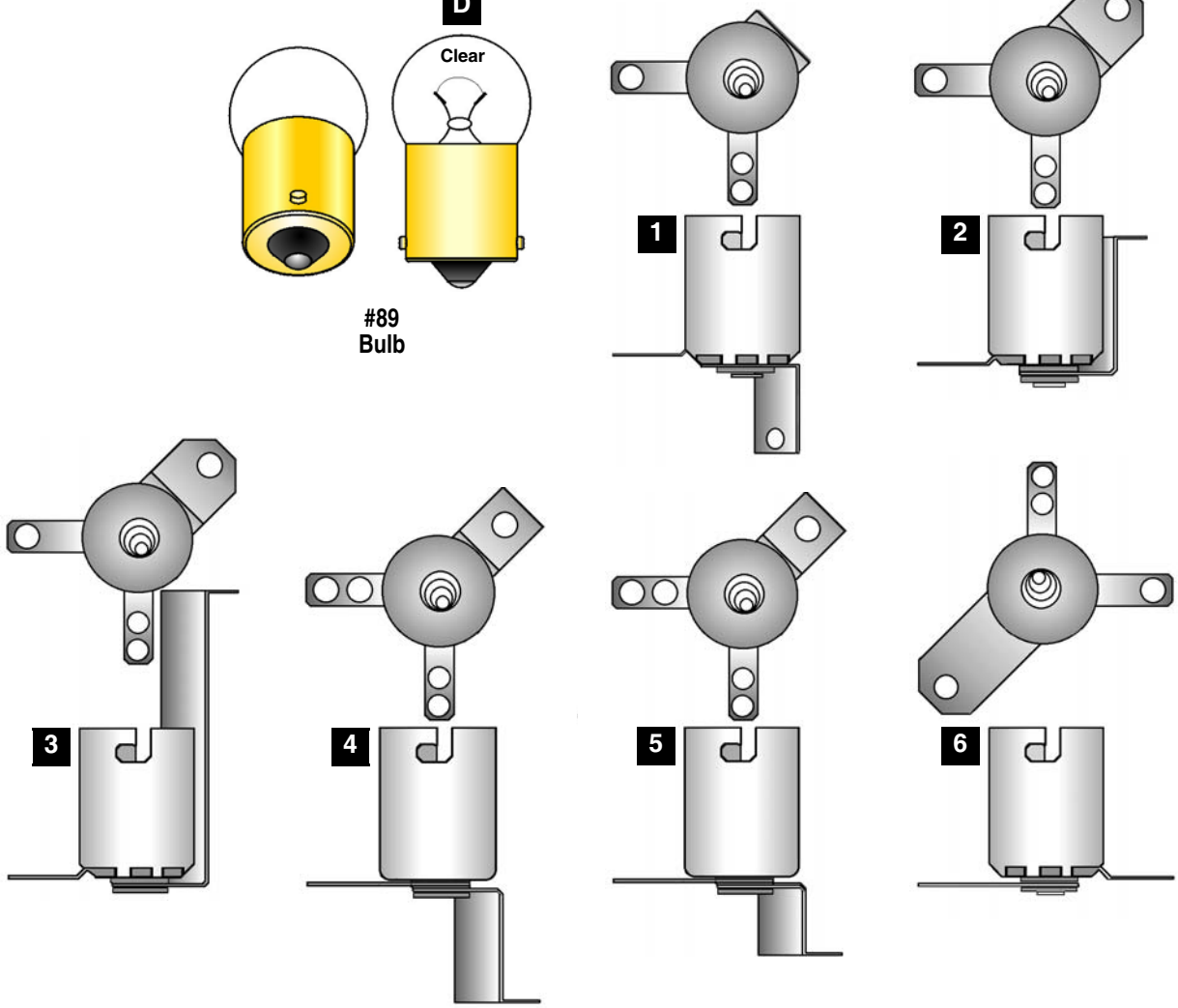

Nr.	BULBS (#89)	QTY.	SPI PART Nr.
D	#89 Bulb *Heavy Filament*	10	165-5000-89-HF

Nr.	LARGE BAYONET SOCKETS	QTY.	SPI PART Nr.	Nr.	LARGE BAYONET SOCKETS	QTY.	SPI PART Nr.
1	2-Lug Laydown Standard Socket		077-5100-00	4	2-Lug Stand-Up Rev. Mount Socket		077-5103-00
2	2-Lug Stand-Up Short Socket	9	077-5101-00	5	2-Lug Stand-Up Rv. Mnt. Short Socket		077-5106-00
3	2-Lug Stand-Up Long Socket		077-5102-00	6	2-Lug Straight Leg Socket		077-5107-00

† *The item type (size / description), the quantity and/or location used, are subject to change without notice. Service Bulletins will announce any changes, if warranted.*

Playfield Top & Bottom - Wedge Base Sockets & Bulbs ■ (Actual Size) †

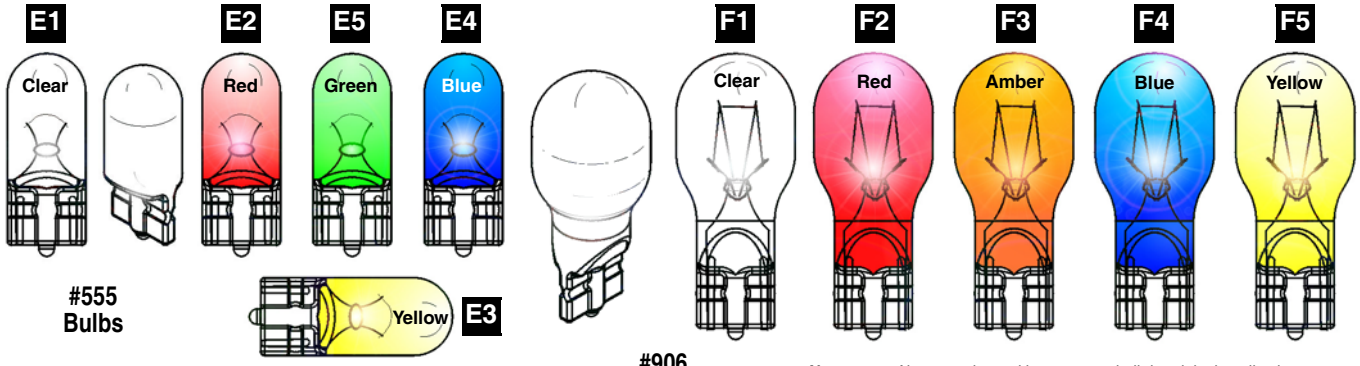

Note: *Always replace with same type bulb in original application.*

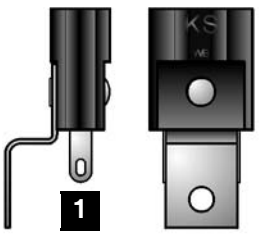

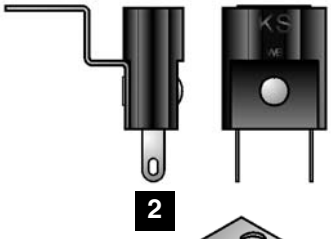

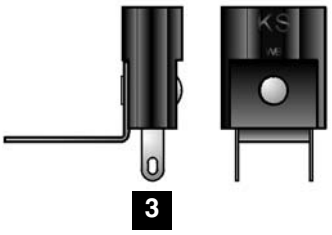

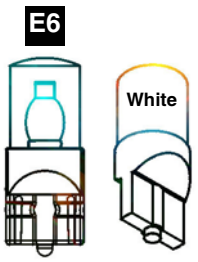

LED Bulb (Wedge Base)

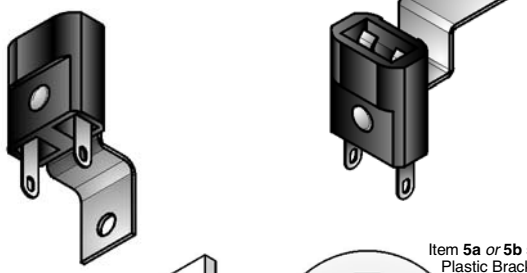

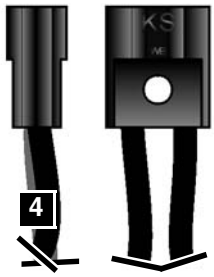

*Item **4** Socket does not require brackets. Old stock may include "L" style brackets (each side); do not secure to assembly.* ***Black Wires (Qty. 2) are 12" each.***

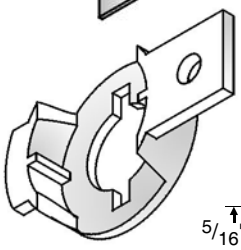

Item **5a** *or* **5b** sockets are secured to the playfield or assembly by Item **5c** Plastic Bracket or *may* also be snapped into specially cut **Clear and / or Screened Plastic Pieces** *or* **Metal Brackets** *(used for multiple mounting of sockets when positioned closely together or in tight areas). If Plastic Pieces or Metal Brackets are used to mount Item **5a** or **5b** Sockets, it will be noted on **Playfield Bottom - Miscellaneous Parts and Brackets**, page earlier in this Chapter.*

Item **5a** is a solderless **IDC** *(Insulation Displacement Connection)* Socket with a built-in Diode, 1N4003 (112-5003-00) *(can be replaced with 1N4001 Diode, 112-5001-00).* Item **5b** Socket (Yellow) is identical to **5a** (Socket) *except* it does ***NOT REQUIRE*** a diode *(Flash Lamp usage).*

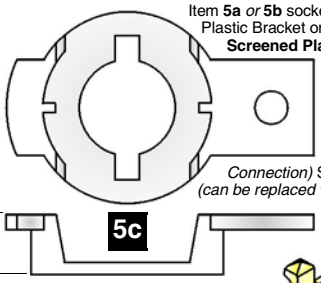

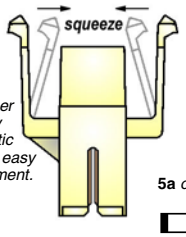

Just squeeze the "side arms" of the socket together and pull away from the plastic or bracket for easy Bulb replacement.

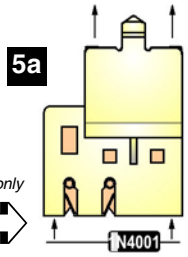

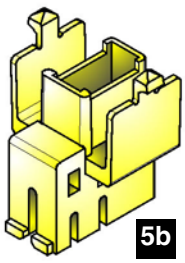

5b *is Yellow with* ***No Diode***

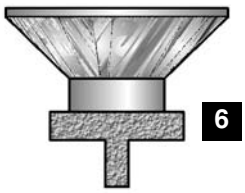

Nr.	BULBS (#555 & LED)	QTY.	SPI PART Nr.
E1	#555 Wedge Base Bulb (Clear)	44	165-5002-00
E2-E5	#555 Wedge Base Bulb (Multi-Color)		165-5054-XX
	Item E2-E5 Bulb Note: *Different Colors available (not used in this game) ~* **Red (165-5054-02); Green (165-5054-04); Blue (165-5054-05); Yellow (165-5054-06);**		
E6	LED Module (WHT) **(5v - 6.3v) Wedge Base**	3	112-5024-08
	Item E6 Bulb Note : *Typically used with Item 4 Socket in Pop Bumpers.*		

Nr.	BULBS (#906)	QTY.	SPI PART Nr.
F	#906 Wedge Base Bulb (Clear)		165-5004-00
	Item F Note: *Different Colors available (not used in this game) ~* **Red (165-5004-02); Amber (165-5004-03); Blue (165-5004-05); Yellow (165-5004-06)**		

Ordering Note: *C86 / CM86 / #86 6.3 Mini-Wedge Base Bulb (Clear) used inside the Tournament Button (as described in Section **4**, Chapter **1**, (**The Pink Pages**) Parts Identification & Location, Cabinet - Parts & Switches, Item **11T**), use Part Number **165-5002-01**.*

Nr.	WEDGE BASE SOCKETS	QTY.	SPI PART Nr.
1	Wedge Base Socket (Laydown)		077-5026-01
2	Wedge Base Socket (Offset)		077-5029-00
3	Wedge Base Socket (Laydown GI)		077-5030-00
4	W.B. Socket (Bumpers/Special App.)	4	077-5206-00

Nr.	WEDGE BASE SOCKETS	QTY.	SPI PART Nr.
5a	IDC Snap-On Socket (Biege)	44	077-5216-00
5b	IDC Snap-On Socket ***No Diode*** (Yel.)		077-5216-**01**
5c	5/16" Ht. Bracket (White)	28	545-5760-18
6	Light Reflector (Silver Plastic)		545-5409-01
	Note Item 6 : *Typically used with Item 1 (but will fit on any similiar Wedge Base Socket).*		

† *The item type (size / description), the quantity and/or location used, are subject to change without notice. Service Bulletins will announce any changes, if warranted.*

Drawings for Major Assemblies & Ramps (The Blue Pages)

Table of Contents for Section 4, Chapter 2 of 2

Table of Contents for Section 4, Chapter 2 65

Ball Shooter (Plunger) Assembly, 500-6146-00-04 ..... (Top) 66
▷ Assembly View ▷ Ball Shooter Parts Table

Autoplunger Arm Weld Assembly, 500-6091-00 Autoplunger Coil Assembly, 500-6092-03-ND and Shooter Lane Switch Assembly, 500-6096-00 ..... (Bot) 66

4-Ball Trough Assembly, 500-6318-14-ND 67
▶ Associated Parts: Ball Trough Enter/Exit Scoop, 535-7329-01; Steel Balls (1-1/16" ø), 260-5000-00

Flipper (Left) Assembly, 500-6543-12-ND 68
▶ Associated Parts: WHITE Flipper Bat & Shaft Asm., 515-5133-08-06; Large Flipper BLACK Rubber Ring, 545-5277-00

Flipper (Right) Assembly, 500-6543-02-ND 69
▶ Associated Parts: WHITE Flipper Bat & Shaft Asm., 515-5133-08-06; Large Flipper BLACK Rubber Ring, 545-5277-00

Flipper (Upper Left) Assembly, 500-6543-54-NDR 70
▶ Associated Parts: WHITE Mini-Flipper Bat & 6" Shaft Asm., 515-7265-08; Small Flipper BLACK Rubber Ring, 545-5207-00; WHITE Bushing Spacer, 530-5633-00; CLEAR Tube Spacer, 530-5364-01

Flipper (Upper Right) Assembly, 500-6543-44-NDR 71
▶ Associated Parts: WHITE Mini-Flipper Bat & 6" Shaft Asm., 515-7265-08; Small Flipper BLACK Rubber Ring, 545-5207-00; WHITE Bushing Spacer, 530-5633-00; CLEAR Tube Spacer, 530-5364-01

Slingshot (Left & Right) Assemblies, 500-5849-00-ND 72

Bumper Top, Bumper Bottom & Bumper Switch Individual Parts Only 73
▶ Associated Part: Bumper [Pop] Cap (Red), 550-5057-02 (Qty. 3)

Misc. Rails, Brackets, Switches & Gates 74

VUK (at Eject Popper) Assembly, 500-6867-01 75
▶ Associated Parts: Scoop Eject Weldment Bracket Asm., 515-7560-00; Kit: Decals *(includes -03)*, 802-5000-88

VUK (at Shooter Lane) Assembly, 500-6867-01 76

Shooter Tube & Shooter Wire Ramp Individual Parts Only 77

Upper Playfield & Right Wire Ramp Individual Parts Only 78

Right Steel Ramp & Right Wire Ramp Individual Parts Only 79

Ball Deflector (Left Ramp Up Post) Assembly, 500-6657-06-ND 80

Reverse-O-Matic & Left Wire Ramp Individual Parts Only 81

4-Bank Drop Target (Mid. & Right) Assemblies, 500-6946-04 (Qty. 2) ..... 82 – 83
▶ Associated Part: Kit: Decals *(includes all Drop Targets)*, 802-5000-88

4- or 8- Bank Drop Target Coil Side Disassembly Procedure ..... 82a – 83a

8-Bank Drop Target (Left) Assembly, 500-6946-08 ..... 84 – 85
▶ Associated Part: Kit: Decals *(includes all Drop Targets)*, 802-5000-88

Back Panel Individual Parts Only ..... 86 – 87

Ace-In-The-Hole Assembly (located on the Back Panel), 500-6902-00 ..... 88 – 89

VUK (Left) Assembly (located on the Back Panel), 500-6867-01 and VUK Tube Weldment Assembly (... Back Panel) Individual Parts Only ..... 90 – 91

Down Post (Ball Stop) Assembly, 500-6969-00 92
▶ Associated Parts: Cover (Gray Molded Plastic) *NO DECALS*, 545-6236-00; Kit: Decals *(incl. -15, -16 & -17)*, 802-5000-88

Transfer Trough & OPTOs Individual Parts Only 93

[Blank Page] 94

Ball Shooter (Plunger) Assembly, 500-6146-00-04 (Items 1-8)

Nr.	BALL SHOOTER PARTS	QTY.	SPI PART Nr.
1	Housing (Shooter Assembly)	1	535-5067-02
	Item 1 is secured to the Cabinet ***(not included with Item 1 or the Assembly)*** **by:** Support Plate (Qty. 1) (535-5027-00), #10-32 X 1/2" PPH (Sems) Zinc TF (Qty. 3) (237-6033-00), #10 Split Lock Washer (Qty. 3) (244-5003-00) **and** #6 X 1/2" HWH AB (Zinc) Red (Qty. 2) (234-5001-02)		
2	Rod Assembly *(with* ***Black Knob****)*	1	515-6557-00
3	Comp. Spring (GREEN, .035" ø)	1	266-5001-**04**
4	Compression Spring (Short Plunger)	1	266-5010-00
5	Bushing, 3/8" I.D. (Oilite)	2	280-5010-00
6	Washer, 3/8" I.D. X 5/8" O.D. X 1/16"	3	242-5014-00
7	Retaining Ring, 3/8" ø Shaft	1	270-5012-00
8	Plunger Tip (Black 50 Duro)	1	545-5276-00

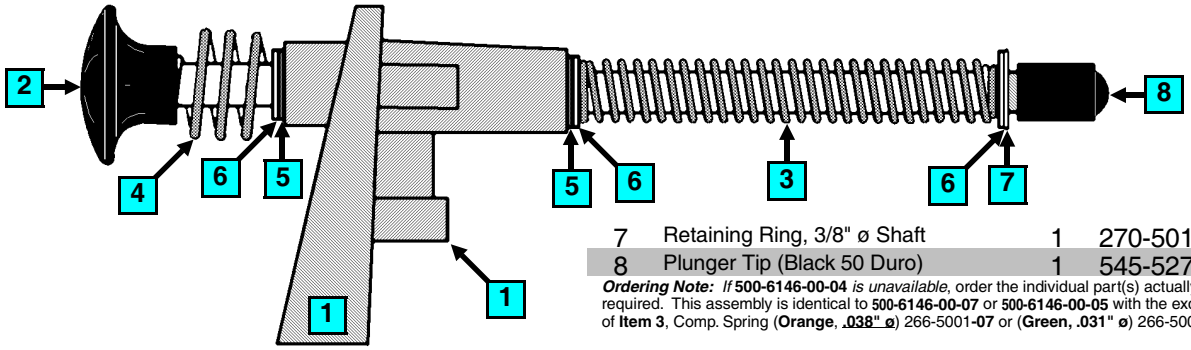

Ordering Note: *If* **500-6146-00-04** *is unavailable*, order the individual part(s) actually required. This assembly is identical to **500-6146-00-07** or **500-6146-00-05** with the exception of **Item 3**, Comp. Spring (**Orange**, **.038" ø**) 266-5001-**07** or (**Green, .031" ø**) 266-5001-**05**.

Autoplunger Arm Weld Assembly, 500-6091-00 (Items 1-5) and Autoplunger Coil Assembly, 500-6092-03-ND (Items 6-9) Shooter Lane Switch Assembly, 500-6096-00 (Items 10-12)

Nr.	AUTOPL. ARM WELD PARTS	QTY.	SPI PART Nr.
1	Arm Weld Assembly	1	515-6526-00
	Item 1 is secured to Item 2 by: Retaining Ring, 1/4" ø Shaft (Qty. 1) (270-5002-00)		
2	Autoplunger Fulcrum	1	535-7697-00
3	Nyliner, 1/4" (Thomson #4l1-FF)	2	545-5423-00
4	Plunger & Link Assembly	1	515-5338-00
	Item 4 is secured to Item 1 by: Retaining Ring, 1/4" ø Shaft (Qty. 1) (270-5002-00) ***For Individual Items use :*** Plunger 2" Lg. (**530-5025-01**), Plunger Link (**545-5293-00**) **and** Roll Pin 1/8" ø x 5/8" Lg. (**251-5008-00**)		
5	Compression (Return) Spring	1	266-5020-00
	(ASM. REF. 500-6091-00, Items 1-5)		

Nr.	AUTOPLNGR. COIL PARTS	QTY.	SPI PART Nr.
6	Autoplunger Coil Bracket Assembly	1	515-6527-00
	Items 1 & 6 are secured below the P/F by: #8 X 1/2" SHWH AB (Zc.) (Qty. 9) (234-5101-00)		
7	Coil Retainer Bracket	1	535-5203-03
	Item 7 is secured to Item 6 by: #8-32 X 1/4" PPH MS (Sems) Zinc (Qty. 2) (232-5300-00)		
8	Coil, 23-800 [NO DIODE]	1	090-5001-ND
	COIL DOES NOT REQUIRE A DIODE. SEE ↻ COIL NOTE BELOW FOR DETAILS.		
9	Coil Sleeve	1	545-5031-00
	(ASM. REF. 500-6092-03-ND, Items 6-9)		

Nr.	SWITCH PARTS	QTY.	SPI PART Nr.
10	Switch *(for Shooter Lane)*	1	180-5157-00
	Switch has a Diode (1N4004) (112-5003-00). *Can be replaced with (1N4001) (112-5001-00).*		
11	Switch Mounting Bracket	1	535-6173-00
	Item 11 is secured to Playfield by: #6 X 1/2" SLT HWH AB (Zinc) (Qty. 2) (234-5001-02)		
12	Switch Body Protect Plate	1	535-6539-00
	Item 12 is secured to Items 10-11 by: #2-56 X 1/2" Unslotted Ser. HWH #4 Head TR3 Black (Qty. 2) (237-5937-02) **and** #2-56 Hex Nut (Qty. 2) (240-5301-0)		
	(ASM. REF. 500-6096-00, Items 10-12)		

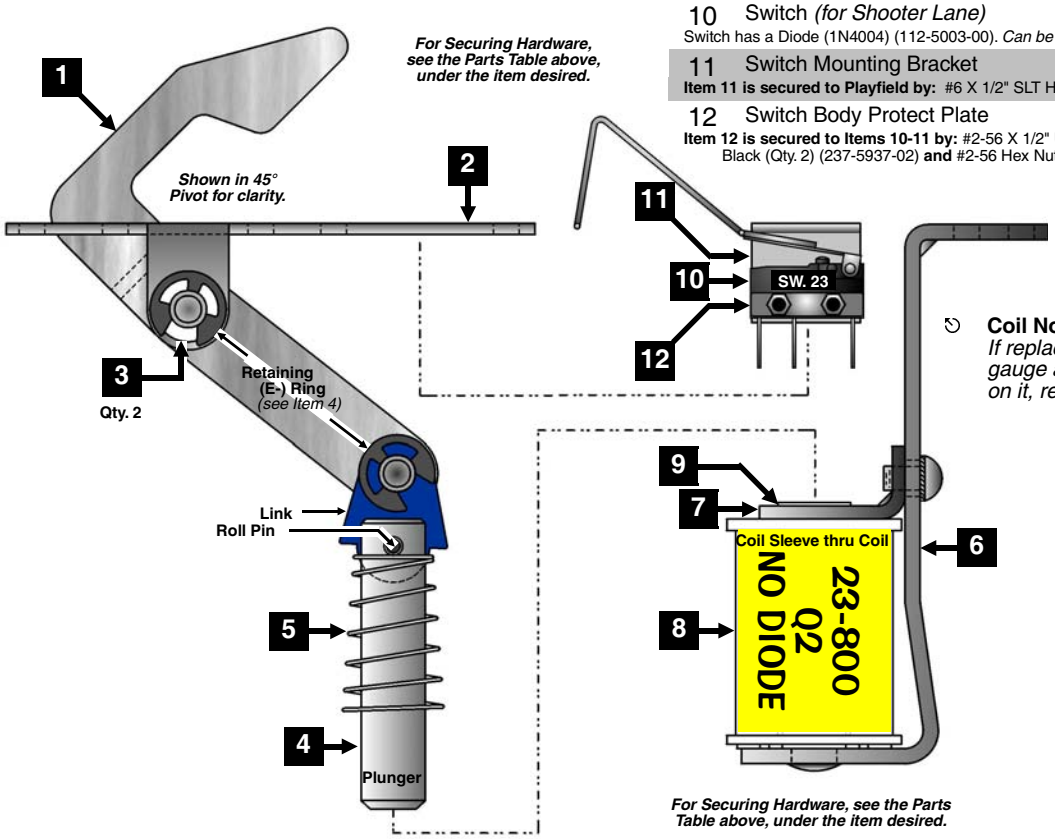

Take Note:

↻ **Coil Note: ↻ NO DIODE ON LUGS.** *If replacing with a coil of the same gauge and turn and it has a diode on it, remove it before using.*

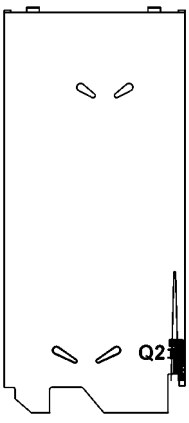

4-Ball Trough Assembly, 500-6318-14-ND (Items 1-13)
and Associated Parts: See Parts Table Below.

Ordering Note: Identical to 500-6318-24 with exceptions, see note below Item 13 (Parts Table).

Nr.	4-BALL TROUGH PARTS	QTY.	SPI PART Nr.
1	Ball Trough Outhole Mounting Bracket **Item 1 is secured below the playfield by:** #8 X 1/2" SHWH AB (Zc.) (Qty. 4) (234-5101-00)	1	515-6580-01
2	Coil Mounting Bracket **Item 2 is secured to Item 1 by:** #8-32 X 3/8" HWH Swage (Sr.) Zinc (Qty. 4) (237-5975-00)	1	535-7330-01
3	Coil Retaining Bracket **Item 3 is secured to Item 2 by:** #8-32 X 1/4" SHWH (Serr) Zinc (Qty. 2) (237-5975-04)	1	535-5203-03
4	Coil, 26-1200 [NO DIODE] **COIL DOES NOT REQUIRE A DIODE. SEE ⟲ COIL NOTE BELOW FOR DETAILS.**	1	090-5044-ND
5	Coil Sleeve (Short) (Formost #10-7077)	1	545-5076-01
6	Steel & Nylon Plunger Assembly	1	515-5941-01
7	Compression (Return) Spring	1	266-5020-00
8	Rubber Bumper (Grommet)	1	545-5105-00
9	Micro Switch **(Roller Actuator, Lite-Force)** **Item 9 requires:** Heat Shrink Tubing 1/8" ø PUI-24 (Qty. 1"/per) (605-5006-00) Switch has a Diode (1N4004) (112-5003-00). *Can be replaced with (1N4001) (112-5001-00).*	3	180-5119-02
10	Switch Body Protect Plate	3	535-6539-00
11	Trough Ball Guide Plate **Item 11 is secured to Item 1 by:** 1/4" X 5/16" X .144" I.D. Spacer Tap. (Qty. 1) (254-5014-03) **and** #2-56 X 1/2" HWH (Ser) UNS #4HD TR3 BO (Qty. 4) (237-5937-02)	0	535-7801-00
12	Dual OPTO TRANS Board Assembly	1	515-0173-00
13	Dual OPTO REC Board Assembly **Items 12 & 13 are secured by:** #6-32 X 5/8" HWH Swg (Ser) Zc (Qty. 3/per) (237-5976-04) ***For Individual Items use :*** Dual OPTO Transmitter Board (Qty. 1) (**520-5173-00**), Dual OPTO Receiver Board (Qty. 1) (**520-5174-00**), OPTO PCB Tube Spacer (Brass) (Qty. 3/per) (**530-5308-02**) **and** OPTO PCB Rubber Grommet (Qty. 3/per) (**545-5518-00**)	1	515-0174-00

Ordering Note: *If* **500-6318-14-ND** *is unavailable, order the individual part(s) actually required. This assembly is identical to* ***500-6318-24-ND, -15*** *or* ***-25*** *except for the quantity of* ***Items 9 & 10*** *(Qty. 4/per on 5-Ball Trough)* ***and Item 11****, required when a Magnet Mech. is used in the game (this game not required).* ***-ND*** *means* ***no diode*** *on* ***Item 4****, Coil, 26-1200.*

ASSOCIATED PARTS **ARE NOT INCLUDED** WITH THE ABOVE ASSEMBLY.

Nr.	ASSOCIATED PART(S)	QTY.	SPI PART Nr.
AP-A	Ball Trough Enter/Exit Scoop **Item AP-A secured to the playfield by:** #8 X 1/2" SHWH AB (Zinc) (Qty. 4) (234-5101-00).	1	535-7329-01
AP-B	* Steel Balls (1-1/16" ø)	4	260-5000-00

Take Special Note:

Item **AP-A**, Enter / Exit Scoop, **535-7329-01** (*not included with the 4-Ball Trough Assembly),* is shown floating above and how it is mounted above the playfield over the 4-Ball Trough Assembly.

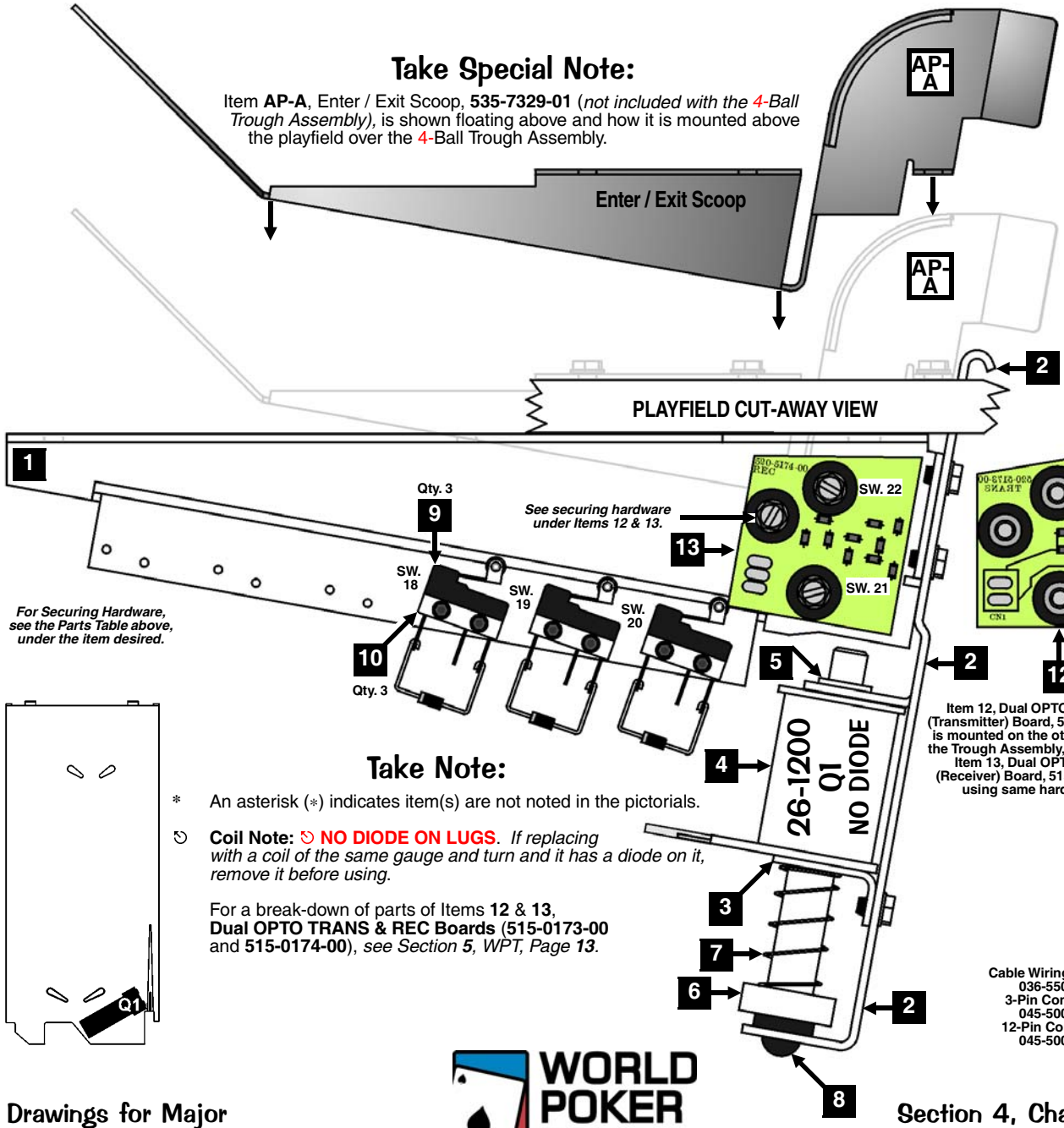

Take Note:

* An asterisk (*) indicates item(s) are not noted in the pictorials.

⟲ **Coil Note: ⟲ NO DIODE ON LUGS**. *If replacing with a coil of the same gauge and turn and it has a diode on it, remove it before using.*

For a break-down of parts of Items **12** & **13**, **Dual OPTO TRANS & REC Boards** (**515-0173-00** and **515-0174-00**), *see Section **5**, WPT, Page **13**.*

Sec. 4: Drawings ...

Flipper (Left) Assembly, 500-6543-12-ND (Items 1-15)
and Assoc. Parts: White Flipper Bat & Shaft Assy., 515-5133-08-06 (Items AP-A/-B)

Nr.	FLIPPER (LEFT) PARTS	QTY.	SPI PART Nr.
1	Flipper Base Plate (**LEFT**)	1	**See FRP1**
	Item 1 is secured below the playfield by: #10 X 1/2" HWH MS (Serr) Zinc ST (Qty. 8) (237-5949-00) ***Ordering Note:*** *Use Item* ***FRP1****, see the end of this Parts Table.*		
2	Flipper Bat Bushing (White Plastic) .25" ø I.D.	1	545-5070-00
	Item 2 is secured to Item 1 by: #6-32 X 3/8" HWH Swage (Ser.) Zc. (Qty. 3) (237-5976-02)		
3	Power (EOS / End-of-Stroke) Switch	1	180-5149-00
	Item 3 is secured to Item 1 by: #6-32 X 5/8" HWH Swage (Ser.) Zc. (Qty. 2) (237-5976-04)		
4	Sw. Plate/Spring Return Brkt. (**LEFT**)	1	535-7354-**01**
5	Flipper Return Spring	1	265-5035-00
6	Coil Stop Bracket Sub-Assembly	1	515-6308-01
	Item 6 is secured to Item 1 by: #10-32 X 3/8" SHWH Swage (Serr) Zinc (Qty. 2) (237-5985-00) **and** #10 Split Lock Washer (Qty. 2) (244-5003-00)		
7	Spring Washer (17/32" ID X 3/4" X 1")	1	269-5002-00
8	Coil Support Bracket	1	535-7356-00
	Item 8 is secured to Item 1 by: #8-32 X 3/8" HWH Swage (Ser.) Zc. (Qty. 2) (237-5975-00)		
9	Coil, 22-1080 [NO DIODE] (Left)	1	090-5032-ND
	COIL DOES NOT REQUIRE A DIODE. SEE ↻ COIL NOTE BELOW FOR DETAILS.		
10	Coil Sleeve	1	545-5388-00
11	Deflector Pad (Bumper)	1	545-5428-00
12	Flipper Plunger & Link Sub-Assy.	1	515-6304-03
	For Individual Items use : Flipper Plunger (**530-5349-01**) **and** Plunger "Flipper" Link (**545-5611-01**) **and is secured to the Plunger by:** Bushing, .16" ø ID X .281" ø OD X .187" (Qty. 1) (530-5532-00) **and** Spiral Pin ø 5/32" X 3/4" Lg. (Qty. 1) (251-5015-02)		

Nr.	FLIPPER (LEFT) PARTS	QTY.	SPI PART Nr.
13	Crank Bar	1	530-5070-02
	Item 13 requires: Bushing, .192" ø ID X .312" ø OD X .195" (Qty. 1) (530-5139-00)		
14®	Switch Actuator (**LEFT**) Sub-Assy.	1	515-7257-**01**
	For Individual Items use : Actuator & Spring Bracket (**LEFT**) (**535-9038-01**) **and** ® Switch Actuator (White Plastic) (**545-5612-00**) **and is secured to the Bracket by:** Rivet, 1/8" ø X 1/4" Lg. (Qty. 1) (249-5003-00)		
15	Set Screw: #10-32 X 3/4" Socket Hd.	2	237-6144-00
	Item 15 requires: #10-32 Nylon Stop Nut (Qty. 1 *Flipper Link Side Only*) (240-5203-00) **and** #10 Split Lock Washer (244-5003-00) ***Tool Required for Item 15:*** **5/32" or 4mm Allen Wrench**		

Flipper Rebuild Parts for Easier Installation, $ave $:

FRP1	**Flipper Base Plate Kit (LEFT)** *Includes Item 1 pre-threaded, with the Securing Hardware for Items 2, 3, 6 & 8.*	515-6617-**01**
FRP2	**Plunger, Link & Crank (LEFT) Assy.** *Includes above Items 12, 13, 14 and 15 and is pre-assembled.*	515-7203-**01**
FRP3	**Flipper (LEFT) Rebuild Kit** *Same as* ***FRP2****, but also includes above Items 6 & 10.*	500-6307-**10**

ASSOCIATED PARTS **ARE NOT INCLUDED** WITH THE ABOVE ASSEMBLY.

Nr.	ASSOCIATED PART(S)	QTY.	SPI PART Nr.
AP-A	**WHITE** Flipper Bat (Plain) & Shaft (Non-Knurled End) Assembly	1	515-5133-08-06
AP-B	Large Flipper **BLACK** Rubber Ring	1	545-5277-00

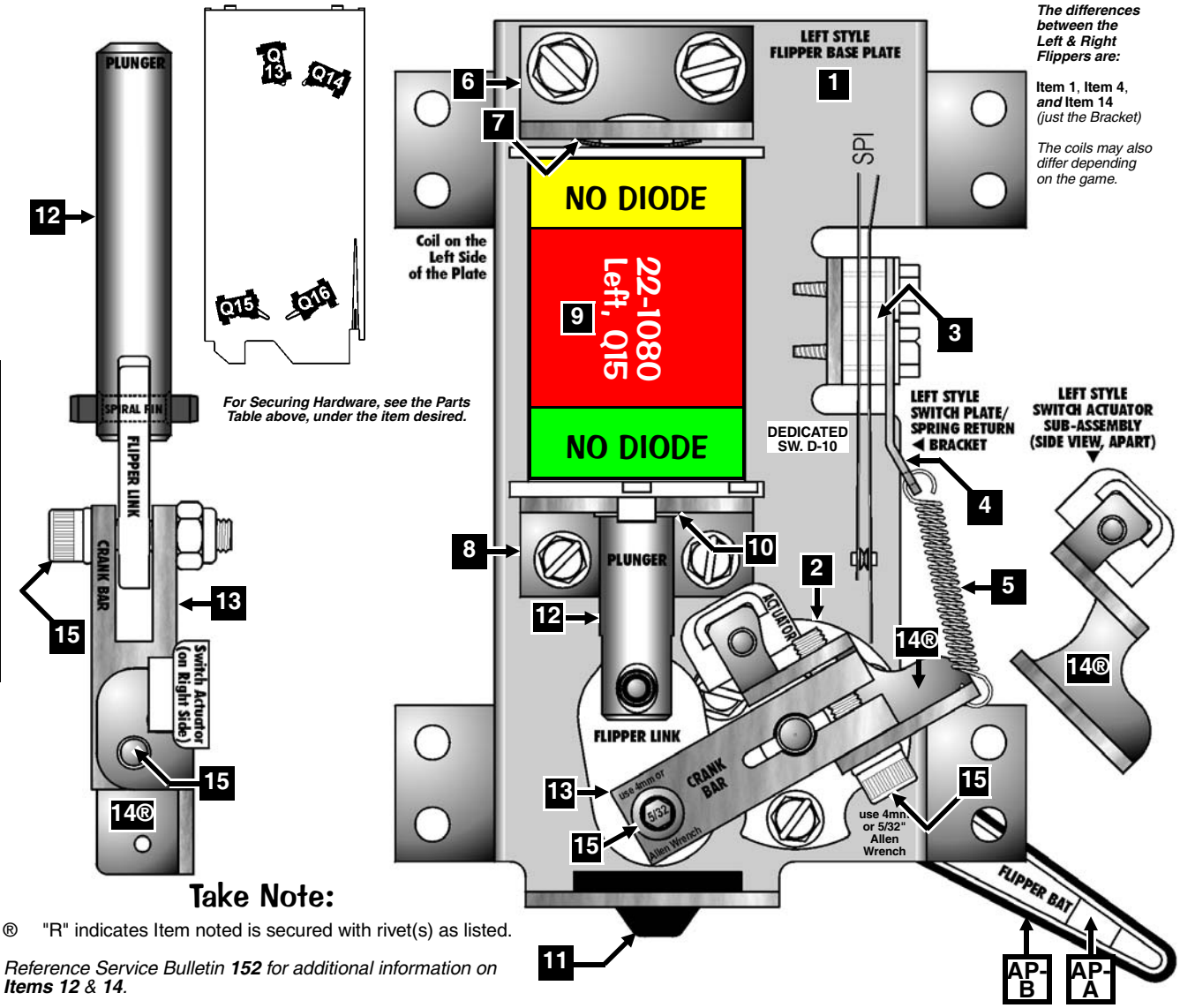

Take Note:

® "R" indicates Item noted is secured with rivet(s) as listed.

Reference Service Bulletin ***152*** *for additional information on* ***Items 12*** *&* ***14****.*

* *To Order the Flipper (Left) Rebuild Kit ask for Part Nr.: 500-6307-10 (includes Items 6, 10, 12, 13, 14 & 15)*

Flipper (Right) Assembly, 500-6543-02-ND (Items 1-15)
and Assoc. Parts: White Flipper Bat & Shaft Assy., 515-5133-08-06 (Items AP-A/-B)

Nr.	FLIPPER (RIGHT) PARTS	QTY.	SPI PART Nr.
1	Flipper Base Plate (**RIGHT**)	1	**See FRP1**
	Item 1 is secured below the playfield by: #10 X 1/2" HWH MS (Serr) Zinc ST (Qty. 8) (237-5949-00) ***Ordering Note:*** *Use Item **FRP1**, see the end of this Parts Table.*		
2	Flipper Bat Bushing (White Plastic) .25" ø I.D.	1	545-5070-00
	Item 2 is secured to Item 1 by: #6-32 X 3/8" HWH Swage (Ser.) Zc. (Qty. 3) (237-5976-02)		
3	Power (EOS / End-of-Stroke) Switch	1	180-5149-00
	Item 3 is secured to Item 1 by: #6-32 X 5/8" HWH Swage (Ser.) Zc. (Qty. 2) (237-5976-04)		
4	Sw. Plate/Spring Return Brkt. (**RIGHT**)	1	535-7354-**00**
5	Flipper Return Spring	1	265-5035-00
6*	Coil Stop Bracket Sub-Assembly	1	515-6308-01
	Item 6 is secured to Item 1 by: #10-32 X 3/8" SHWH Swage (Serr) Zinc (Qty. 2) (237-5985-00) **and** #10 Split Lock Washer (Qty. 2) (244-5003-00)		
7	Spring Washer (17/32" ID X 3/4" X 1")	1	269-5002-00
8	Coil Support Bracket	1	535-7356-00
	Item 8 is secured to Item 1 by: #8-32 X 3/8" HWH Swage (Ser.) Zc. (Qty. 2) (237-5975-00)		
9	Coil, 22-1080 [NO DIODE] (Right)	1	090-5032-ND
	COIL DOES NOT REQUIRE A DIODE. SEE ↻ COIL NOTE BELOW FOR DETAILS.		
10	Coil Sleeve	1	545-5388-00
11	Deflector Pad (Bumper)	1	545-5428-00
12	Flipper Plunger & Link Sub-Assy.	1	515-6304-03
	For Individual Items use : Flipper Plunger (**530-5349-01**) **and** Plunger "Flipper" Link (**545-5611-01**) **and is secured to the Plunger by:** Bushing, .16" ø ID X .281" ø OD X .187" (Qty. 1) (530-5532-00) **and** Spiral Pin ø 5/32" X 3/4" Lg. (Qty. 1) (251-5015-02)		
13	Crank Bar	1	530-5070-02
	Item 13 requires: Bushing, .192" ø ID X .312" ø OD X .195" (Qty. 1) (530-5139-00)		
14®	Switch Actuator (**RIGHT**) Sub-Assy.	1	515-7257-**00**
	For Individual Items use : Actuator & Spring Bracket (**RIGHT**) (**535-9038-00**) **and** ® Switch Actuator (White Plastic) (**545-5612-00**) **and is secured to the Bracket by:** Rivet, 1/8" ø X 1/4" Lg. (Qty. 1) (249-5003-00)		
15	Set Screw: #10-32 X 3/4" Socket Hd.	2	237-6144-00
	Item 15 requires: #10-32 Nylon Stop Nut (Qty. 1 *Flipper Link Side Only*) (240-5203-00) **and** #10 Split Lock Washer (244-5003-00) ***Tool Required for Item 15:*** **5/32" or 4mm Allen Wrench**		

Flipper Rebuild Parts for Easier Installation, $ave $:

FRP1	**Flipper Base Plate Kit (RIGHT)** *Includes Item 1 pre-threaded, with the Securing Hardware for Items 2, 3, 6 & 8.*	515-6617-**00**
FRP2	**Plunger, Link & Crank (RIGHT) Assy.** *Includes above Items 12, 13, 14 and 15 and is pre-assembled.*	515-7203-**00**
FRP3	**Flipper (RIGHT) Rebuild Kit** *Same as **FRP2**, but also includes above Items 6 & 10.*	500-6307-**00**

ASSOCIATED PARTS **ARE NOT INCLUDED** WITH THE ABOVE ASSEMBLY.

Nr.	ASSOCIATED PART(S)	QTY.	SPI PART Nr.
AP-A	**WHITE** Flipper Bat (Plain) & Shaft (Non-Knurled End) Assembly	1	515-5133-08-06
AP-B	Large Flipper **BLACK** Rubber Ring	1	545-5277-00

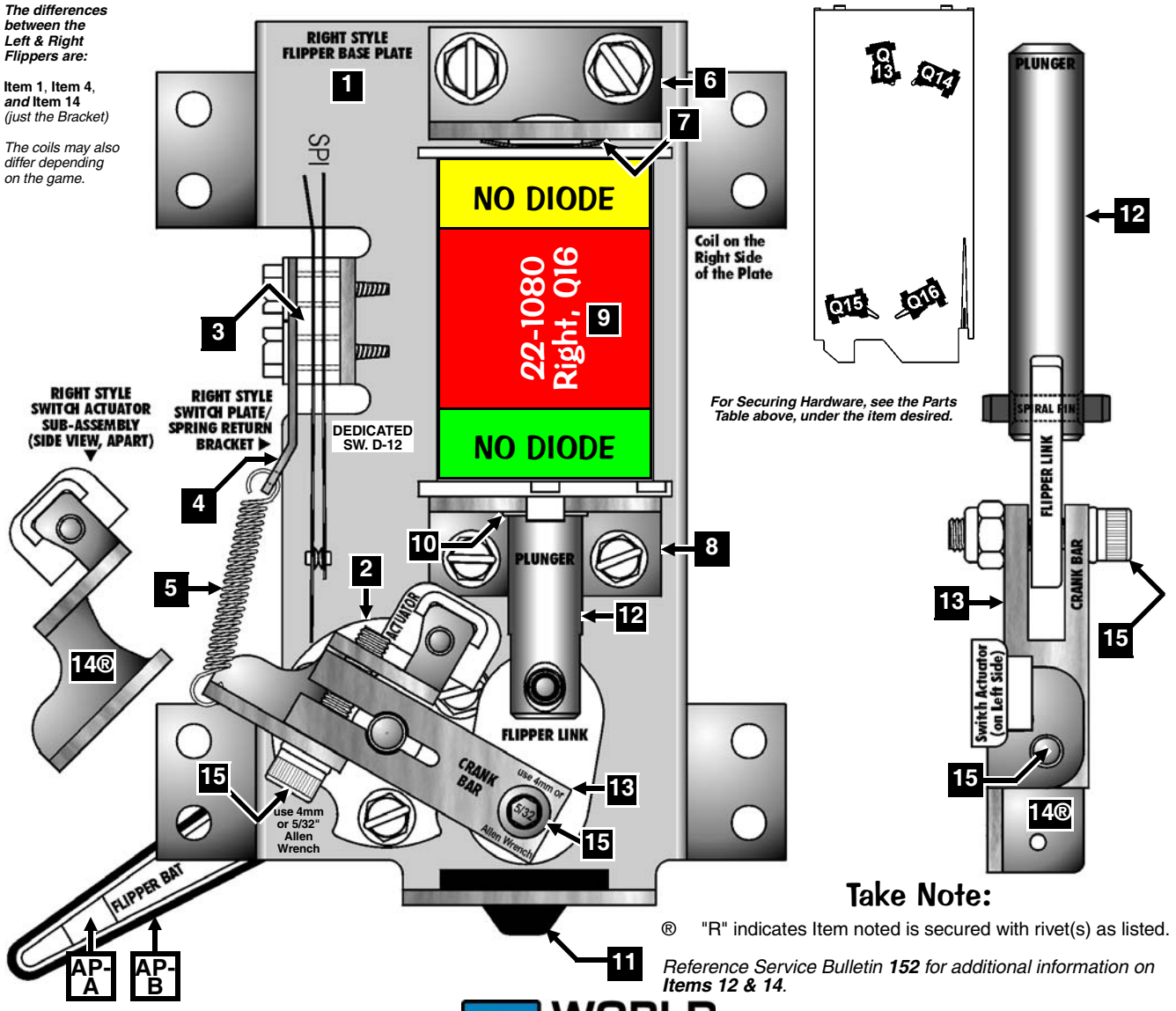

Take Note:

® "R" indicates Item noted is secured with rivet(s) as listed.

*Reference Service Bulletin **152** for additional information on **Items 12 & 14**.*

* To Order the Flipper (Right) Rebuild Kit ask for Part Nr.: 500-6307-00 (includes Items 6, 10, 12, 13, 14 & 15)

Sec. 4: Drawings ...

Flipper (Upper Left) Assembly, 500-6543-54-NDR (Items 1-15)
and Assoc. Parts: White Mini Flipper Bat & Long Shaft Assy., 515-7265-08 (Items AP-A thru -D)

Nr.	FLIPPER (UPR. LT.) PARTS	QTY.	SPI PART Nr.
1	Flipper Base Plate (**LEFT**)	1	***See Note***
	Item 1 is secured below the playfield by: #10 X 1/2" HWH MS (Serr) Zinc ST (Qty. 8) (237-5949-00) ***Ordering Note:*** *Use Item* ***FRP1****, see the end of this Parts Table.*		
2	Flipper Bat Bushing ('Red' Plastic) .281" ø I.D.	1	545-5070-**01**
	Item 2 is secured to Item 1 by: #6-32 X 3/8" HWH Swage (Ser.) Zc. (Qty. 3) (237-5976-02)		
3	Power (EOS / End-of-Stroke) Switch	1	180-5149-00
	Item 3 is secured to Item 1 by: #6-32 X 5/8" HWH Swage (Ser.) Zc. (Qty. 2) (237-5976-04)		
4	Sw. Plate/Spring Return Brkt. (**LEFT**)	1	535-7354-**01**
5	Flipper Return Spring	1	265-5035-00
6	Coil Stop Bracket Sub-Assembly	1	515-6308-01
	Item 6 is secured to Item 1 by: #10-32 X 3/8" SHWH Swage (Serr) Zinc (Qty. 2) (237-5985-00) **and** #10 Split Lock Washer (Qty. 2) (244-5003-00)		
7	Spring Washer (17/32" ID X 3/4" X 1")	1	269-5002-00
8	Coil Support Bracket	1	535-7356-00
	Item 8 is secured to Item 1 by: #8-32 X 3/8" HWH Swage (Ser.) Zc. (Qty. 2) (237-5975-00)		
9	Coil, 23-1100 [NO DIODE] (Left)	1	090-5030-ND
	COIL DOES NOT REQUIRE A DIODE. SEE ↻ COIL NOTE BELOW FOR DETAILS.		
10	Coil Sleeve	1	545-5388-00
11	Deflector Pad (Bumper)	1	545-5428-00
12	Flipper Plunger & Link Sub-Assy.	1	515-6304-03
	For Individual Items use : Flipper Plunger (**530-5349-01**) **and** Plunger "Flipper" Link (**545-5611-01**) **and is secured to the Plunger by:** Bushing, .16" ø ID X .281" ø OD X .187" (Qty. 1) (530-5532-00) **and** Spiral Pin ø 5/32" X 3/4" Lg. (Qty. 1) (251-5015-02)		

Nr.	FLIPPER (UPR. LT.) PARTS	QTY.	SPI PART Nr.
13	Crank Bar	1	530-5070-02
	Item 13 requires: Bushing, .192" ø ID X .312" ø OD X .195" (Qty. 1) (530-5139-00)		
14®	Switch Actuator (**LEFT**) Sub-Assy.	1	515-7257-**01**
	For Individual Items use : Actuator & Spring Bracket (**LEFT**) (**535-9038-01**) **and** ® Switch Actuator (White Plastic) (**545-5612-00**) **and is secured to the Bracket by:** Rivet, 1/8" ø X 1/4" Lg. (Qty. 1) (249-5003-00)		
15	Set Screw: #10-32 X 3/4" Socket Hd.	2	237-6144-00
	Item 15 requires: #10-32 Nylon Stop Nut (Qty. 1 *Flipper Link Side Only*) (240-5203-00) **and** #10 Split Lock Washer (244-5003-00) ***Tool Required for Item 15:*** **5/32" or 4mm Allen Wrench**		

Flipper Rebuild Parts for Easier Installation, $ave $:
For parts FRP1-3, see Flip. (Left) Asm. Parts Table.

ASSOCIATED PARTS **ARE NOT INCLUDED** WITH THE ABOVE ASSEMBLY.

Nr.	ASSOCIATED PART(S)	QTY.	SPI PART Nr.
AP-A	**WHITE** Mini-Flipper Bat (Plain) and 6" Shaft (Non-Knurled End) Assembly	1	515-7265-08
AP-B	Small Flipper **BLACK** Rubber Ring	1	545-5207-00
AP-C	**WHITE** Bushing Spacer, .25" I.D. X 1" O.D. X .63" Thick	1	530-5633-00
AP-D	**CLEAR** Tube Spacer, .375" I.D. X .5" O.D. X 2.072" Length	1	530-5634-01

The White Mini FLipper Bat & Long Shaft (6") IS NOT SHOWN in the correct size / proportion to the Flipper Assembly due to space restraints.

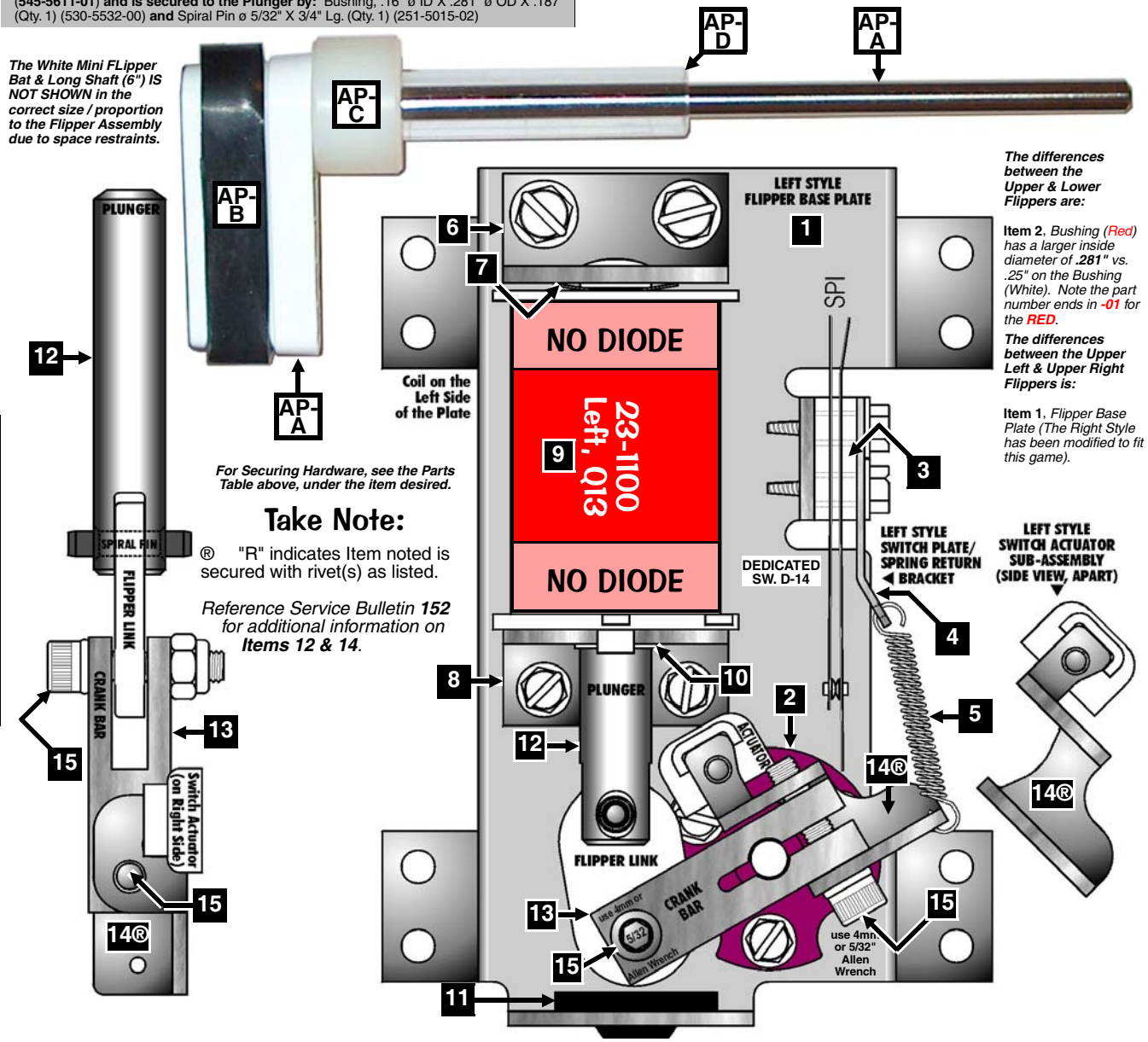

For Securing Hardware, see the Parts Table above, under the item desired.

Take Note:

® "R" indicates Item noted is secured with rivet(s) as listed.

Reference Service Bulletin ***152*** *for additional information on* ***Items 12 & 14****.*

The differences between the Upper & Lower Flippers are:

Item 2, *Bushing (Red) has a larger inside diameter of* ***.281"*** *vs. .25" on the Bushing (White). Note the part number ends in* ***-01*** *for the* ***RED****.*

The differences between the Upper Left & Upper Right Flippers is:

Item 1, *Flipper Base Plate (The Right Style has been modified to fit this game).*

**** To Order the Flipper (Left) Rebuild Kit ask for Part Nr.: 500-6307-10 (includes Items 6, 10, 12, 13, 14 & 15)***

Flipper (Upper Right) Assembly, 500-6543-44-NDR (Items 1-15)
and Assoc. Parts: White Mini Flipper Bat & Long Shaft Assy., 515-7265-08 (Items AP-A thru -D)

Nr.	FLIPPER (UPR. RT.) PARTS	QTY.	SPI PART Nr.
1	Flipper 3-Footed Base Plate (**RIGHT**)	1	***See FRP1***
	Item 1 is secured below the playfield by: #10 X 1/2" HWH MS (Serr) Zinc ST (Qty. 6) (237-5949-00) ***Ordering Note:*** *Use Item **FRP1**, see the end of this Parts Table.*		
2	Flipper Bat Bushing ('Red' Plastic) .281" ø I.D.	1	545-5070-**01**
	Item 2 is secured to Item 1 by: #6-32 X 3/8" HWH Swage (Ser.) Zc. (Qty. 3) (237-5976-02)		
3	Power (EOS / End-of-Stroke) Switch	1	180-5149-00
	Item 3 is secured to Item 1 by: #6-32 X 5/8" HWH Swage (Ser.) Zc. (Qty. 2) (237-5976-04)		
4	Sw. Plate/Spring Return Brkt. (**RIGHT**)	1	535-7354-**00**
5	Flipper Return Spring	1	265-5035-00
6*	Coil Stop Bracket Sub-Assembly	1	515-6308-01
	Item 6 is secured to Item 1 by: #10-32 X 3/8" SHWH Swage (Serr) Zinc (Qty. 2) (237-5985-00) **and** #10 Split Lock Washer (Qty. 2) (244-5003-00)		
7	Spring Washer (17/32" ID X 3/4" X 1")	1	269-5002-00
8	Coil Support Bracket	1	535-7356-00
	Item 8 is secured to Item 1 by: #8-32 X 3/8" HWH Swage (Ser.) Zc. (Qty. 2) (237-5975-00)		
9	Coil, 23-1100 [NO DIODE] (Right)	1	090-5030-ND
	COIL DOES NOT REQUIRE A DIODE. SEE ⏲ COIL NOTE BELOW FOR DETAILS.		
10	Coil Sleeve	1	545-5388-00
11	Deflector Pad (Bumper)	1	545-5428-00
12	Flipper Plunger & Link Sub-Assy.	1	515-6304-03
	For Individual Items use : Flipper Plunger (**530-5349-01**) **and** Plunger "Flipper" Link (**545-5611-01**) **and is secured to the Plunger by:** Bushing, .16" ø ID X .281" ø OD X .187" (Qty. 1) (530-5532-00) **and** Spiral Pin ø 5/32" X 3/4" Lg. (Qty. 1) (251-5015-02)		

Nr.	FLIPPER (UPR. RT.) PARTS	QTY.	SPI PART Nr.
13	Crank Bar	1	530-5070-02
	Item 13 requires: Bushing, .192" ø ID X .312" ø OD X .195" (Qty. 1) (530-5139-00)		
14®	Switch Actuator (**RIGHT**) Sub-Assy.	1	515-7257-**00**
	For Individual Items use : Actuator & Spring Bracket (**RIGHT**) (**535-9038-00**) **and** ® Switch Actuator (White Plastic) (**545-5612-00**) **and is secured to the Bracket by:** Rivet, 1/8" ø X 1/4" Lg. (Qty. 1) (249-5003-00)		
15	Set Screw: #10-32 X 3/4" Socket Hd.	2	237-6144-00
	Item 15 requires: #10-32 Nylon Stop Nut (Qty. 1 *Flipper Link Side Only*) (240-5203-00) **and** #10 Split Lock Washer (244-5003-00) ***Tool Required for Item 15:*** **5/32" or 4mm Allen Wrench**		

Flipper Rebuild Parts for Easier Installation, $ave $:

FRP1	**Flipper 3-Footed Base Plate Kit (RIGHT)** *Includes Item 1 **MODIFIED** & pre-threaded, with the Sec. Hardware for Items 2, 3, 6 & 8.*	515-6617-**88**

For parts FRP2-3, see Flip. (Right) Asm. Parts Table.

ASSOCIATED PARTS **ARE NOT INCLUDED** WITH THE ABOVE ASSEMBLY.

Nr.	ASSOCIATED PART(S)	QTY.	SPI PART Nr.
AP-A	**WHITE** Mini-Flipper Bat (Plain) and 6" Shaft (Non-Knurled End) Assembly	1	515-7265-08
AP-B	Small Flipper **BLACK** Rubber Ring	1	545-5207-00
AP-C	**WHITE** Bushing Spacer, .25" I.D. X 1" O.D. X .63" Thick	1	530-5633-00
AP-D	**CLEAR** Tube Spacer, .375" I.D. X .5" O.D. X 2.072" Length	1	530-5634-01

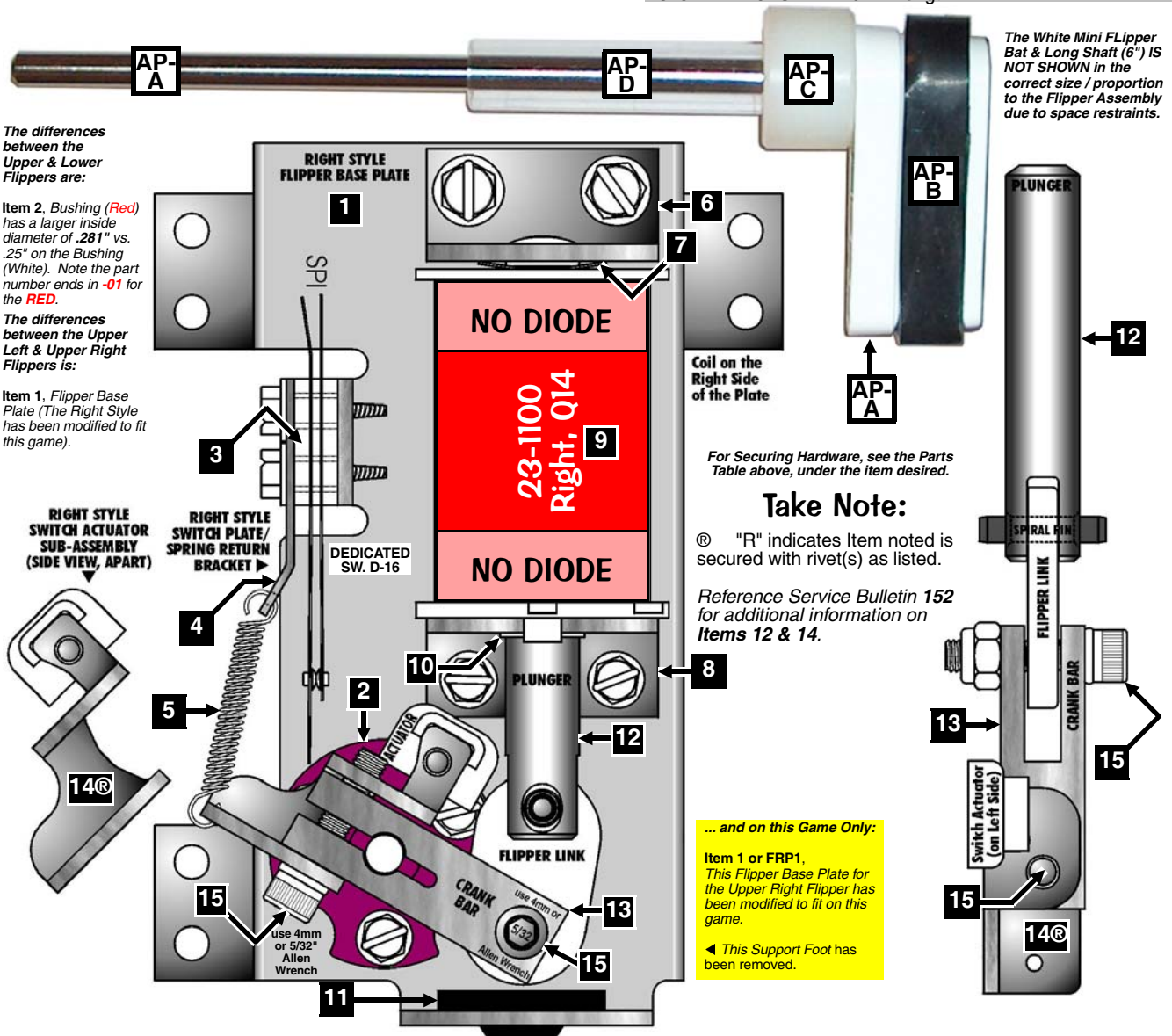

* To Order the Flipper (Right) Rebuild Kit ask for Part Nr.: 500-6307-00 (includes Items 6, 10, 12, 13, 14 & 15)

Sec. 4: Drawings ...

Slingshot (Left & Right) Assemblies, 500-5849-00-ND (Qty. 2) (Items 1-9)

Nr.	SLINGSHOT PARTS	QTY.	SPI PART Nr.
1	Slingshot Bracket Assembly	1/per	515-5339-01
	Item 1 is secured below the playfield by: #8 X 1/2" SHWH AB (Zc.) (Qty. 3) (234-5101-00)		
2	Coil Retaining Bracket	1/per	535-5203-03
	Item 2 is secured to Item 1 by: #8-32 X 3/8" PPH MS (Sems) (Qty. 2) (232-5301-00)		
3	Coil, 23-800 [NO DIODE]	1/per	090-5001-ND
	COIL DOES NOT REQUIRE A DIODE. SEE ⍉ COIL NOTE BELOW FOR DETAILS.		
4	Coil Sleeve	1/per	545-5031-00
5	Plunger & Link Assembly	1/per	515-5338-00
	For Individual Items use : Plunger 2" Lg. (**530-5025-01**), Plunger Link (**545-5293-00**) **and** Roll Pin 1/8" ø x 5/8" Lg. (**251-5008-00**) **The Plunger Link is secured to the Riveted Arm by:** Retaining Ring, 1/4" ø Shaft (Qty. 1) (270-5002-00)		
	Ordering Note: *If* **515-5338-00** *is unavailable*, order the individual part(s) actually required.		

Nr.	SLINGSHOT PARTS	QTY.	SPI PART Nr.
6	Compression (Return) Spring	1/per	266-5020-00
7	Slingshot Stack (Blade) Switch	2/per	180-5054-00
	Only **1** of the 2 Switches has a Diode (1N4004) (112-5003-00). *See Note Below on Drawing. Can be replaced with (1N4001) (112-5001-00).*		
8	Switch Body Protect Plate	2/per	535-5045-00
	Items 7 & 8 are secured to Item 1 by: #6-32 X 5/8" HWH Swage (Qty. 4) (237-5976-04)		
9®	Riveted Arm & Tip Assembly	1/per	515-5340-01
	For Individual Parts use (requires drilling out rivet & rereviting) : Arm (**515-5341-01**), Kicker Tip (**545-5216-01**) **and** Rivet, 1/8" ø x 1/4" Lg. (**249-5003-00**) **The Riv. Arm is secured to Item 1 by:** Retaining Ring, 1/4" ø Shaft (Qty. 1) (270-5002-00)		
	Ordering Note: *If* **515-5340-01** *is unavailable*, order the individual part(s) actually required.		
	Ordering Note: *If* **500-5849-00-ND** *is unavailable*, order the individual part(s) actually required. This assembly is identical to **500-5849-00** with the exception of **Item 3**, which uses a Coil, 23-800, with a Diode across the lugs (**090-5001-00T**) instead.		

Take Note:

⍉ **Coil Note:** ⍉ **NO DIODE ON LUGS**. *If replacing with a coil of the same gauge and turn and it has a diode on it, remove it before using.*

® "R" indicates Item noted is secured with rivet(s) as listed.

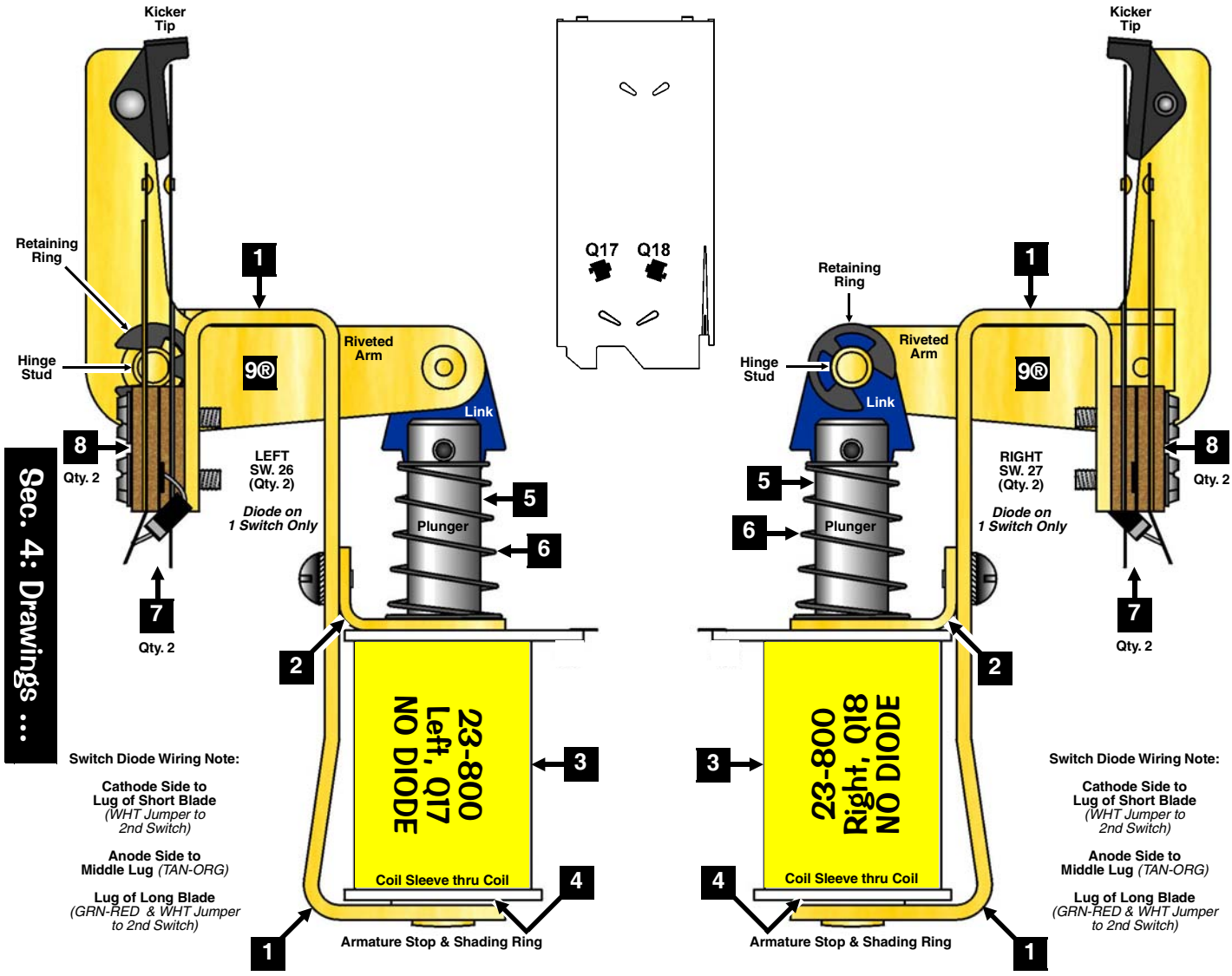

Left Side View

For Securing Hardware, see the Parts Table above, under the item desired.

Right Side View

Sec. 4: Drawings ...

Bumper Top, Bumper Bottom & Bumper Switch Individual Parts Only (Items 1-18) and Associated Part: See Parts Table Below.

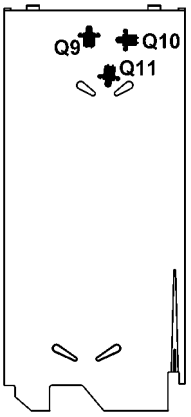

Top Exploded View

Special Note:

DOTS: *The Lamp Diode, 1N4001, is not located on the socket (nor included); it's located on a Terminal Strip under the playfield.* *See Section 5, Chapter 2, Playfield Terminal Strips.., Page 111, for more details.*

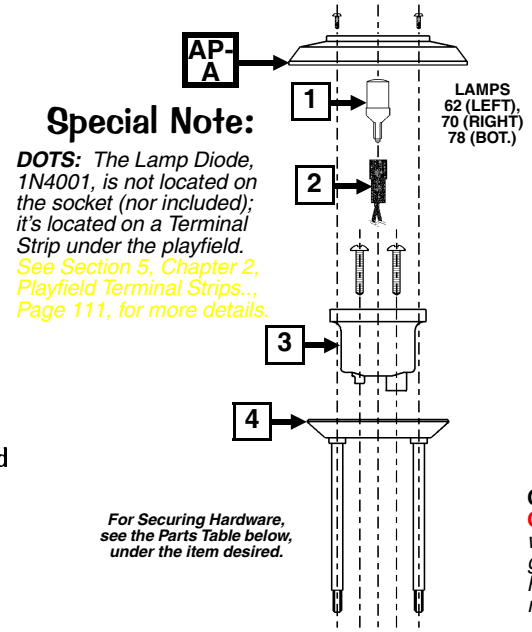

For Securing Hardware, see the Parts Table below, under the item desired.

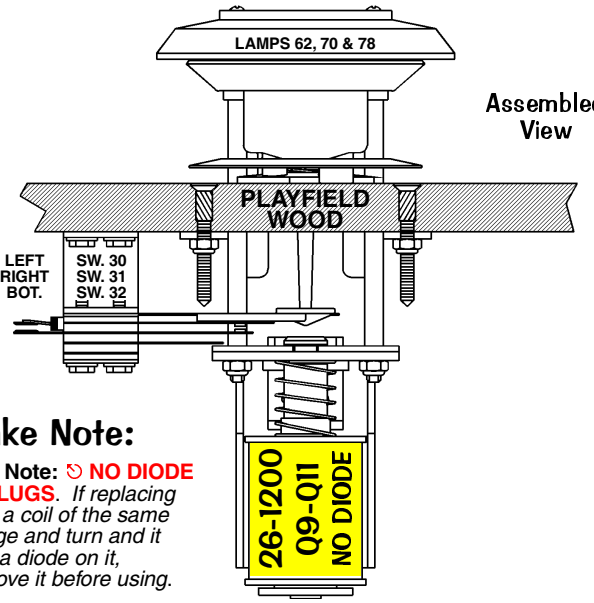

Assembled View

Take Note:

Coil Note: NO DIODE ON LUGS. *If replacing with a coil of the same gauge and turn and it has a diode on it, remove it before using.*

Ordering Note:

Individual parts can be ordered. However, if the entire Bumper is required, use the ***ASM. REF.*** *Number(s) under each section in the Parts Table.*

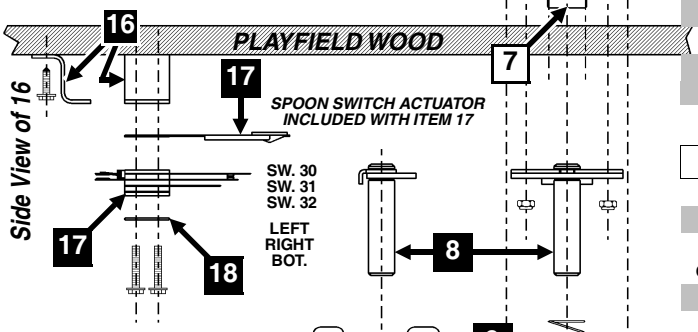

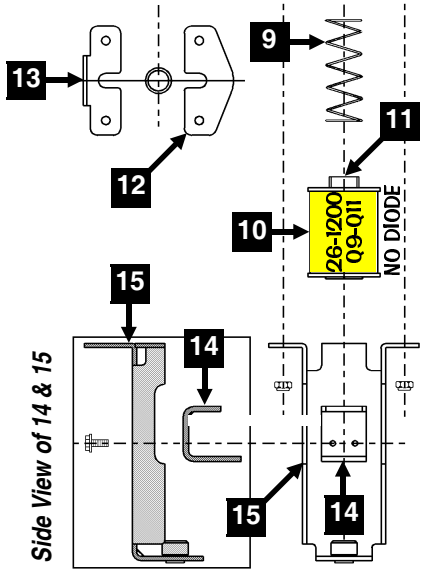

Bottom Exploded View

Nr.	BUMPER TOP PARTS	QTY.	SPI PART Nr.
1	LED Module (WHT) (6.3v) Wedge Base	1/per	112-5024-08
2	Wedge Base Socket	1/per	077-5206-00
3	Bumper Body	1/per	545-5197-00
	Item 3 is secured by: #5 X 7/8" PRH AB (Zinc) (Qty. 2/per) (237-5826-00)		
4	Ring Assembly	1/per	515-5085-00
	Item 4 is secured by: #6-32 Nylon Stop Nut (Qty. 2/per) (240-5005-00)		
5	Bumper Skirt	1/per	545-5607-00
6	Bumper Skirt Compression Spring	1/per	266-5048-00
7	Bumper Base	1/per	545-5195-00
	(ASM. REF. 515-6459-**01L** (Qty. 3), Items 1-7)		

Nr.	BUMPER BOTTOM PARTS	QTY.	SPI PART Nr.
8	Plunger	1/per	530-5348-00
9	Compression (Return) Spring	1/per	266-5047-00
10	Coil, 26-1200 [NO DIODE]	1/pe	090-5044-ND
	COIL DOES NOT REQUIRE A DIODE. SEE COIL NOTE BELOW FOR DETAILS.		
11	Coil Sleeve	1/per	545-5031-00
12	Fiber Yoke	1/per	545-5609-00
13	Metal Yoke	1/per	535-7346-00
14	Metal Yoke Stop	1/per	535-7347-00
	Item 14 is secured by: #6-32 X 1/4" HWH Swage (Serr.) Zinc (Qty. 2/per) (237-5976-01)		
15	Coil Bracket Welded Assembly	1/per	515-5939-00
	Item 15 is secured by: #6-32 X 1-3/16" Spiral Fin Shank (Qty. 3/per) (237-5957-00) **and** #6-32 Nylon Stop Nut (Qty. 3/per) (240-5005-00)		
	(ASM. REF. **515-6459-04-ND** (Qty. 3), Items 8-15)		

The Top & Bottom Assemblies are secured together by hardware included in assemblies.

Nr.	BUMPER SWITCH PARTS	QTY.	SPI PART Nr.
16	Switch Bracket	1/per	535-7342-00
	Item 16 is secured by: #8 X 1/2" HWH AB (Zinc) (Qty. 2/per) (234-5101-00)		
17	Bumper Stack (Blade) Switch Assy.	1/per	180-5015-04
	Included with Item 17 : Spoon Switch Actuator (**545-5610-02**). Switch has a Diode (1N4004) (112-5003-00). *Can be replaced with (1N4001) (112-5001-00).*		
18	Switch Body Protect Plate	1/per	535-7344-00
	Items 17 & 18 are secured by: #6-32 X 3/4" HWH Swage (Serr) Zc. (Qty. 2) (237-5976-05)		
	(ASM. REF. 515-6459-09 (Qty. 3), Items 16-18)		

ASSOCIATED PARTS **ARE NOT INCLUDED** WITH THE ABOVE ASSEMBLIES.

Nr.	ASSOCIATED PART(S)	QTY.	SPI PART Nr.
AP-A	Bumper [Pop] Cap (Red)	3	550-5057-02
	Item AP-A is secured by: #4 X 3/4" PRH (Zinc) T-25 (Qty. 2/per) (237-5873-00)		

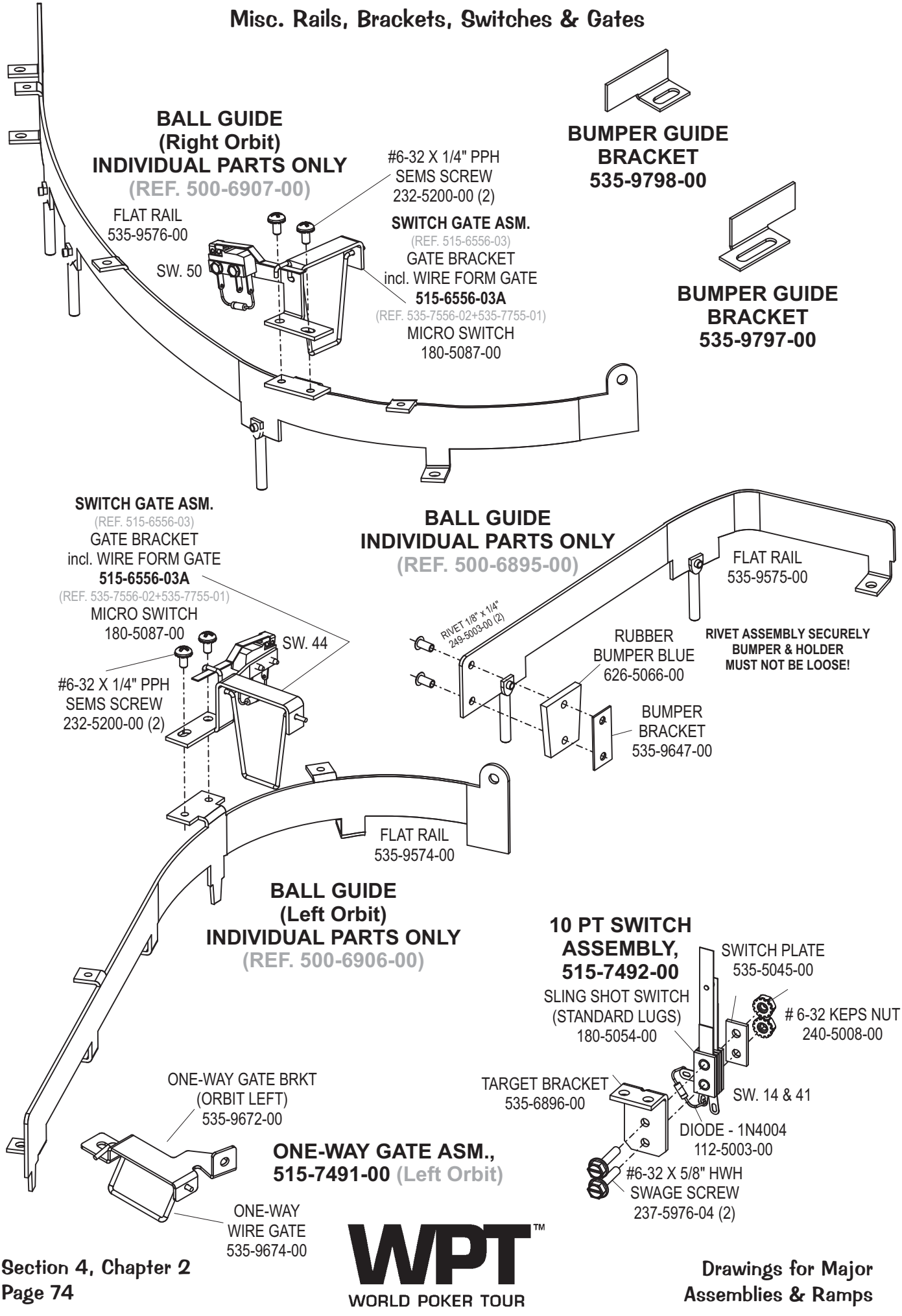
BALL GUIDE
(Right Orbit)
INDIVIDUAL PARTS ONLY
(REF. 500-6907-00)
#6-32 X 1/4" PPH
SEMS SCREW
232-5200-00 (2)
FLAT RAIL
535-9576-00
SW. 50
SWITCH GATE ASM.
(REF. 515-6556-03)
GATE BRACKET
incl. WIRE FORM GATE
515-6556-03A
(REF. 535-7556-02+535-7755-01)
MICRO SWITCH
180-5087-00
BUMPER GUIDE
BRACKET
535-9798-00
BUMPER GUIDE
BRACKET
535-9797-00
SWITCH GATE ASM.
(REF. 515-6556-03)
GATE BRACKET
incl. WIRE FORM GATE
515-6556-03A
(REF. 535-7556-02+535-7755-01)
MICRO SWITCH
180-5087-00
SW. 44
#6-32 X 1/4" PPH
SEMS SCREW
232-5200-00 (2)
BALL GUIDE
INDIVIDUAL PARTS ONLY
(REF. 500-6895-00)
FLAT RAIL
535-9575-00
RIVET 1/8" x 1/4"
249-5003-00 (2)
RUBBER
BUMPER BLUE
626-5066-00
RIVET ASSEMBLY SECURELY
BUMPER & HOLDER
MUST NOT BE LOOSE!
BUMPER
BRACKET
535-9647-00
FLAT RAIL
535-9574-00
BALL GUIDE
(Left Orbit)
INDIVIDUAL PARTS ONLY
(REF. 500-6906-00)
10 PT SWITCH
ASSEMBLY,
515-7492-00
SWITCH PLATE
535-5045-00
SLING SHOT SWITCH
(STANDARD LUGS)
180-5054-00
6-32 KEPS NUT
240-5008-00
TARGET BRACKET
535-6896-00
SW. 14 & 41
DIODE - 1N4004
112-5003-00
#6-32 X 5/8" HWH
SWAGE SCREW
237-5976-04 (2)
ONE-WAY GATE BRKT
(ORBIT LEFT)
535-9672-00
ONE-WAY GATE ASM.,
515-7491-00 (Left Orbit)
ONE-WAY
WIRE GATE
535-9674-00

VUK (at Eject Popper) Assembly, 500-6867-01 (Items 1-11)
and Associated Parts: See Parts Table Below.

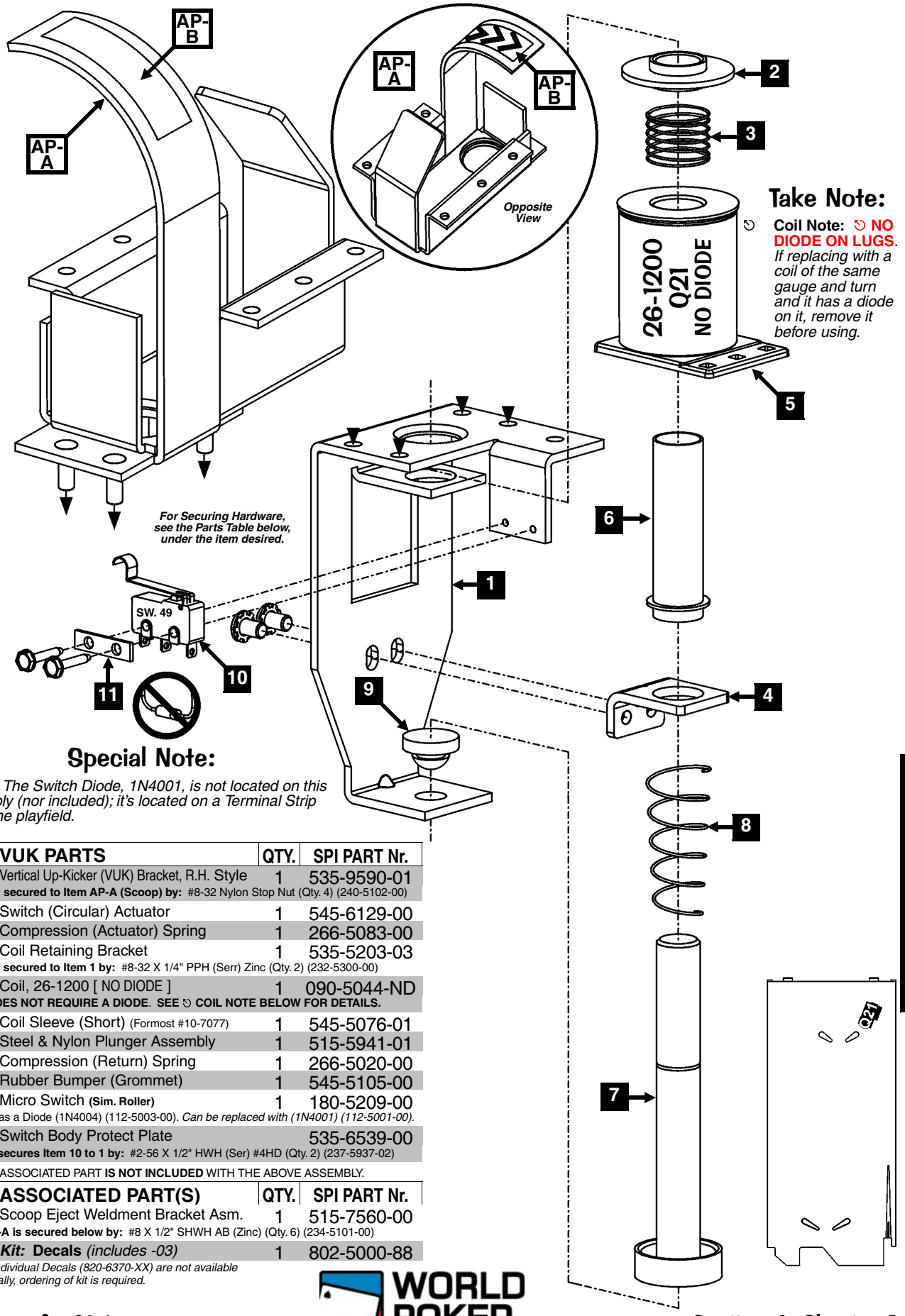

For Securing Hardware, see the Parts Table below, under the item desired.

Take Note:

Coil Note: ⟲ **NO DIODE ON LUGS.** *If replacing with a coil of the same gauge and turn and it has a diode on it, remove it before using.*

Special Note:

DOTS: *The Switch Diode, 1N4001, is not located on this Assembly (nor included); it's located on a Terminal Strip under the playfield.*

Nr.	VUK PARTS	QTY.	SPI PART Nr.
1	Vertical Up-Kicker (VUK) Bracket, R.H. Style	1	535-9590-01
	Item 1 is secured to Item AP-A (Scoop) by: #8-32 Nylon Stop Nut (Qty. 4) (240-5102-00)		
2	Switch (Circular) Actuator	1	545-6129-00
3	Compression (Actuator) Spring	1	266-5083-00
4	Coil Retaining Bracket	1	535-5203-03
	Item 4 is secured to Item 1 by: #8-32 X 1/4" PPH (Serr) Zinc (Qty. 2) (232-5300-00)		
5	Coil, 26-1200 [NO DIODE]	1	090-5044-ND
	COIL DOES NOT REQUIRE A DIODE. SEE ⟲ COIL NOTE BELOW FOR DETAILS.		
6	Coil Sleeve (Short) (Formost #10-7077)	1	545-5076-01
7	Steel & Nylon Plunger Assembly	1	515-5941-01
8	Compression (Return) Spring	1	266-5020-00
9	Rubber Bumper (Grommet)	1	545-5105-00
10	Micro Switch **(Sim. Roller)**	1	180-5209-00
	Switch has a Diode (1N4004) (112-5003-00). *Can be replaced with (1N4001) (112-5001-00).*		
11	Switch Body Protect Plate		535-6539-00
	Item 11 secures Item 10 to 1 by: #2-56 X 1/2" HWH (Ser) #4HD (Qty. 2) (237-5937-02)		

ASSOCIATED PART **IS NOT INCLUDED** WITH THE ABOVE ASSEMBLY.

Nr.	ASSOCIATED PART(S)	QTY.	SPI PART Nr.
AP-A	Scoop Eject Weldment Bracket Asm.	1	515-7560-00
	Item AP-A is secured below by: #8 X 1/2" SHWH AB (Zinc) (Qty. 6) (234-5101-00)		
AP-B	***Kit:*** **Decals** *(includes -03)*	1	802-5000-88

Note: *Individual Decals (820-6370-XX) are not available individually, ordering of kit is required.*

VUK (at Shooter Lane) Assembly, 500-6867-01 (Items 1-11)

Ball is delivered up into the Shooter Tube (next page).

Nr.	VUK PARTS	QTY.	SPI PART Nr.
1	Vertical Up-Kicker (VUK) Bracket, R.H. Style	1	535-9590-01
	Item 1 is secured below the playfield by: #8 X 1/2" SHWH AB (Zc.) (Qty. 5) (234-5101-00)		
2	Switch (Circular) Actuator	1	545-6129-00
3	Compression (Actuator) Spring	1	266-5083-00
4	Coil Retaining Bracket	1	535-5203-03
	Item 4 is secured to Item 1 by: #8-32 X 1/4" PPH (Serr) Zinc (Qty. 2) (232-5300-00)		
5	Coil, 26-1200 [NO DIODE]	1	090-5044-ND
	COIL DOES NOT REQUIRE A DIODE. SEE ⏲ COIL NOTE BELOW FOR DETAILS.		
6	Coil Sleeve (Short) (Formost #10-7077)	1	545-5076-01
7	Steel & Nylon Plunger Assembly	1	515-5941-01
8	Compression (Return) Spring	1	266-5020-00
9	Rubber Bumper (Grommet)	1	545-5105-00
10	Micro Switch **(Sim. Roller)**	1	180-5209-00
	Switch has a Diode (1N4004) (112-5003-00). *Can be replaced with (1N4001) (112-5001-00).*		
11	Switch Body Protect Plate	1	535-6539-00
	Item 11 secures Item 10 to 1 by: #2-56 X 1/2" HWH (Ser) #4HD (Qty. 2) (237-5937-02)		

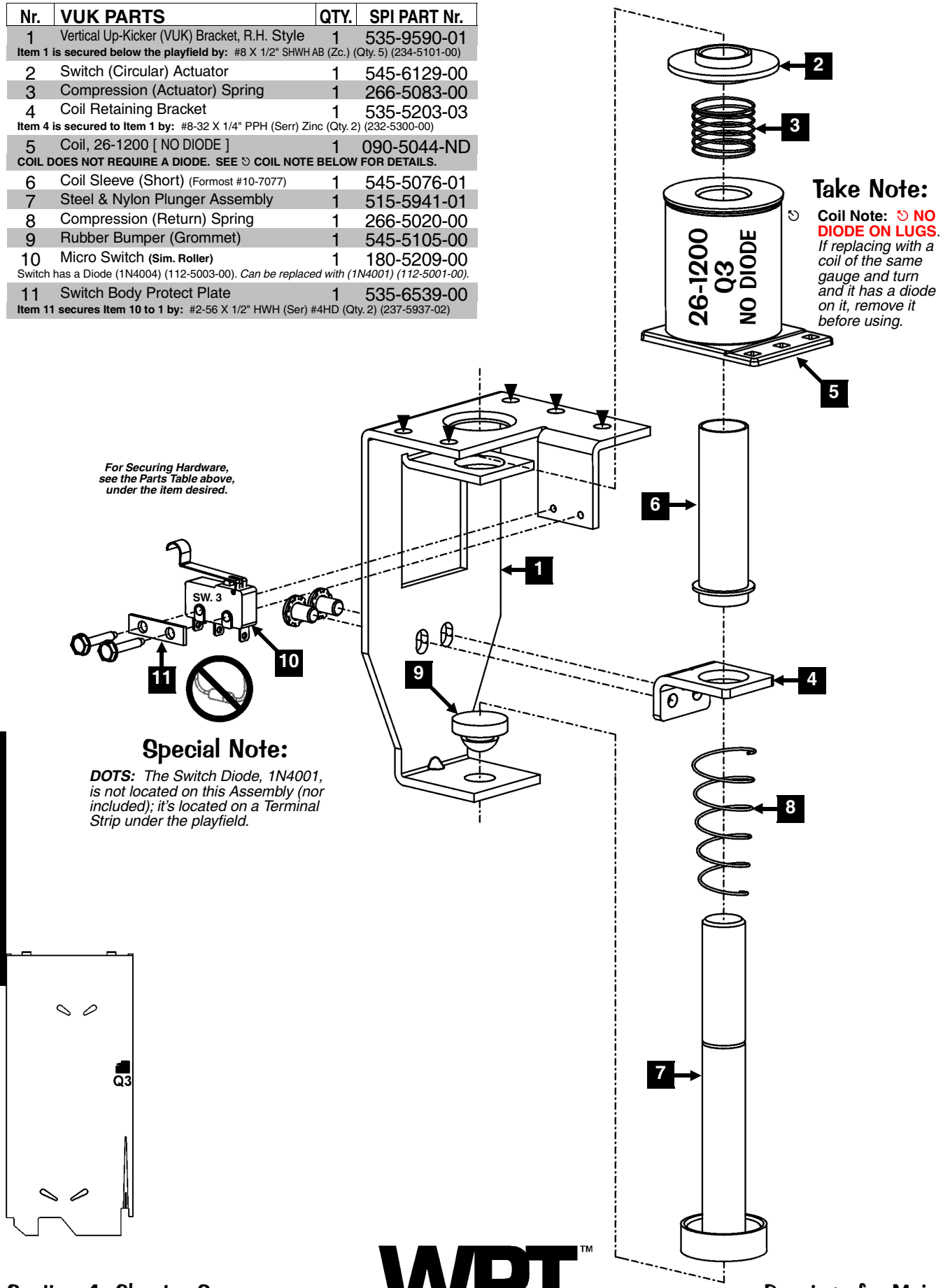

For Securing Hardware, see the Parts Table above, under the item desired.

Take Note:

Coil Note: ⏲ NO DIODE ON LUGS. *If replacing with a coil of the same gauge and turn and it has a diode on it, remove it before using.*

Special Note:

DOTS: *The Switch Diode, 1N4001, is not located on this Assembly (nor included); it's located on a Terminal Strip under the playfield.*

Shooter Tube & Shooter Wire Ramp Individual Parts Only (Items 1-18)

Ball exits the Shooter Tube onto the 'Upper Playfield' (next page) via the Shooter Wire Ramp.

Nr.	SHOOTER TUBE PARTS	QTY.	SPI PART Nr.
1	Wire Ramp (Short) Plain No Parts	1	535-9650-00
	Item 1 is secured onto the upper playfield on the Post Hex Base #8-32 Tap by: #8-32 X 1/2" PPH (232-5302-00). Post Hex Base #8-32 Thread #8-32 Tap (530-5332-04) **and** #8 Washer .17" I.D. X 1/2" O.D. X .042" (Qty. 2 above/below wire tab) (242-5015-00)		
2	Wire Form for Gate (Rt. Hand Style)	1	535-9375-01
3	Micro Switch (1-5/8" Flat Actuator)	1	180-5010-01
	Switch has a Diode (1N4004) (112-5003-00). *Can be replaced with (1N4001) (112-5001-00).*		
4	Switch Body Protect Plate	2	535-6539-00
	Items 4 / -SW are sec'd to Item 1 by: #2-56 X 1/2" HWH (Ser) #4HD (Qty. 2) (237-5937-02)		
5	Shooter Lift Tube Weldment Assembly	1	515-7488-00
6	Bumper **BLK** Pad (Lg. w/ grommet)	1	545-5428-00
7	1-Way Gate Bracket	1	535-9182-00
8	Wire Form for Ball Gate Bracket (ASM. REF. 515-7260-01, Items 7-8 Only)	1	535-9183-01
9	Plastic Mounting Bracket	1	535-9759-00
	Items 7 & 9 are secured to the Pem Stud on Item 1 by: #8 Washer (242-5005-00) **and** #8-32 Nylon Stop Nut (240-5102-00)		
10	Mini-Mars Lite Cover (Red)	1	550-5031-02
11	2-Lug Stand-Up Short Socket	1	077-5101-00
	Items 10 & 11 are secured to -21 Plastic (Item 13) @ 1 tab by: #6-32 X 1/2" PPH MS Sems (Zinc) (232-5202-00) **and** #6-32 Nylon Stop Nut (240-5005-00)		

Nr.	SHOOTER TUBE PARTS	QTY.	SPI PART Nr.
12	#89 Bulb *Heavy Filament* (Bayonet)	1	165-5000-89-HF
13	***Kit:* Plastics** *(includes -21, -28, -SW)*	1	803-5000-88
	Plastic -21 secr'd to Item 9 by: #6-32 X 1/4" SHWH Swg. Ser (Zinc) (Qty. 2) (237-5976-01)		
14	1-1/16" 1-Groove Plastic Post (Clear)	1	550-5059-01
	Item 14 is secures Plastic -28 to Plastic -21 & Item 10 @ opposite tab by: #6-32 X 1-3/4" PPH MS (Zinc) (237-5511-00) **and** #6-32 Nylon Stop Nut (240-5005-00)		
15	Mini-Jewel Plastic Post (Clear)	1	550-5052-01
	Item 15 is secured to Plastic -28 by: #6 X 1/2" PTR AB (Zinc) (237-5809-00)		
16	1-Groove Jewel Plastic Post (Clear)	1	550-5034-01
	Items 16 is secured to Plastic -28 by: #6-32 X 1-1/2" PPH MS (Zinc) (237-5510-00) **and** #6-32 Nylon Stop Nut (240-5005-00)		
17	5/16" I.D. Rubber Ring **BLACK**	1	545-5348-02
18	***Kit:* Decals** *(incl. -13 Top; -14 Side)*	1	802-5000-88
	Note: *Individual Plastics (830-6038-XX) & Decals (820-6370-XX) are not available individually, ordering of kit is required.*		

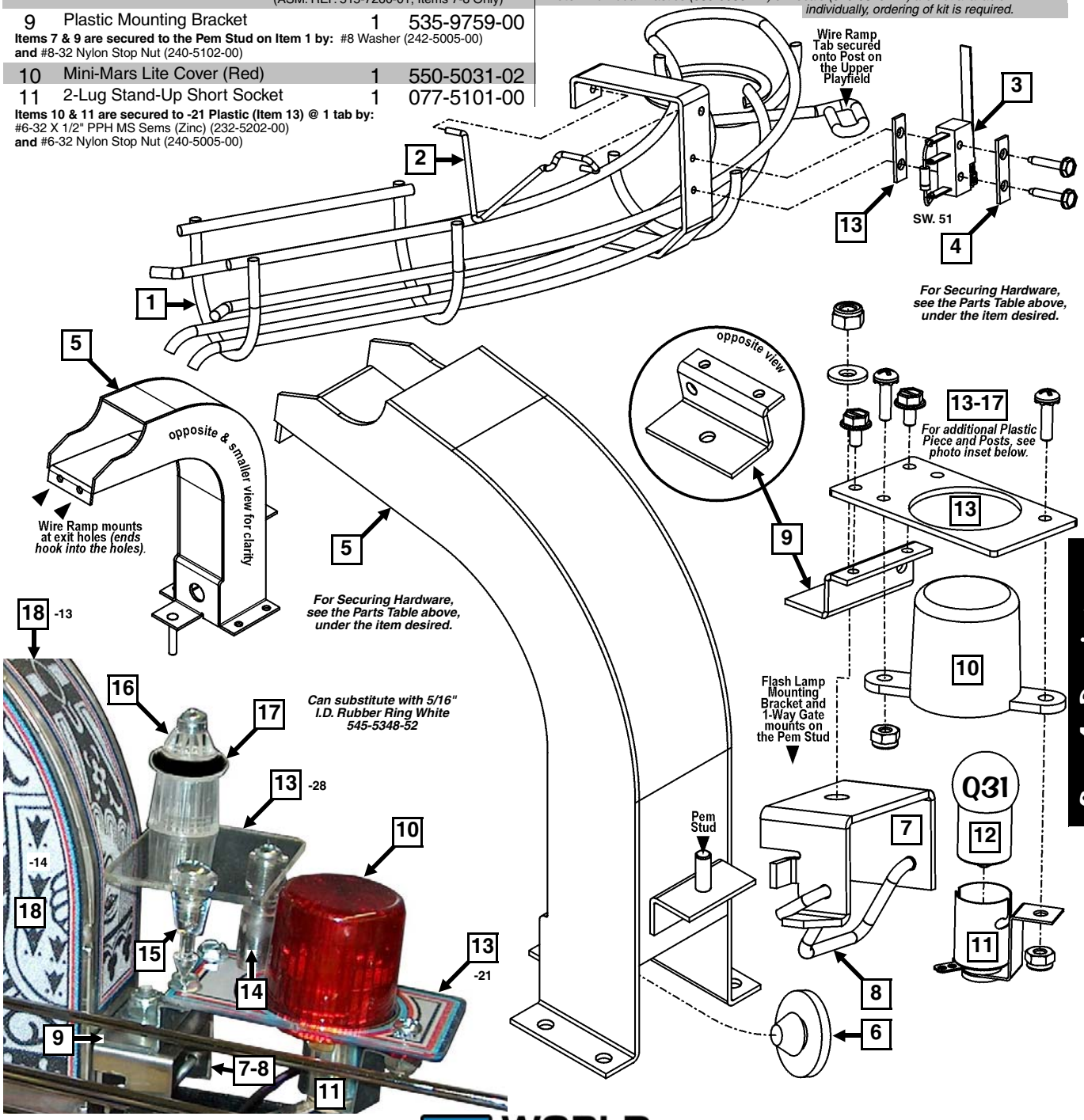

Upper Playfield & Right Wire Ramp Individual Parts Only (Items 1-15)

Nr.	UPPER PLAYFIELD PARTS	QTY.	SPI PART Nr.
1	***Kit:* Plastics** *(830-6039-00 Only)*	1	803-5001-88
2	Flat Rail (Ball Guide)	1	535-9666-00
3	"L" Bracket (Playfield Support)	1	535-9676-00
	Items 2 & 3 are secured below by: #8-32 X 5/8" SHWH Swg. Ser. (Zinc) (237-5975-03) **and** #8-32 Nylon Stop Nut (240-5102-00) **and Item 3 is secured to the Back Panel by:** #6 X 1/2" PTH A (Zinc) (237-5809-00)		
4	Right Wire Ramp Locating Bracket	1	535-9673-00
	Item 4 is secured @ tabs below by: #6-32 X 1/2" PFH (Zinc) (Qty. 2) (237-5918-00) **and** #6-32 Nylon Stop Nut (Qty. 2) (240-5005-00)		
5	Hex Bumper Post **#8-32 Tap/#8-32 Bot.**	1	530-5332-04
	Item 5 is secured below by: #8 Washer (242-5005-00) **and** #8-32 Nylon Stop Nut (240-5102-00)		
6	Hex Spacer, 1-5/16" X 1/4"	1	254-5008-34
	Item 6 is secured below by: #6-32 X 5/8" PPH Sems (Zinc) (232-5203-00)		
7	Mini-Post MS / #10-32 Bot. .4" Thread	10	530-5005-01
	Item 7 is secured below by: #10-32 Nylon Stop Nut (Qty. 10) (240-5203-00)		
8	1-1/4" I.D. Rubber Ring **BLACK**	1	545-5348-06
9	1 I.D. Rubber Ring **BLACK**	1	545-5348-05
10	7/16" O.D. Rubber Ring **BLACK**	1	545-5348-17

Nr.	RT. WIRE RAMP PARTS	QTY.	SPI PART Nr.
11	Wire Ramp (Right) Plain No Parts	1	515-7480-00
	Item 11 is secured @ the mid-point tab over Plastic -16 by: #6-32 X 3/8" PFH 82° (237-5871-00). (ASM. REF. 500-6905-00, Items 11-14 + Wiring Only)		
12	Wire Form for Gate (Left Hand Style)	1	535-9375-00
13	Micro Switch (1-5/8" Flat Actuator)	1	180-5010-01
	Switch has a Diode (1N4004) (112-5003-00). *Can be replaced with (1N4001) (112-5001-00).*		
14	Switch Body Protect Plate	1	535-6539-00
15	***Kit:* Plastics** *(includes -SW)*	1	803-5000-88
	Items 14 & 15 are secured to Items 13 & 11 by: #2-56 X 1/2" HWH (Ser) #4HD (Qty. 2) (237-5937-02) ***Note:*** *Individual Plastics (830-6038-XX) are not available individually, ordering of kit is required.*		

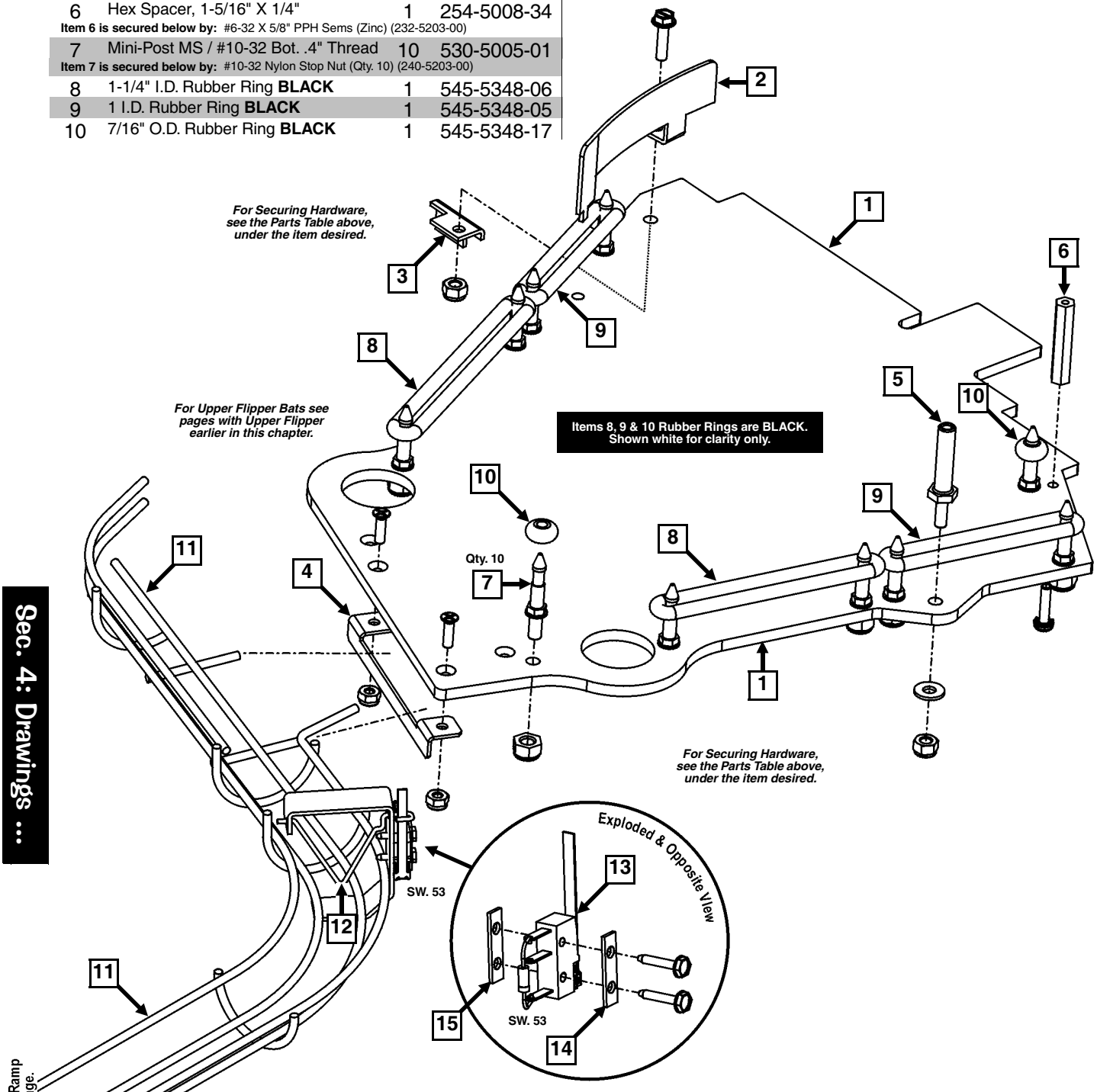

Right Steel Ramp & Right Wire Ramp Individual Parts Only (Items 1-9 & 11-15)

Ball can enter the 'Upper Playfield' (previous page) via the Right Steel Ramp and can exit from the 'Upper Playfield' onto the Right Wire Ramp (another exit is through the Back Panel).

Nr.	RT. STEEL RAMP PARTS	QTY.	SPI PART Nr.
1®	Right Steel Ramp & Flaps Asm.	1	515-7485-00
	Item 1 is secured under the playfield @ entrance by: #8 Washer (Qty. 2) (242-5005-00) **and** #8-32 Nylon Stop Nut (Qty. 2) (240-5102-00)		
	Reference Only : *Steel Ramp Weldment No Parts (**515-7484-00**), Lower Ramp Flap (**535-9589-00**) and Upper Ramp Flap (**535-9646-00**).* ***Secured by :*** *Rivet, 1/8" ø X 3/16" Lg. (249-5001-00)* ***and*** *#6 Riveting Lock Washer (both Qty. 2 Lwr., Qty. 4 Upr.) (246-5000-00)*		
2	Bumper Pad **BLUE (NON-RIVETING)**	2	626-5067-00
	Measurements: .88" Wide Top, .7" Wide Bottom, 1" Height, .25" Thick (2 Hole)		
3	Bumper Mounting Bracket	2	535-9648-00
	Items 2 & 3 are secured to Item 1 by: #4-40 X 1/4" PFH MS (Black) (Qty. 2/per) (237-5983-02)		
4	Wire Form (Front Gate Switch)	1	535-9649-00
5	Wire Form (Top Gate Switch)	1	535-9786-00
6	Micro Switch (1-5/8" Flat Actuator)	1	180-5010-01
	Switch has a Diode (1N4004) (112-5003-00). *Can be replaced with (1N4001) (112-5001-00).*		
7	Switch Body Protect Plate	2	535-6539-00
	Items 6 & 7 are secured to Items 13 & 11 by: #2-56 Hex Nut (Qty. 2) (240-5301-00)		
8	Transceiver OPTO PCB Assembly	2	500-6775-00
	Item 8 is secured to Item 1 by: #6 X 3/8" PPH (Zinc) Type -25 (Qty. 2/per) (237-5880-00)		
9	***Kit:*** **Plastics** *(includes -22)*	1	803-5000-88
	Item 9 is secured to Item 1 by: #6-32 X 3/8" HWH Swage Ser. (Zinc) (Qty. 2) (237-5976-02)		

Note: *Individual Plastics (830-6038-XX) are not available individually, ordering of kit is required.*

NO ITEM 10 THIS PAGE

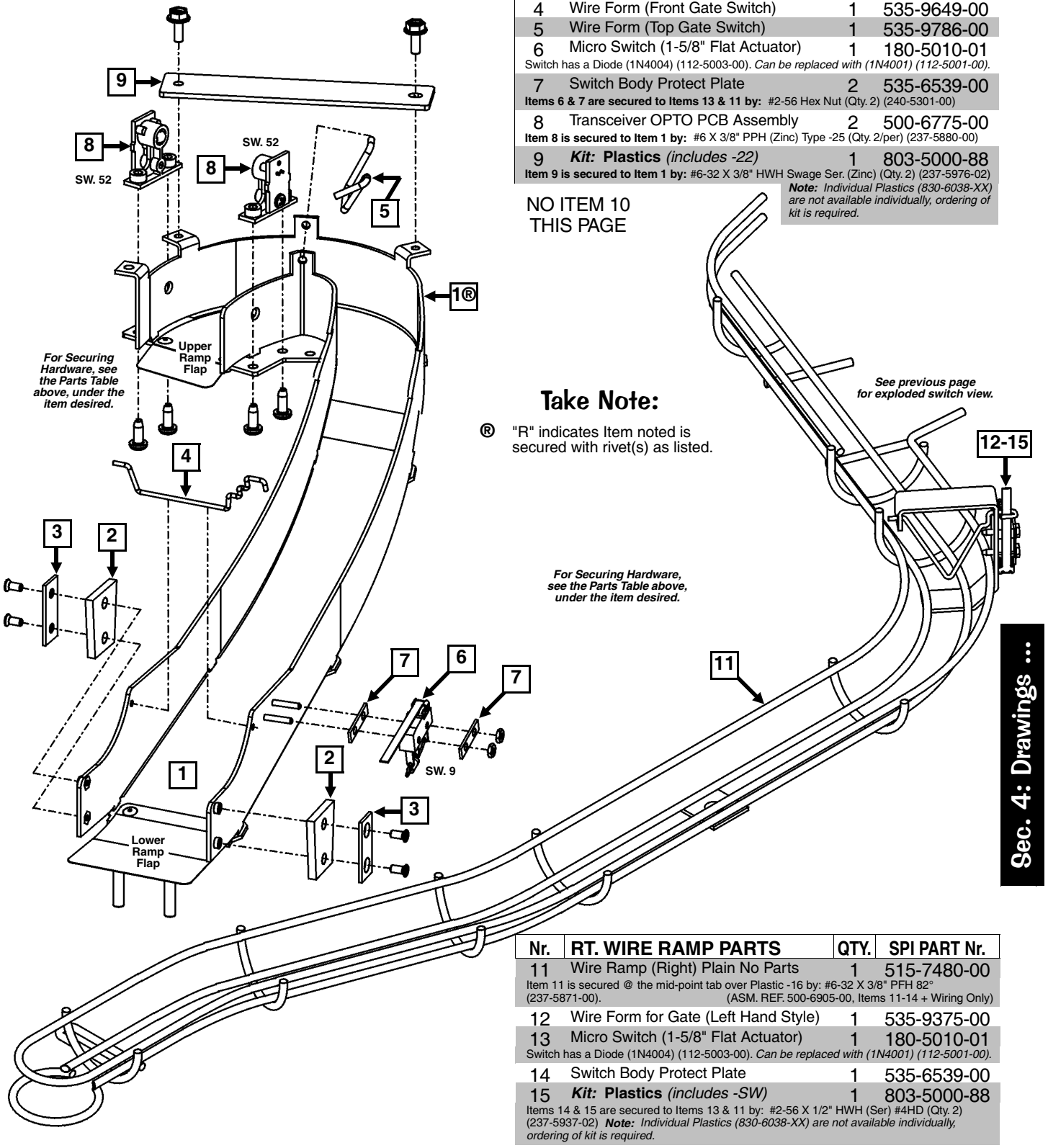

Take Note:

® "R" indicates Item noted is secured with rivet(s) as listed.

Nr.	RT. WIRE RAMP PARTS	QTY.	SPI PART Nr.
11	Wire Ramp (Right) Plain No Parts	1	515-7480-00
	Item 11 is secured @ the mid-point tab over Plastic -16 by: #6-32 X 3/8" PFH 82° (237-5871-00). (ASM. REF. 500-6905-00, Items 11-14 + Wiring Only)		
12	Wire Form for Gate (Left Hand Style)	1	535-9375-00
13	Micro Switch (1-5/8" Flat Actuator)	1	180-5010-01
	Switch has a Diode (1N4004) (112-5003-00). *Can be replaced with (1N4001) (112-5001-00).*		
14	Switch Body Protect Plate	1	535-6539-00
15	***Kit:*** **Plastics** *(includes -SW)*	1	803-5000-88
	Items 14 & 15 are secured to Items 13 & 11 by: #2-56 X 1/2" HWH (Ser) #4HD (Qty. 2) (237-5937-02) ***Note:*** *Individual Plastics (830-6038-XX) are not available individually, ordering of kit is required.*		

Ball Deflector (Left Ramp Up Post) Assembly, 500-6657-06-ND (Items 1-7)

Ball can be stopped (locked) in the Left Wire Ramp.

Nr.	BALL DEFLECTOR PARTS	QTY.	SPI PART Nr.
1	Ball Deflector Coil Mounting Bracket	1	535-9248-00
	Item 1 is secured below the playfield by: #8 X 1/2" SHWH AB (Zc.) (Qty. 3) (234-5101-00)		
2	Coil Retaining Bracket	2	535-5203-03
	Item 2 is secured by: #8-32 X 1/4" PPH MS (Sems) Zinc (Qty. 2/per) (232-5300-00)		
3	Coil, 25-1240 [NO DIODE]	1	090-5034-ND
	COIL DOES NOT REQUIRE A DIODE. SEE ⏲ COIL NOTE BELOW FOR DETAILS.		
4	Coil Sleeve *(with Extension)*	1	545-5847-00
5	Plunger with Nylon Tip	1	515-7223-01
	For Individual Items use : Plunger (**530-5210-00**) **and** Plunger Tip 3.31" (**530-5316-06**). **Plunger Tip is secured to the Plunger by:** Roll Pin 1/8" ø x 3/8" Lg. (Qty. 1) (251-5007-04)		
6	Compression (Relay) Spring	1	266-5022-01
7	#10-32 Adj. Spindle Stop w/Rubber Tip	1	280-5014-00
	Item 7 is secured by: #10-32 Keps Nut (Qty. 1) (240-5208-00)		

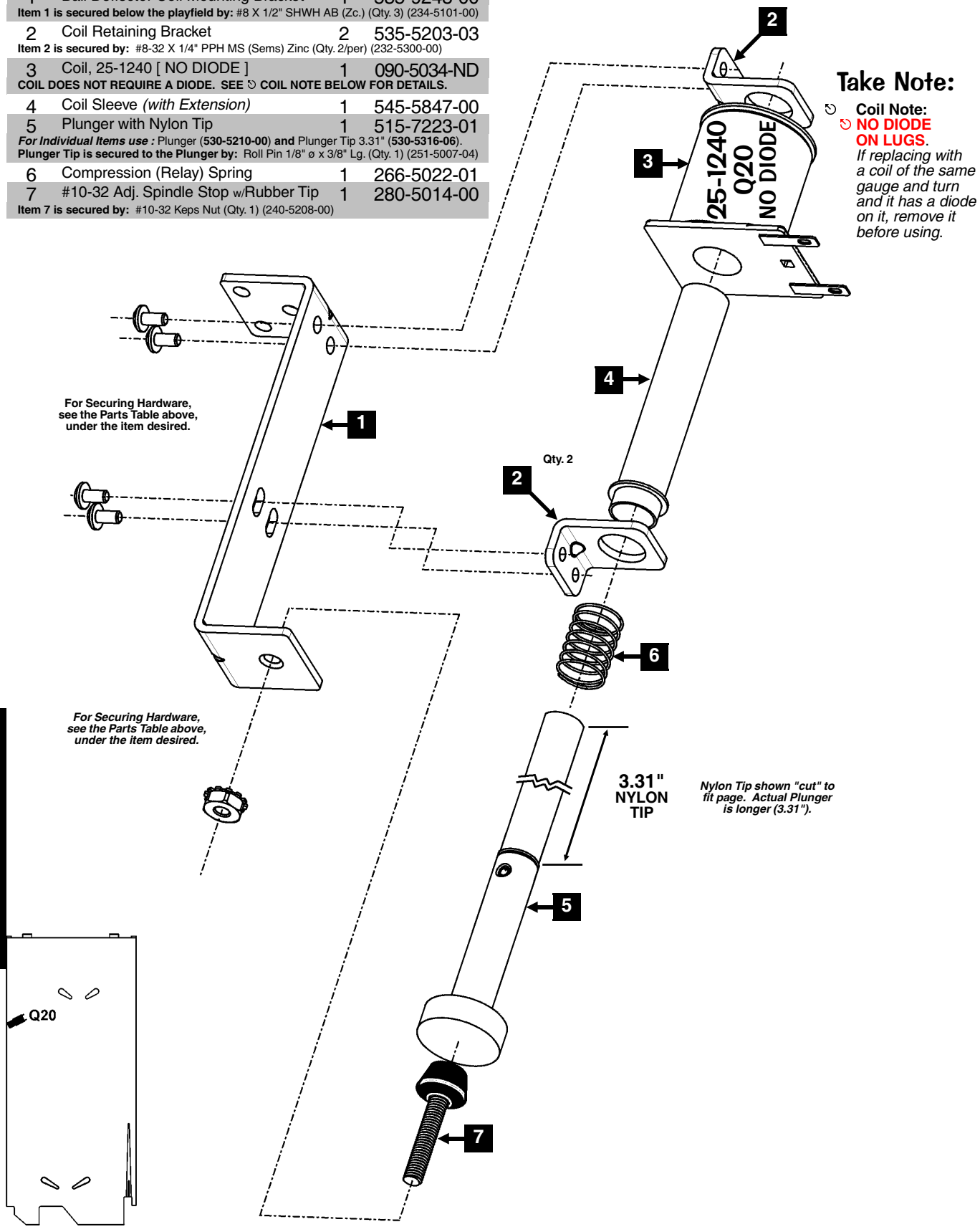

Take Note:

⏲ **Coil Note:**
⏲ **NO DIODE ON LUGS.**
If replacing with a coil of the same gauge and turn and it has a diode on it, remove it before using.

Sec. 4: Drawings ...

Reverse-O-Matic Ramp & Left Wire Ramp
Individual Parts Only (Items 1-5)

Nr.	LEFT RAMP PARTS	QTY.	SPI PART Nr.
1	Left Wire Ramp Weldment Asm.	1	515-7479-00
2	Wire Form (Top Gate)	1	535-9657-00
	(ASM. REF. 500-6973-00, Items 1-2 Only)		
3®	Reverse-O-Matic Steel Ramp Asm.	1	515-7481-00
	Item 3® is secured under the playfield by: #8 Washer (Qty. 5) (242-5005-00) **and** #8-32 Nylon Stop Nut (Qty. 5) (240-5102-00)		
	Reference Only : *Ramp Weldment No Parts (**515-7482-00**) **and** Ramp Flap (**535-9584-00**)* ***Secured by :*** *Rivet, 1/8" ø X 3/16" Lg. (Qty. 2) (249-5001-00) **and** Washer 9/64" I.D. X 5/16" O.D. X 1/32" (Qty. 2) (246-5000-00)*		
4	Transceiver OPTO PCB Assembly	2	500-6775-00
	Item 8 is secured to Item 1 by: #6 X 3/8" PPH (Zinc) Type -25 (Qty. 2/per) (237-5880-00)		
	(ASM. REF. 500-6908-00, Items 3®-4 Only)		
5	***Kit:* Decals** *(includes -18)*	1	802-5000-88
	Note: *Individual Decals (820-6370-XX) are not available individually, ordering of kit is required.*		

Take Note:

® "R" indicates Item noted is secured with rivet(s) as listed.

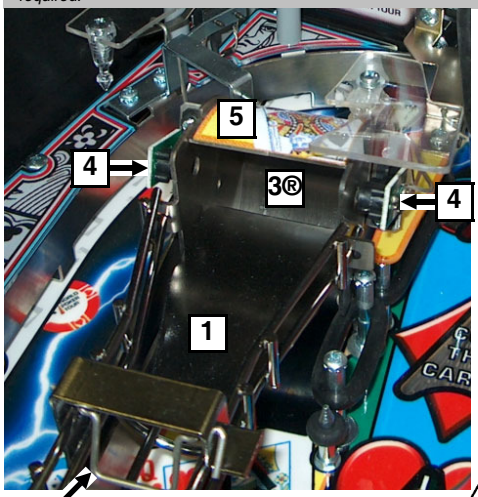

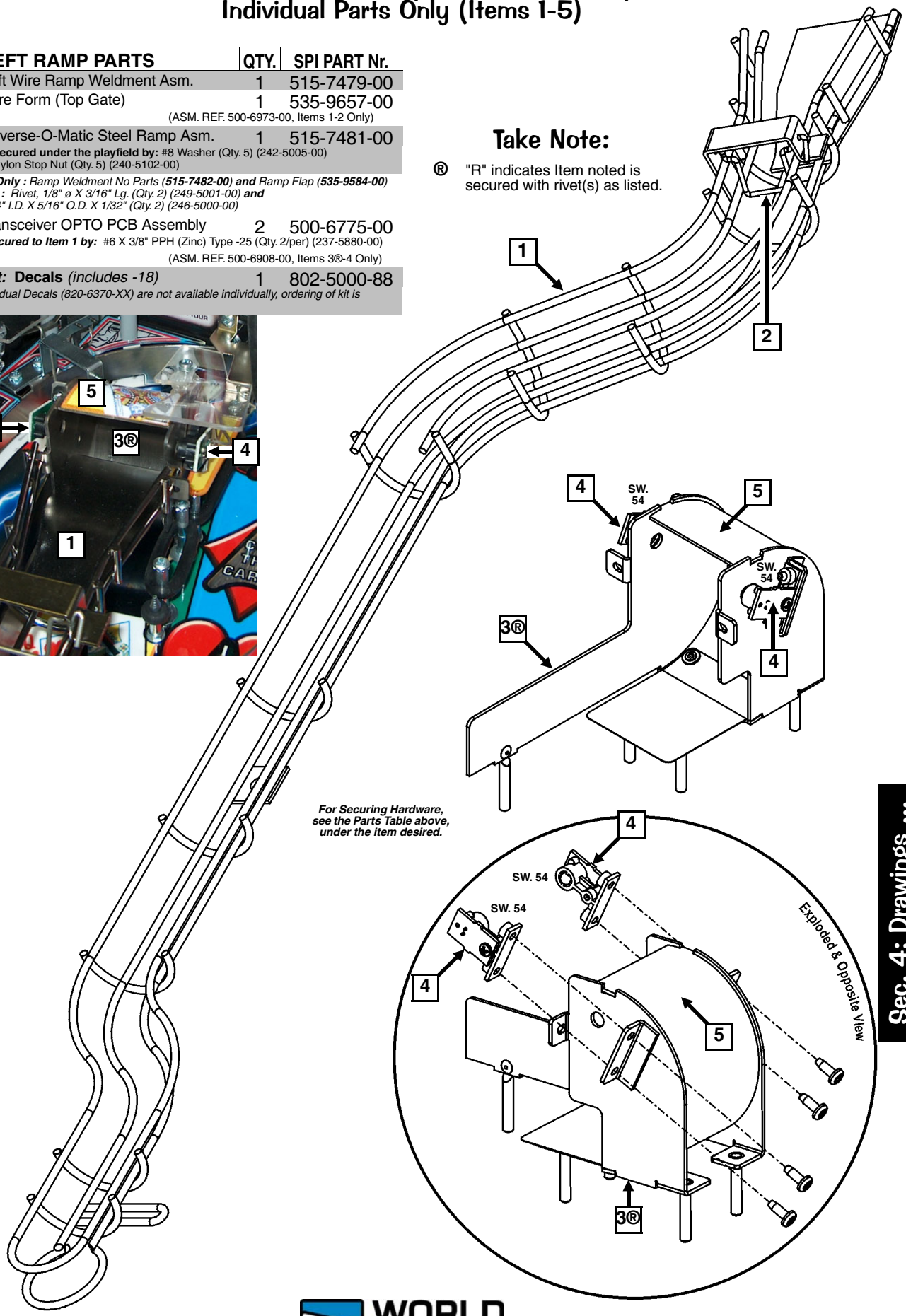

4-Bank Drop Target (Mid. & Right) Assemblies, 500-6946-04 (Qty. 2) (Items 1-14)

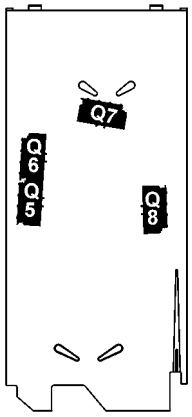

[Different Views & Parts Table on the next page.]

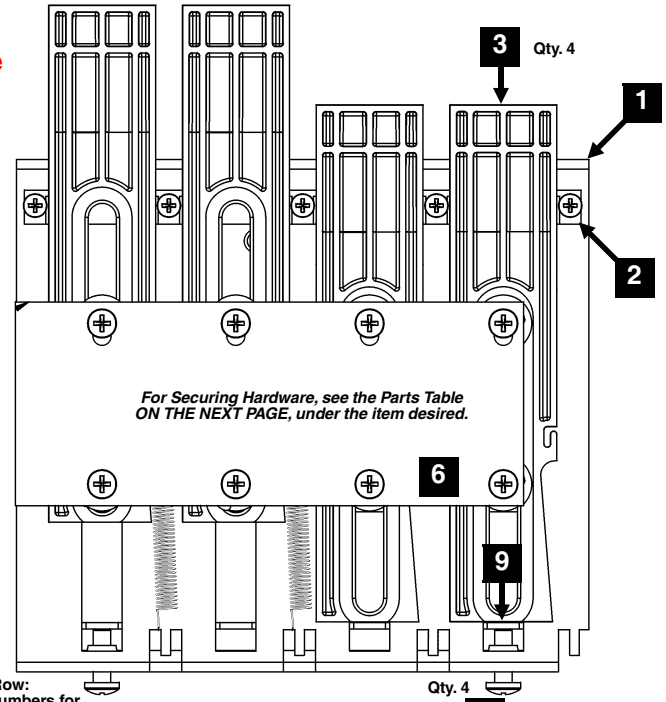

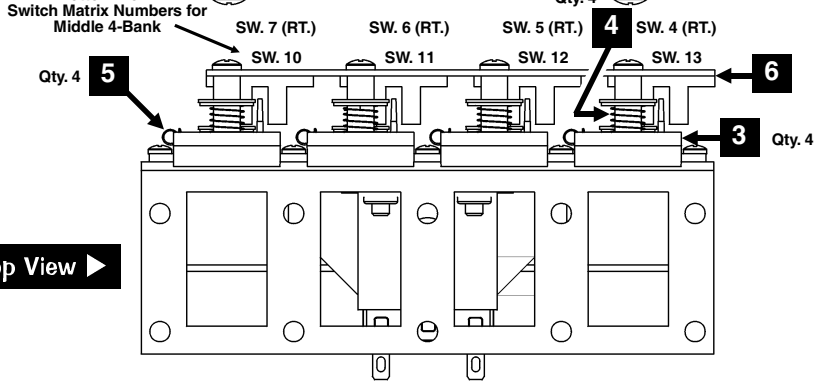

Top View ▶

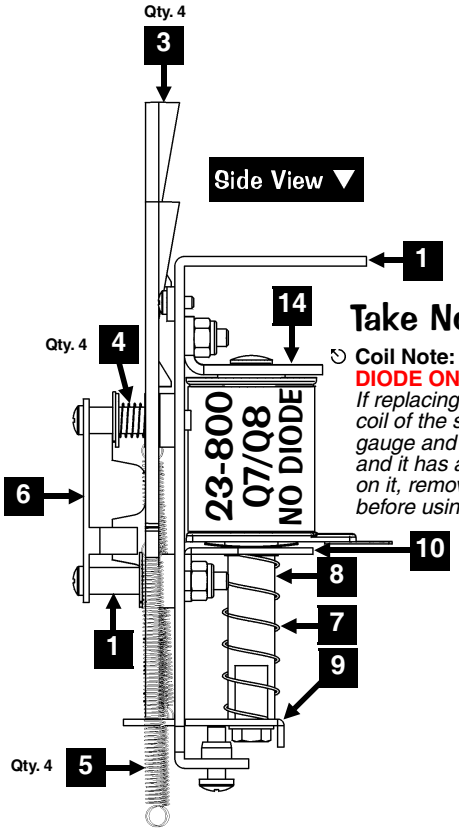

Take Note:

Coil Note: NO DIODE ON LUGS. *If replacing with a coil of the same gauge and turn and it has a diode on it, remove it before using.*

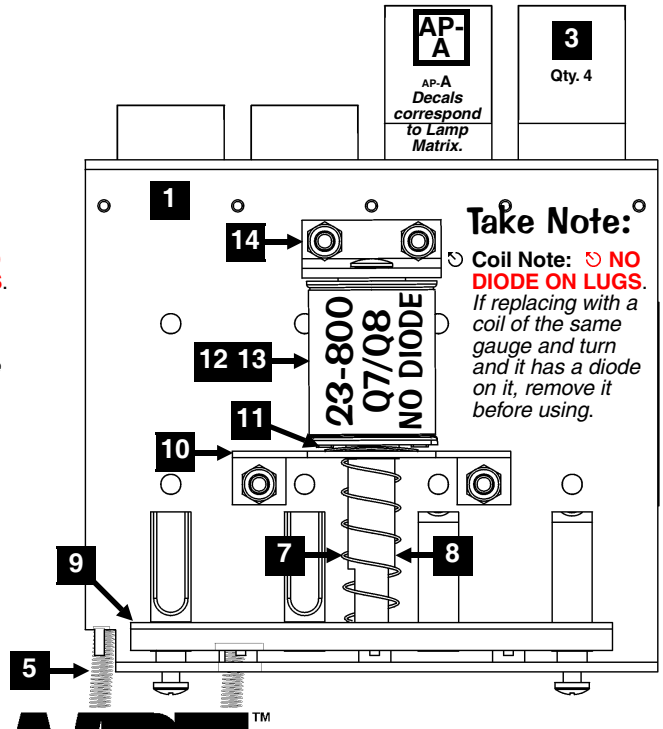

Take Note:

Coil Note: NO DIODE ON LUGS. *If replacing with a coil of the same gauge and turn and it has a diode on it, remove it before using.*

WPT™ WORLD POKER TOUR

4-Bank Drop Target (Mid. & Right) Asm., 500-6946-04 (Qty. 2) (Items 1-14) Cont.
and Associated Part: See Parts Table Below.

Nr.	4-BANK DROP TRGT. PARTS	QTY.	SPI PART Nr.
1	Frame & Pem Weldment, **4-Bank D/T**	1	515-7547-04-88
	Item 1 is secured under the playfield by: #8 X 1/2" SHWH AB (Zc.) (Qty. 6) (234-5101-00)		
2	Target Rest Ledge (Black), **4-Bank D/T**	1	545-6163-04
	Item 2 is secured to Item 1 by: #4-40 X 1/4" PPH MS (Zinc) (Qty. 5) (237-6169-00)		
3	Drop Target (Black Plastic) Rollover	4	545-6162-00
4	Compression (Short) Spring	4	266-5089-00
	Items 3 & 4 are secured to Item 1 @ top by: Washer, 1/2" X 17/64" X .03" (Qty. 2/per) (242-5091-00) **and** Retaining Ring, 1/4" ø (Qty. 1/per) (270-5002-00)		
	FRAME PEM —> WASHER —> SPRING —> WASHER —> RETAINING RING —> OPTO PCB —> SCREW		
	Item 3 is secured to Item 1 @ bottom by: Washer, 1/2" X 17/64" X .03" (Qty. 1/per) (242-5091-00) **and** Retaining Ring, 1/4" ø (Qty. 1/per) (270-5002-00)		
5	Reset (Long) Spring (Red Dipped)	4	265-5003-02
6	PCB, Slotted OPTO X4	1	520-5252-04
	Item 6 is secured to Item 1 by: #6-32 X 3/8" PPH MS (Zinc) (Qty. 8/per) (237-5501-00)		
	*Wiring Harness (**036-5507-20-88 Middle; 036-5507-21-88 Right**).*		
7	Compression (Return) Spring	1	266-5020-00
8	Steel Plunger	1	530-5719-00

Nr.	4-BANK DROP TRGT. PARTS	QTY.	SPI PART Nr.
9	Target Lift (4-Bank) Bracket	1	535-9760-04
	Item 9 is secured to Item 8 Plunger by: #10-32 X 1/2" HWH (NO SLOT) (Zinc) (Qty. 1) (237-5995-00) **TARGET HEIGHT ADJUSTMENT:**		
	Item 9 is adjusted through Item 1 by: #8-32 X 1/2" PPH MS (Zinc) (Qty. 2) (237-5602-00)		
10	Coil Mounting Bracket	1	535-9761-00
	Item 10 is secured to Item 1 by: #8-32 Nylon Stop Nut (Qty. 2) (240-5102-00)		
11	Spring Washer (17/32" ID X 3/4" X 1")	1	269-5002-00
12	Coil, 23-800 [NO DIODE]	1	090-5001-ND
	COIL DOES NOT REQUIRE A DIODE. SEE ⟲ COIL NOTE ABOVE FOR DETAILS.		
13	Coil Sleeve (1.69 OAL)	1	545-5411-00
14	Bracket, Plunger Stop	1	515-7548-00
	Item 14 is secured to Item 1 by: #8-32 Nylon Stop Nut (Qty. 2) (240-5102-00)		

ASSOCIATED PARTS **ARE NOT INCLUDED** WITH THE ABOVE ASSEMBLY.

Nr.	ASSOCIATED PART(S)	QTY.	SPI PART Nr.
AP-A	***Kit:* Decals** *(incl. all Drop Targets)*	1	802-5000-88

Note: *Individual Decals (820-6370-XX) are not available individually, ordering of kit is required.*

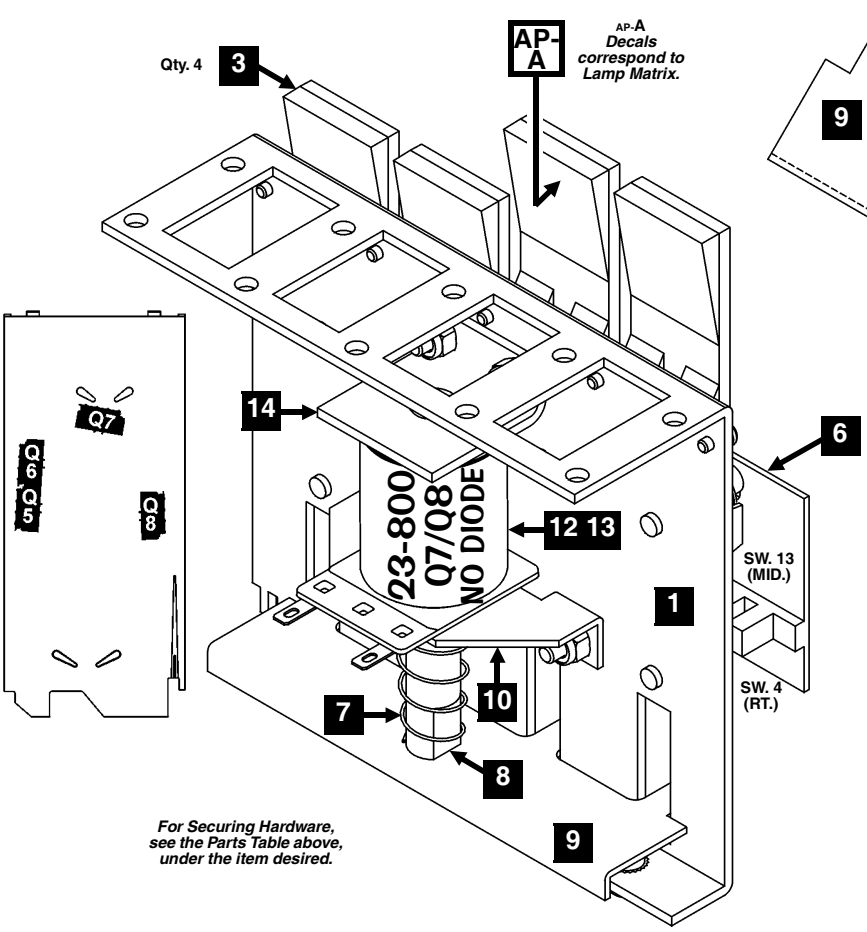

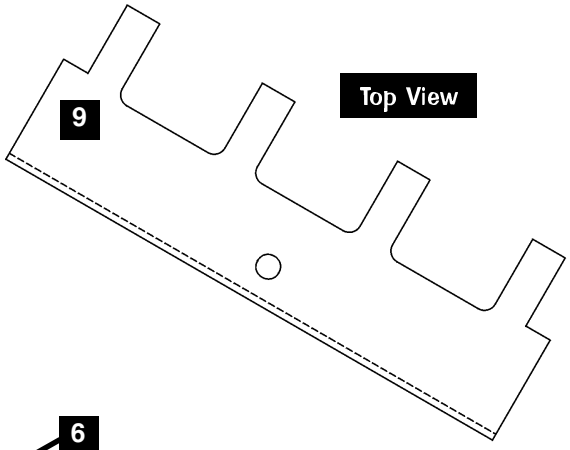

Take Note:

⟲ **Coil Note: ⟲ NO DIODE ON LUGS**. *If replacing with a coil of the same gauge and turn and it has a diode on it, remove it before using.*

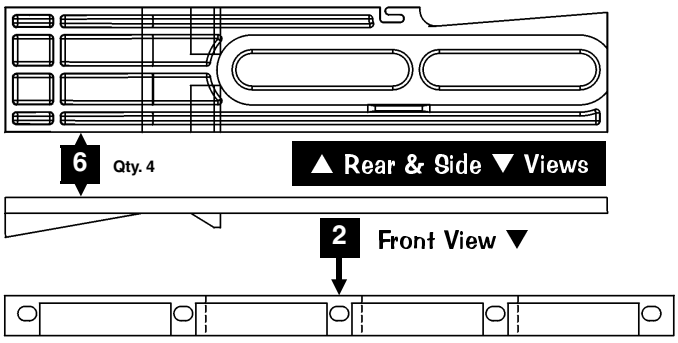

Sec. 4: Drawings ...

4- or 8- Bank Drop Target (500-6946-04 or -08)
Coil Side Disassembly Procedure (4-Bank Drop Target Shown)

Technicians Remember the Basics: *All Service should be done by qualified personnel.* ***ALWAYS REMOVE POWER BEFORE SERVICING****. Service assemblies which are below the playfield, with the playfield in its' most upright position (leaning against the Backbox). Raise it carefully! Ensure the bottom edge (back) of the playfield is still resting on the Cabinet Side Support Rails and is forward enough to allow the Playfield to lean against the backbox at an angle so it does not fall forward.* ***When lowering, rest on the support brackets first, then continue to place in cabinet.*** *Re-assembly is the reverse of disassembly (removal). Keep track of securing hardware (which are referenced under the items in the Parts Table) Use* ***Loctite Blue 242*** *on the threads of all screws to ensure the screws will not loosen in play. When in doubt, give us a call!*

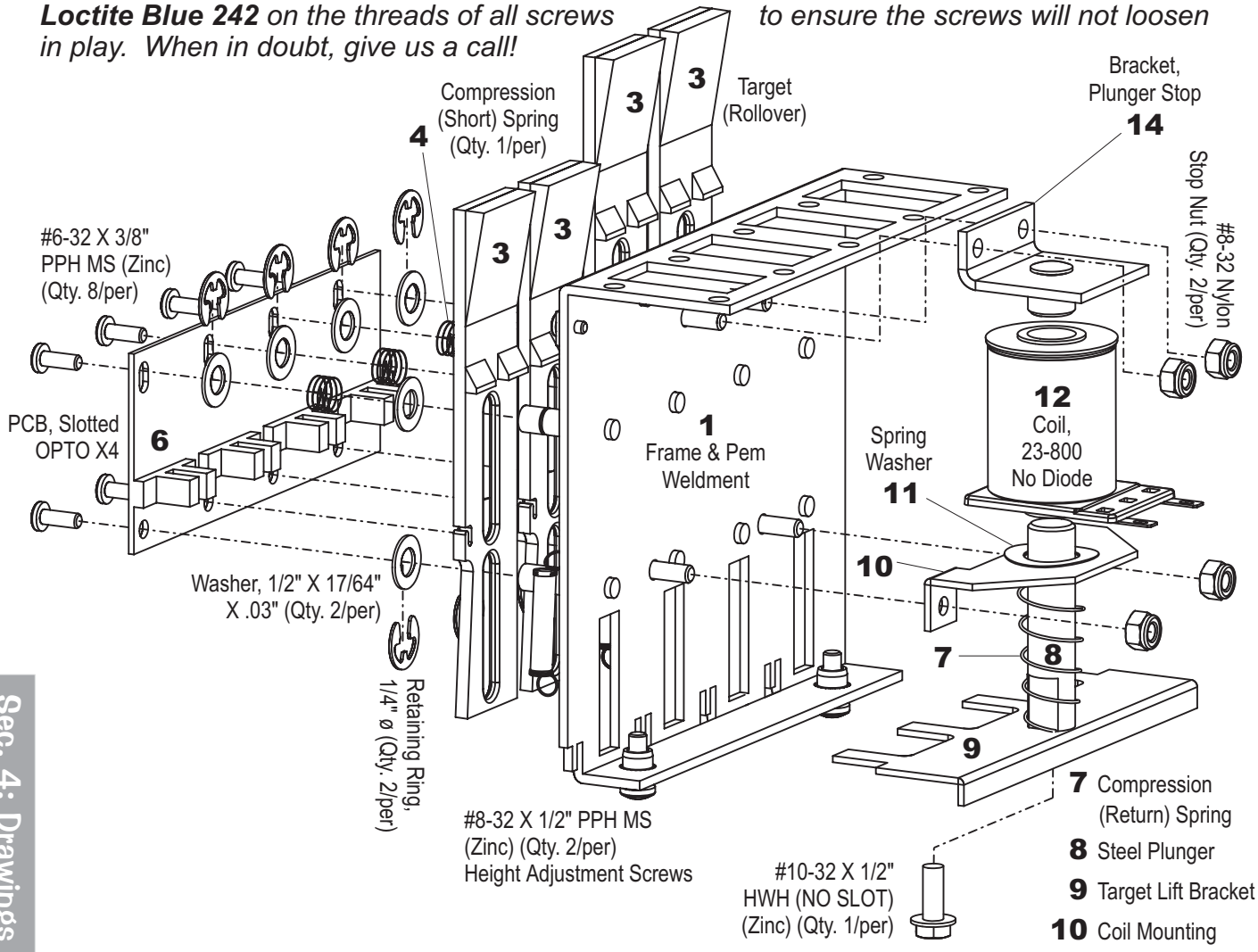

COIL AND/OR PLUNGER-LIFT BRACKET REMOVAL:

Note: *Assembly need not be removed from the playfield to perform this procedure.*

1. Remove the #8-32 Nylon Stop Nuts securing the Coil Mounting Bracket (**10**) and Plunger Stop Bracket (**14**) from the Frame & Pem Weldment (**1**).
2. Coil (**12**) can now be removed. Desolder the wiring taking note which color wire goes to either lug.
3. When reassembling, ensure the Spring Washer (**11**) is in place under the Coil (**12**) and over the Coil Mounting Bracket (**10**). Retighten (check) the #10-32 X 1/2" Screw which secures the Target Lift Bracket (**9**) to the Plunger (**8**).

4- or 8- Bank Drop Target (500-6946-04 or -08)
Target & PCB Side Disassembly Procedure (4-Bank Drop Target Shown)

Technicians Remember the Basics: *All Service should be done by qualified personnel.* ***ALWAYS REMOVE POWER BEFORE SERVICING****. Service assemblies which are below the playfield, with the playfield in its' most upright position (leaning against the Backbox). Raise it carefully! Ensure the bottom edge (back) of the playfield is still resting on the Cabinet Side Support Rails and is forward enough to allow the Playfield to lean against the backbox at an angle so it does not fall forward.* ***When lowering, rest on the support brackets first, then continue to place in cabinet.*** *Re-assembly is the reverse of disassembly (removal). Keep track of securing hardware (which are referenced under the items in the Parts Table) Use* ***Loctite Blue 242*** *on the threads of all screws to ensure the screws will not loosen in play. When in doubt, give us a call!*

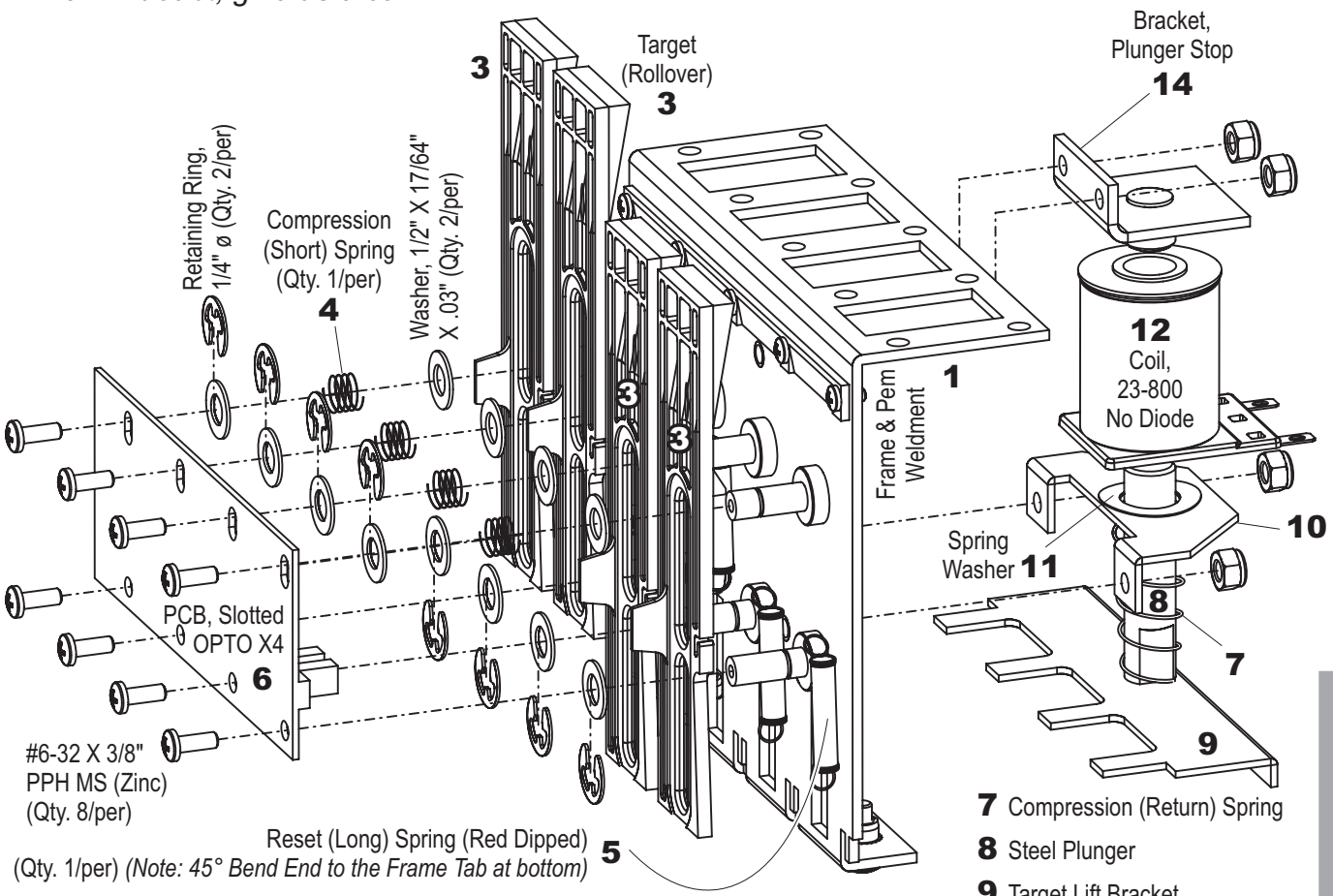

TARGET AND SPRING REMOVAL:

Note: *Assembly need not be removed from the playfield to perform this procedure. When replacing the target, perform the below steps on one target at a time.*

1. Remove the #6-32 x 3/8" PPH MS Screws securing the PCB, Slotted OPTO (**6**) from the Frame & Pem Weldment (**1**).
2. Remove the top Retaining Ring, 1/4" ø and Washer and set aside the Compression (Short) Spring (**4**) and second washer. Remove the bottom Retaining Ring and Washer. Unhook the Reset Spring (**5**).
3. The Target (**3**) can now be removed. When reassembling, note the other targets. The Compression Spring (**4**) is at the top between the two washers, secure with the Retaing Ring. When replacing the Reset (Long) Spring (**5**), hook one end to the target tab and the other **45° end** to the tab on the Frame (**1**).

8-Bank Drop Target (Left) Assembly, 500-6946-08 (Items 1-14)

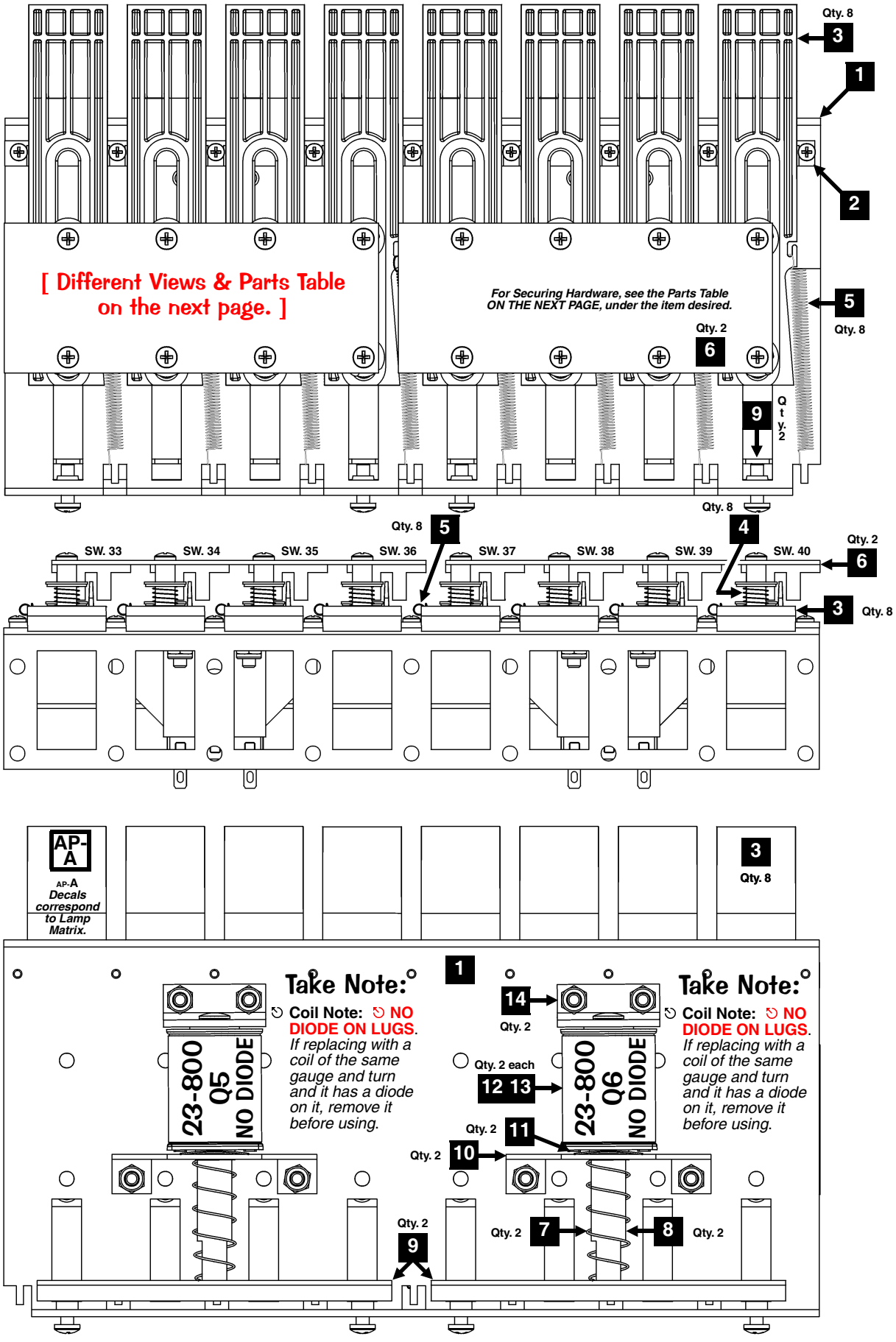

Sec. 4: Drawings ...

8-Bank Drop Target (Left) Assembly, 500-6946-08 (Items 1-14) Continued
and Associated Part: See Parts Table Below.

Nr.	8-BANK DROP TRGT. PARTS	QTY.	SPI PART Nr.
1	Frame & Pem Weldment, **8-Bank D/T**	1	515-7547-08-88
	Item 1 is secured under the playfield by: #8 X 1/2" SHWH AB (Zc.) (Qty. 8) (234-5101-00)		
2	Target Rest Ledge (Black), **8-Bank D/T**	1	545-6163-08
	Item 2 is secured to Item 1 by: #4-40 X 1/4" PPH MS (Zinc) (Qty. 9) (237-6169-00)		
3	Drop Target (Black Plastic) Rollover	8	545-6162-00
4	Compression (Short) Spring	8	266-5089-00
	Items 3 & 4 are secured to Item 1 @ top by: Washer, 1/2" X 17/64" X .03" (Qty. 2/per) (242-5091-00) **and** Retaining Ring, 1/4" ø (Qty. 1/per) (270-5002-00)		
	FRAME PEM —> WASHER —> SPRING —> WASHER —> RETAINING RING —> OPTO PCB —> SCREW		
	Item 3 is secured to Item 1 @ bottom by: Washer, 1/2" X 17/64" X .03" (Qty. 1/per) (242-5091-00) **and** Retaining Ring, 1/4" ø (Qty. 1/per) (270-5002-00)		
5	Reset (Long) Spring (Red Dipped)	8	265-5003-02
6	PCB, Slotted OPTO X4	2	520-5252-04
	Item 6 is secured to Item 1 by: #6-32 X 3/8" PPH MS (Zinc) (Qty. 8/per) (237-5501-00)		
	*Wiring Harness (**036-5507-19-88**) dressed with 1/4" Clamp (**040-5000-03**) and 1/2" Clamp (**040-5000-06**) using corner screw of each PCB.*		
7	Compression (Return) Spring	2	266-5020-00
8	Steel Plunger	2	530-5719-00

Nr.	8-BANK DROP TRGT. PARTS	QTY.	SPI PART Nr.
9	Target Lift (4-Bank) Bracket	2	535-9760-04
	Item 9 is secured to Item 8 Plunger by: #10-32 X 1/2" HWH (NO SLOT) (Zinc) (Qty. 1/per) (237-5995-00) **TARGET HEIGHT ADJUSTMENT:**		
	Item 9 is adjusted through Item 1 by: #8-32 X 1/2" PPH MS (Zinc) (Qty. 4) (237-5602-00)		
10	Coil Mounting Bracket	2	535-9761-00
	Item 10 is secured to Item 1 by: #8-32 Nylon Stop Nut (Qty. 2/per) (240-5102-00)		
11	Spring Washer (17/32" ID X 3/4" X 1")	2	269-5002-00
12	Coil, 23-800 [NO DIODE]	2	090-5001-ND
	COIL DOES NOT REQUIRE A DIODE. SEE ⟲ COIL NOTE ABOVE FOR DETAILS.		
13	Coil Sleeve (1.69 OAL)	2	545-5411-00
14	Bracket, Plunger Stop	2	515-7548-00
	Item 14 is secured to Item 1 by: #8-32 Nylon Stop Nut (Qty. 2/per) (240-5102-00)		

ASSOCIATED PARTS **ARE NOT INCLUDED** WITH THE ABOVE ASSEMBLY.

Nr.	ASSOCIATED PART(S)	QTY.	SPI PART Nr.
AP-A	***Kit:* Decals** *(incl. all Drop Targets)*	1	802-5000-88

Note: *Individual Decals (820-6370-XX) are not available individually, ordering of kit is required.*

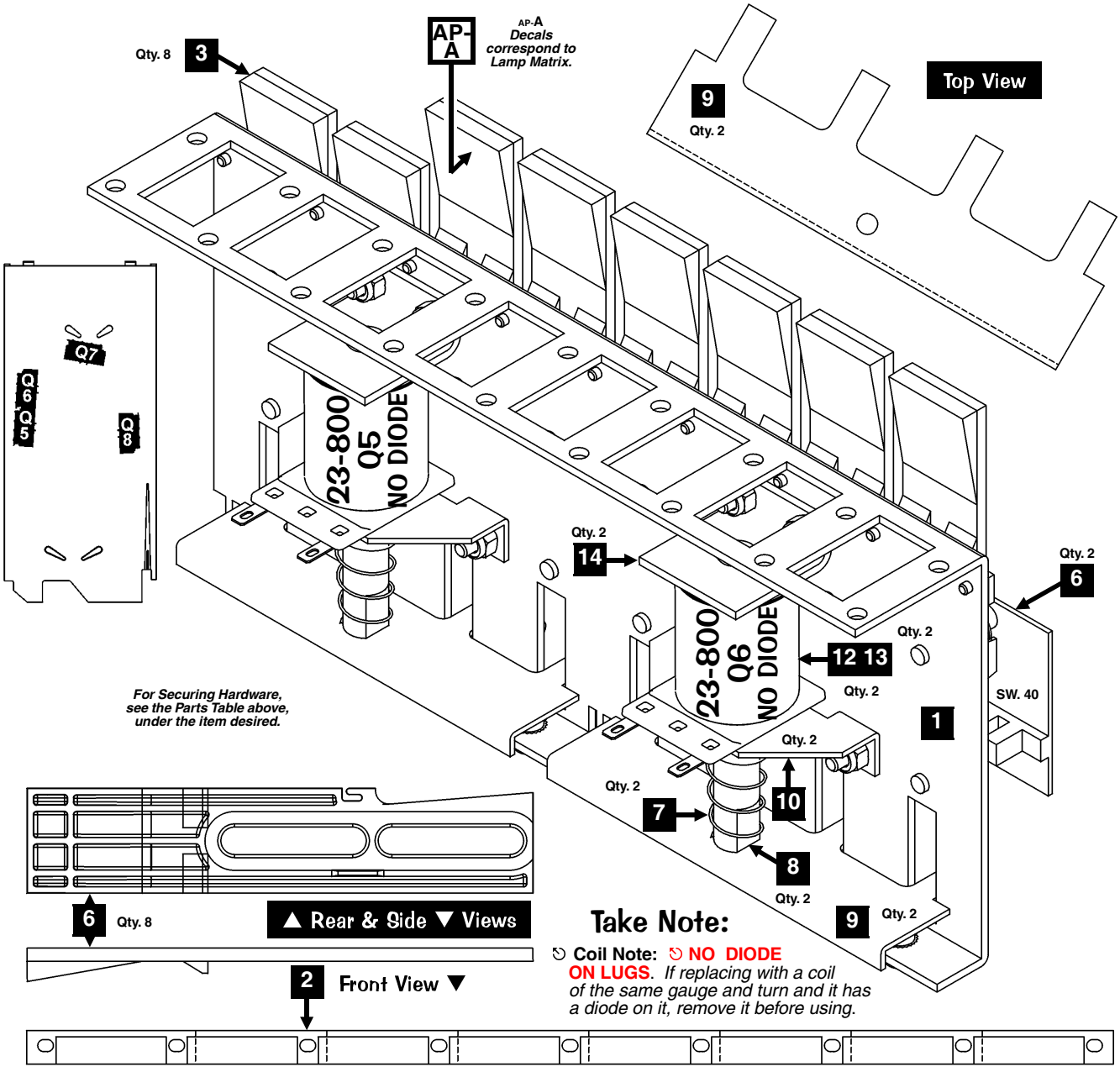

Take Note:

⟲ **Coil Note:** ⟲ **NO DIODE ON LUGS**. *If replacing with a coil of the same gauge and turn and it has a diode on it, remove it before using.*

Sec. 4: Drawings ...

Back Panel
Individual Parts Only (Items 1-27)

[Different Views & Parts Table (Items 13-27) continued on the next page.]

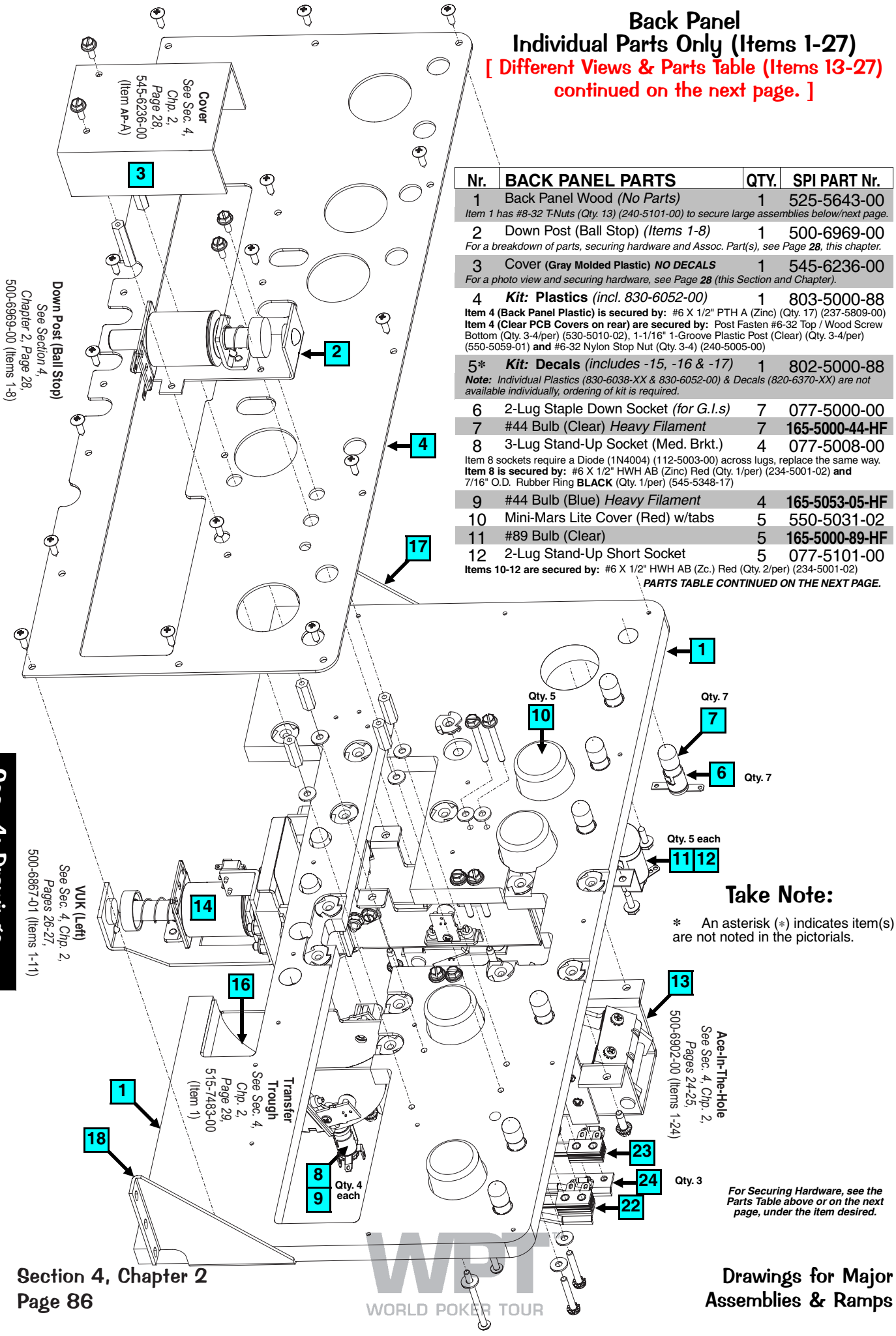

Nr.	BACK PANEL PARTS	QTY.	SPI PART Nr.
1	Back Panel Wood *(No Parts)*	1	525-5643-00
	Item 1 has #8-32 T-Nuts (Qty. 13) (240-5101-00) to secure large assemblies below/next page.		
2	Down Post (Ball Stop) *(Items 1-8)*	1	500-6969-00
	*For a breakdown of parts, securing hardware and Assoc. Part(s), see Page **28**, this chapter.*		
3	Cover **(Gray Molded Plastic)** ***NO DECALS***	1	545-6236-00
	*For a photo view and securing hardware, see Page **28** (this Section and Chapter).*		
4	***Kit:* Plastics** *(incl. 830-6052-00)*	1	803-5000-88
	Item 4 (Back Panel Plastic) is secured by: #6 X 1/2" PTH A (Zinc) (Qty. 17) (237-5809-00) **Item 4 (Clear PCB Covers on rear) are secured by:** Post Fasten #6-32 Top / Wood Screw Bottom (Qty. 3-4/per) (530-5010-02), 1-1/16" 1-Groove Plastic Post (Clear) (Qty. 3-4/per) (550-5059-01) **and** #6-32 Nylon Stop Nut (Qty. 3-4) (240-5005-00)		
5*	***Kit:* Decals** *(includes -15, -16 & -17)*	1	802-5000-88
	***Note:** Individual Plastics (830-6038-XX & 830-6052-00) & Decals (820-6370-XX) are not available individually, ordering of kit is required.*		
6	2-Lug Staple Down Socket *(for G.I.s)*	7	077-5000-00
7	#44 Bulb (Clear) *Heavy Filament*	7	**165-5000-44-HF**
8	3-Lug Stand-Up Socket (Med. Brkt.)	4	077-5008-00
	Item 8 sockets require a Diode (1N4004) (112-5003-00) across lugs, replace the same way. **Item 8 is secured by:** #6 X 1/2" HWH AB (Zinc) Red (Qty. 1/per) (234-5001-02) **and** 7/16" O.D. Rubber Ring **BLACK** (Qty. 1/per) (545-5348-17)		
9	#44 Bulb (Blue) *Heavy Filament*	4	**165-5053-05-HF**
10	Mini-Mars Lite Cover (Red) w/tabs	5	550-5031-02
11	#89 Bulb (Clear)	5	**165-5000-89-HF**
12	2-Lug Stand-Up Short Socket	5	077-5101-00
	Items 10-12 are secured by: #6 X 1/2" HWH AB (Zc.) Red (Qty. 2/per) (234-5001-02)		

PARTS TABLE CONTINUED ON THE NEXT PAGE.

Take Note:

* An asterisk (*) indicates item(s) are not noted in the pictorials.

For Securing Hardware, see the Parts Table above or on the next page, under the item desired.

WPT
WORLD POKER TOUR

Back Panel Individual Parts Only (Items 1-27) Continued

Nr.	BACK PANEL PARTS	QTY.	SPI PART Nr.
13	Ace-In-The-Hole Asm. *(Items 1-24)*	1	500-6902-00
	*For a breakdown of parts, securing hardware and Assoc. Part(s), see Pages **24-25**, this chp.*		
14	VUK (Left) Assembly *(Items 1-11)*	1	500-6867-01
15	VUK Tube Weldment Asm. *(Items 12-20)*	1	***Ind. Parts Only***
	*For a breakdown of parts, securing hardware and Assoc. Part(s), see Pages **26-27**, this chp.*		
16	Transfer Trough & OPTOs *(Items 1-2)*	1	***Ind. Parts Only***
	*For a breakdown of parts, securing hardware and Assoc. Part(s), see Page **29**, this chapter.*		
17	Stiffener Bracket Left	1	535-9792-01
18	Stiffener Bracket Right	1	535-9792-00
	Items 17-18 are secured to Item 1 (Back Panel) and above the playfield by: #8 X 1/2" SHWH AB (Zinc) (Qty. 6/per) (234-5101-00)		
19	Guard Bracket (3.38" X 1" X 2.5" Ht.)	1	535-9800-05
20	Guard Bracket (8.25" X 1" X 2.5" Ht.)	1	535-9800-02
	Items 19-20 are secured by: #8 X 1/2" SHWH AB (Zc.) (Qty. 4) (234-5101-00)		
21	White S-U Target, 1" Sq. Lugs Left	1	515-7497-08-00
22	Wht. Stand-Up Target, 1" Sq. Lugs Rt.	1	515-7497-08-01
23	Wht. Stand-Up Target, Rect. Lugs Rt.	1	515-7498-08-01
24	Switch Back Plate	3	535-6452-00
	Items 21-24 are secured by: #6-32 X 1-1/4" HWH Swage (Ser) (Zinc) (Qty. 2/per) (237-5976-08) **and** #6 Washer (Qty. 2/per) (242-5001-00)		
25	Foam Pads *(affixed behind target)*	3	626-5029-00
26	OPTO Amplifier PCB with Spacers	2	**520-5239-01-ASY**
	Item 26 is secured to Item 1 by: #6 X 7/8" PPH AB (Zinc) (Qty. 4/per) (237-5003-00)		
27*	1/2" Clamp (Single) *Not Shown*	4	040-5000-06
	Item 27 is secured by: #6 X 1/2" HWH AB (Zinc) Red (Qty. 1/per) (234-5001-02)		

Take Note:

* An asterisk (*) indicates item(s) are not noted in the pictorials.

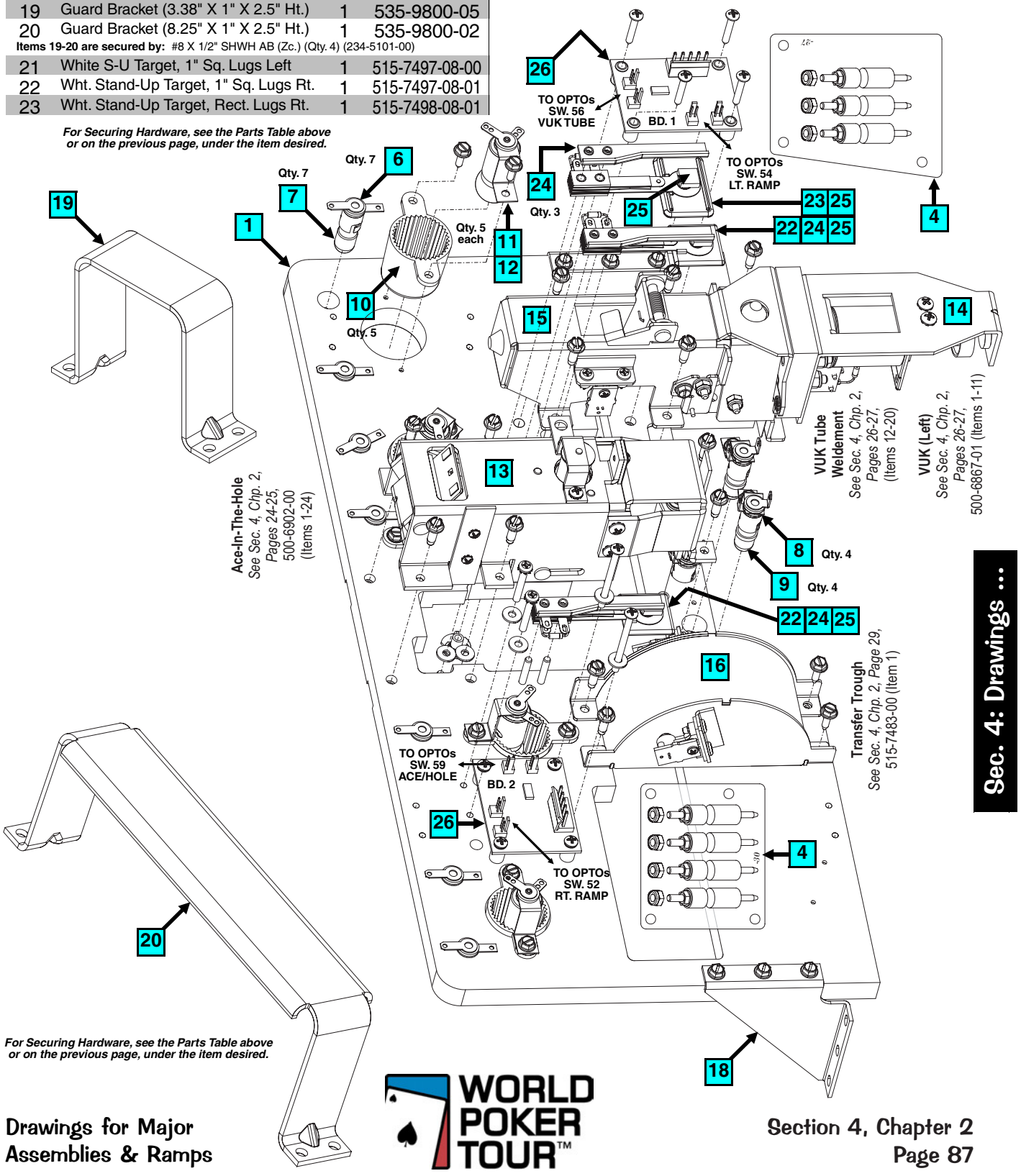

Ace-In-The-Hole Assembly (located on the Back Panel), 500-6902-00 (Items 1-24)

Ball can be locked inside this mechanism with the required hits against the bars.

[Different Views & Parts Table on the next page.]

a.k.a. Mouse Trap Assembly

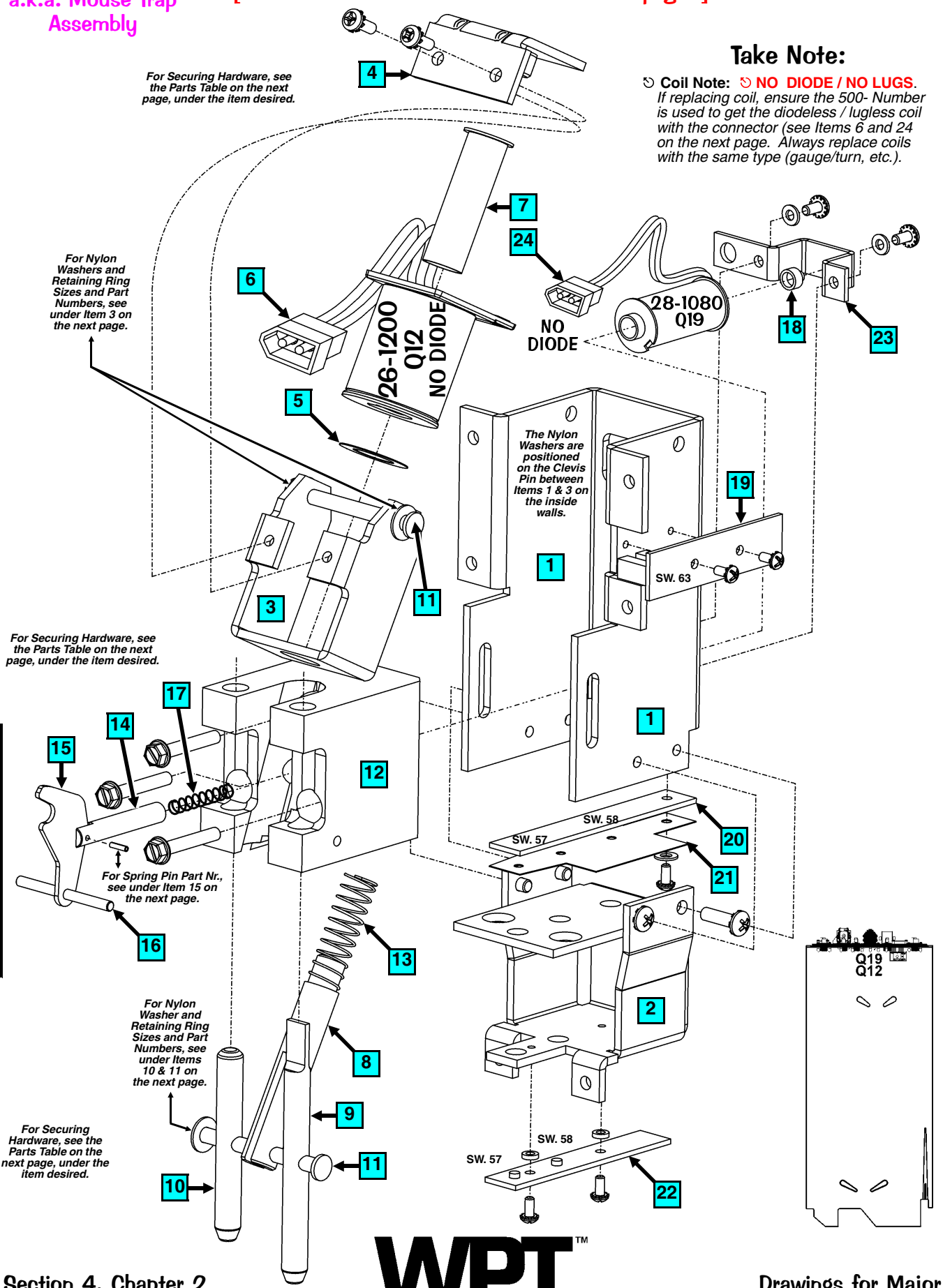

Take Note:

Coil Note: **NO DIODE / NO LUGS.**
If replacing coil, ensure the 500- Number is used to get the diodeless / lugless coil with the connector (see Items 6 and 24 on the next page. Always replace coils with the same type (gauge/turn, etc.).

Ace-In-The-Hole Assembly (... Back Panel), 500-6902-00 (Items 1-24) Continued

Ball can be locked inside this mechanism with the required hits against the bars.

Nr.	ACE-IN-THE-HOLE PARTS	QTY.	SPI PART Nr.
1	Housing Top Bracket (A-I-T-H)	1	535-9659-00
	Item 1 is secured to the Back Panel by: #8 X 1/2" SHWH AB (Zc.) (Qty. 4) (234-5101-00)		
2	Housing Bottom Bracket (A-I-T-H)	1	535-9663-00
	Item 2 is secured to the Back Panel by: #8 X 1/2" SHWH AB (Zc.) (Qty. 2) (234-5101-00) **and is secured to Item 1 by:** #8-32 x 1/4" PPH MS Ext. Sems (Zinc) (Qty. 4) (232-5300-00)		
3	Coil Holder Bracket	1	535-9660-00
	Item 3 is secured with Item 11 (Clevis Pin) and: Nylon Washer (Qty. 2) (242-5088-00) (Mfg. Ref. MMC 90295A120) ***Asm. Note:*** *1 Nylon Washer between Items 3 & 1 (each side).*		
4	Coil Retaining Bracket Assembly	1	515-7489-00
	Item 4 is secured to Item 3 by: #6-32 X 3/8" PPH Sems (Zinc) (Qty. 2) (232-5201-00)		
5	Spring Washer (17/32" ID X 3/4" X 1")	1	269-5002-00
6	Coil, 26-1200 [NO DIODE, w/CONN.]	1	500-6976-00
	COIL DOES NOT REQUIRE A DIODE. SEE ⍉ COIL NOTE BELOW FOR DETAILS. **COIL HAS 6" LEADS. TO ORDER COIL WITHOUT CONNECTOR USE 090-5044-ND-NL.**		
7	Coil Sleeve	1	545-5031-00
8	Plunger (with hole for Clevis Pin)	1	530-5703-00
9	Bar Shaft (Long with flat)	1	530-5700-00
10	Bar Shaft (Short)		530-5700-01
	Items 8-10 are secured with Item 11, Grooved Clevis Pin (below) and: Nylon Washer .195" I.D. x .437" O.D. X .03" (Qty. 1) (242-5088-00) (Mfg. Ref. MMC 90295A120) ***Assembly Note:*** *Place 1 Nylon Washer under Retaining Ring (see Item 5).*		
11	Grooved Clevis Pin 2" X 3/16" ø	2	530-5702-00
	Item 11 is secured by: Retaining Ring, 5/32" ø (Qty. 1/per) (270-5025-00) (Mfg. Ref. MMC 92735A160)		

Nr.	ACE-IN-THE-HOLE PARTS	QTY.	SPI PART Nr.
12	Bar Shaft Support Block (Nylon)	1	545-6234-00
	Item 12 is secured to Item 1 by: #8-32 X 1" SHWH MS (Zinc) (Qty. 3) (237-6003-00)		
13	Compression (Return) Spring, Large	1	266-5086-03
14	Plunger (for Lock)	1	530-5701-00
15	Latch (secured to Item 13 Plunger)	1	535-9661-00
	Items 14-15 are secured pivot by: Spring Pin (251-5023-00) (Mfg. Ref. MMC 92383A102)		
16	Dowl Pin 1.5" X 1/8" ø (thru Item 14)	1	251-5024-00
	(Mfg. Ref. MMC 98380A479)		
17	Compression (Return) Spring, Small	1	266-5086-01
18	Lock Spring Seat	1	545-6235-00
19	OPTO ('U') Interuptor PCB	1	520-5251-00
	Item 19 is secured to Item 1 by: #4-40 X 1/4 PPH MS Sems (Zc.) (Qty. 2) (237-5909-00)		
20	OPTO Transceiver PCB (Top)	1	520-5247-00
21	Fiche Insulator Paper (for Item 20)	1	545-6173-00
	Items 20-21 are secured to Item 1 by: #4-40 X 1/4" PPH MS Ext. Sems (Zinc) (Qty. 1) (237-5909-00) **and** Washer 9/64" I.D. X 5/16" O.D. X 1/32" (Qty. 1) (242-5017-00)		
22	OPTO Receiver PCB (Bottom)	1	520-5248-00
	Item 22 is secured to Item 2 by: #4-40 X 1/4" PPH MS Ext. Sems (Zinc) (Qty. 2) (237-5909-00) **and** #4 Nylon Washer .109" I.D. X .21" O.D. X .052" (Qty. 2) (242-5092-00)		
23	Mini-Coil Retaining Bracket	1	535-9662-00
	Item 24 is secured to Item 1 by: #6-32 X 1/4" PPH MS Ext. Sems (Zinc) (Qty. 2) (232-5200-00) **and** #6 Washer (Qty. 2) (242-5001-00)		
24	Mini-Coil, 27-880 [NO DIODE w/CONN.]	1	500-6976-01
	COIL DOES NOT REQUIRE A DIODE. SEE ⍉ COIL NOTE BELOW FOR DETAILS. **COIL HAS 6" LEADS.** **REF. ONLY 090-5072-05.**		

◀ Front & Rear ▶ Views

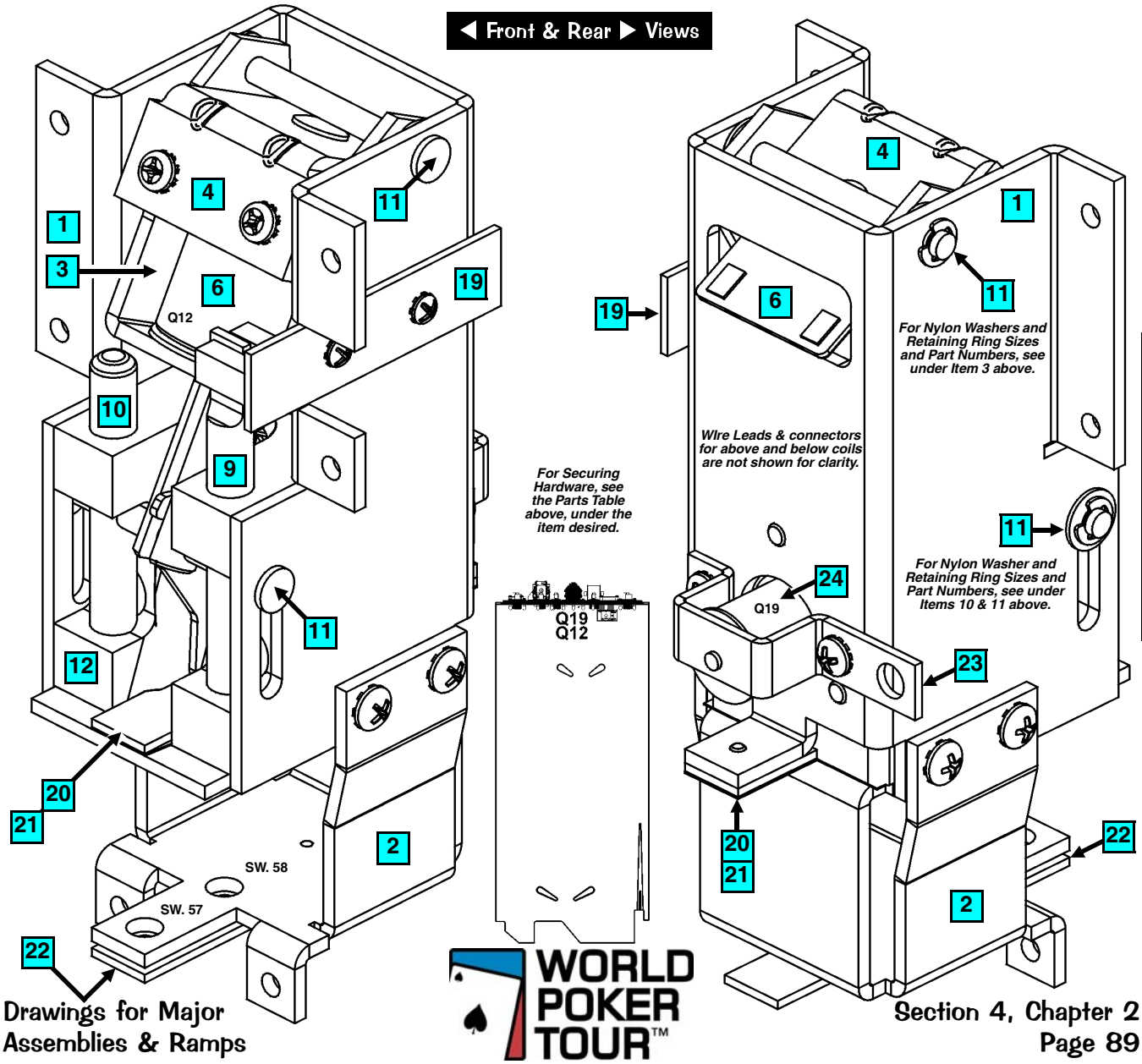

Sec. 4: Drawings ...

VUK (Left) Assembly (located on the Back Panel), 500-6867-01 (Items 1-11) and VUK Tube Weldment Assembly (... Back Panel), Individual Parts Only (Items 12-20)

Ball is transferred from the lower playfield to the upper playfield when it enters this mechanism.

[Different Views & Parts Table on the next page.]

For Securing Hardware, see the Parts Table on the next page, under the item desired.

Rear View

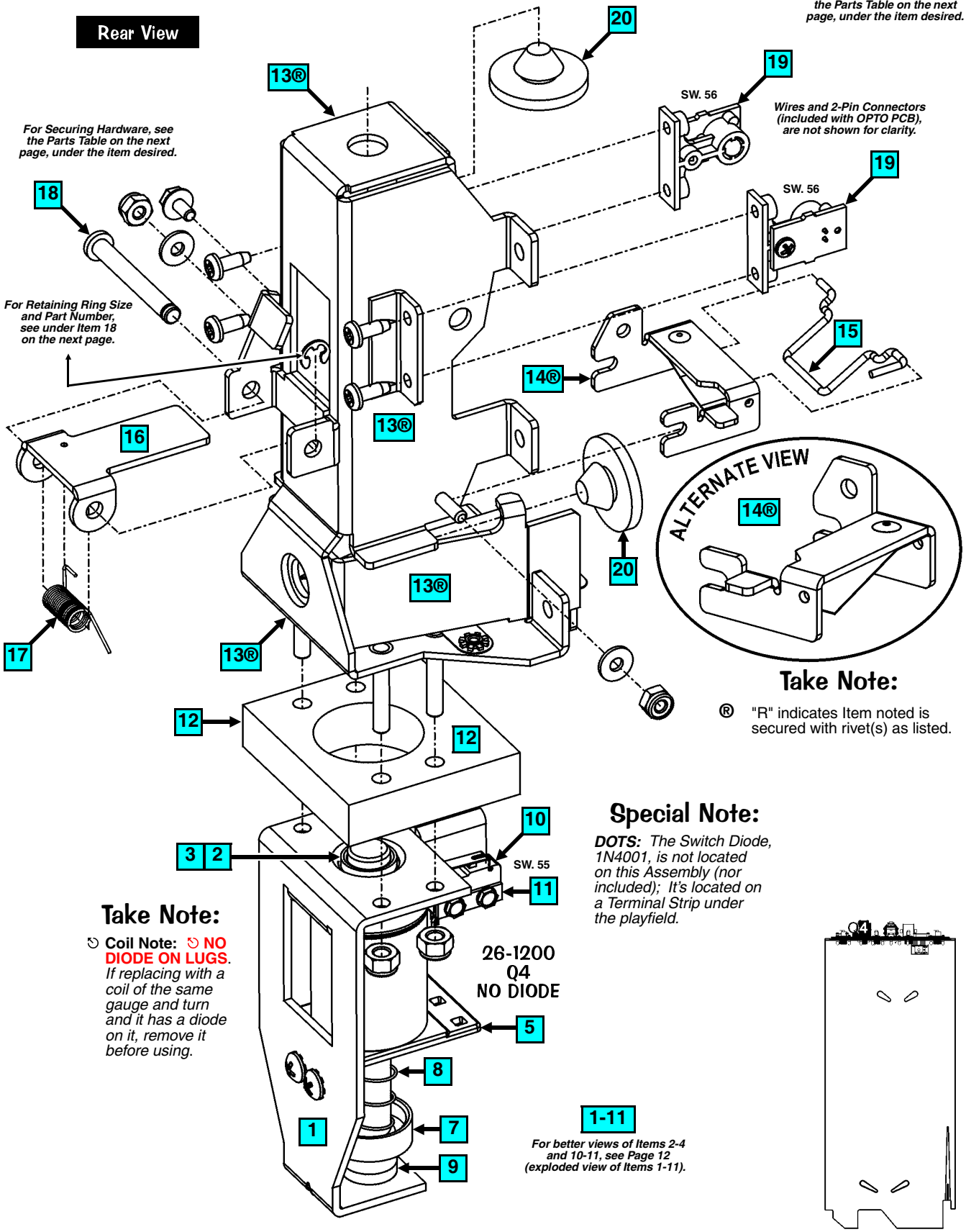

Take Note:

® "R" indicates Item noted is secured with rivet(s) as listed.

Special Note:

DOTS: *The Switch Diode, 1N4001, is not located on this Assembly (nor included); It's located on a Terminal Strip under the playfield.*

Take Note:

↻ **Coil Note:** ↻ **NO DIODE ON LUGS.** *If replacing with a coil of the same gauge and turn and it has a diode on it, remove it before using.*

VUK (Left) Assembly (located on the Back Panel), 500-6867-01 (Items 1-11) and VUK Tube Weldment Asm. (... Back Panel), Ind. Parts Only (Items 12-20) Continued

Ball is transferred from the lower playfield to the upper playfield when it enters this mechanism.

Nr.	VUK & WELDMENT PARTS	QTY.	SPI PART Nr.
1-11	VUK Assembly *(1-11 parts @ bottom)*	1	500-6867-01
	FOR A BREAKDOWN OF INDIVIDUAL PARTS, SEE PARTS TABLE BELOW ITEMS 1-11.		
12	Wood Block Spacer (for Items 1 & 2)	1	525-5648-00
13®	VUK Tube Weldment & Riveted Flap Assembly	1	515-7554-00
	Item 13® is secured with Item 12 to Item 1 by: #8-32 Nylon Stop Nut (Qty. 4) (240-5102-00) **and is sec'd to the Back Panel by:** #8-32 X 5/8" SHWH Swage (Zinc) (Qty. 5) (237-5975-03)		
	For Individual Items use : Tube Weldment (**515-7486-00**) **and** VUK Entry Flap (**535-9678-01**) **and is secured by:** Rivet, 1/8" ø X 3/16" Lg. (Qty. 2) (249-5001-00)		
14®	Gate Bracket & Spring Flap Assembly	1	515-7555-00
	Item 14® is secured to Item 1 by: #6-32 X 1/4" SHWH Swage (Zinc) (Qty. 1) (237-5976-01), #6 Washer (Qty. 2) (242-5001-00) **and** #-6-32 Nylon Stop Nut (Qty. 2) (240-5005-00)		
	For Individual Items use : Gate Bracket (**535-9679-00**) **and** Gate Spring Flap (**535-9680-00**) **and is secured by:** Rivet, 1/8" ø X 3/16" Lg. (Qty. 1) (249-5001-00) **and** Washer 9/64" I.D. X 5/16" O.D. X 1/32" (Qty. 1) (242-5017-00)		
15	Wireform (for Item 14® Gate)	1	535-9657-00
16	Door Bracket Pivot Flap	1	535-9655-00
17	Torsion Spring	1	267-5002-00
18	Grooved Clevis Pin 1-1/2" X 3/16" ø	1	530-5702-01
	Items 16-18 are secured by: Retaining Ring, 5/32" ø (Qty. 1/per) (270-5025-00) (Mfg. Ref. MMC 92735A160)		

Nr.	VUK & WELDMENT PARTS	QTY.	SPI PART Nr.
19	Transceiver OPTO PCB Assembly	2	500-6775-00
	Item 19 is secured to Item 13 by: #6 X 3/8" PPH (Zinc) Type -25 (Qty. 2/per) (237-5880-00)		
20	Deflector Pad (Bumper)	2	545-5428-00
	(ASM. REF. 500-6903-00, Items 1-20 [incl. wiring])		

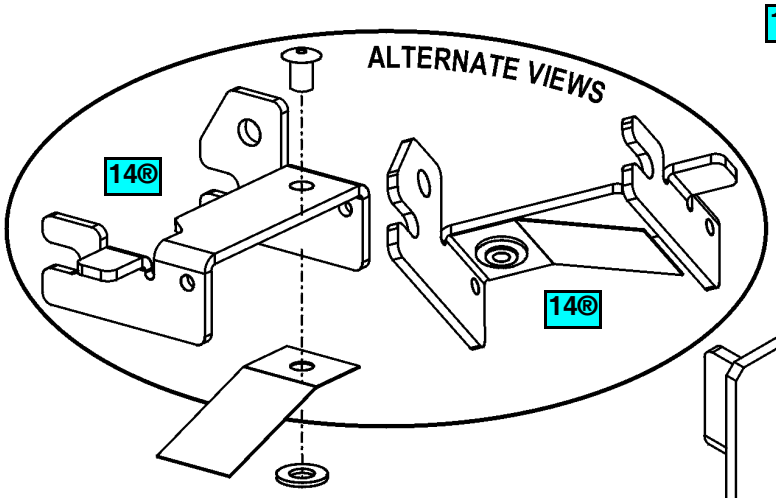

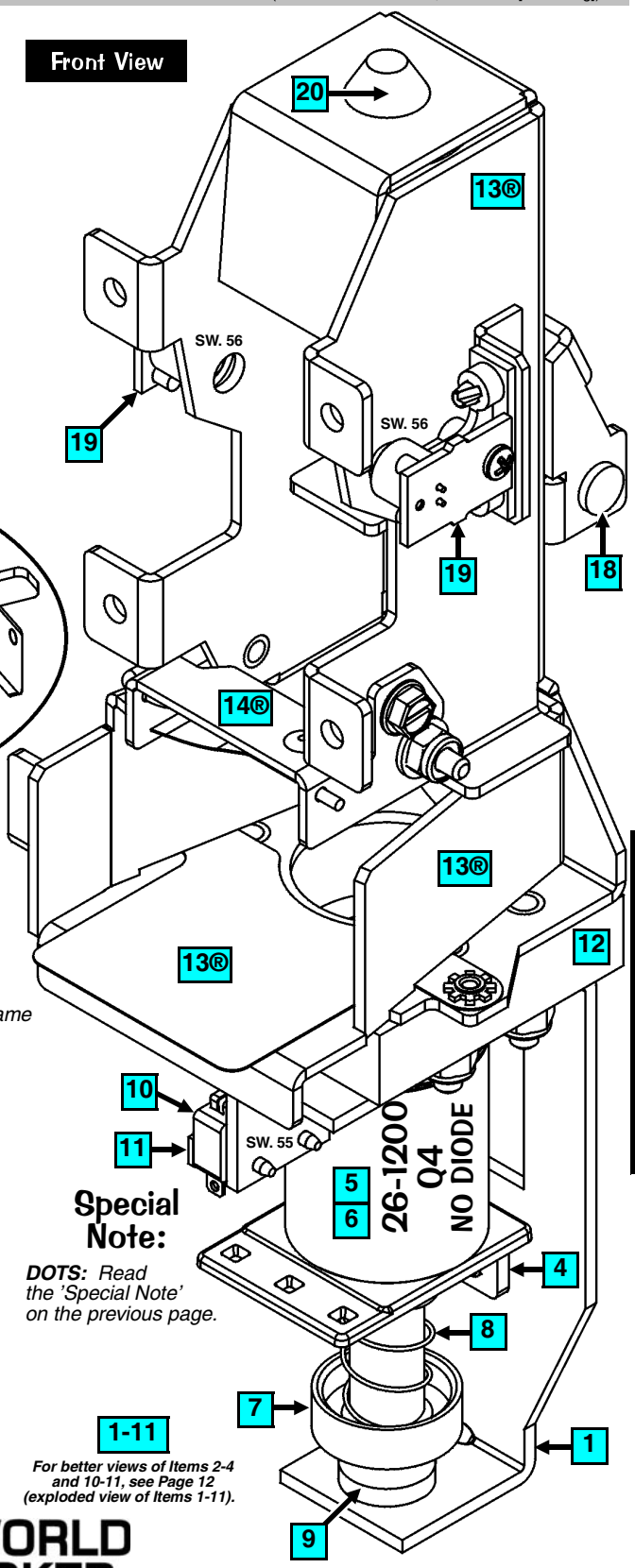

Take Note:

® "R" indicates Item noted is secured with rivet(s) as listed.

⍉ **Coil Note:** ⍉ **NO DIODE ON LUGS**. *If replacing with a coil of the same gauge and turn and it has a diode on it, remove it before using.*

Nr.	VUK PARTS	QTY.	SPI PART Nr.
1	Vertical Up-Kicker (VUK) Bracket, R.H. Style	1	535-9590-01
	Item 1 is secured below the playfield by: #8 X 1/2" SHWH AB (Zc.) (Qty. 5) (234-5101-00)		
2	Switch (Circular) Actuator	1	545-6129-00
3	Compression (Actuator) Spring	1	266-5083-00
4	Coil Retaining Bracket	1	535-5203-03
	Item 4 is secured to Item 1 by: #8-32 X 1/4" PPH (Serr) Zinc (Qty. 2) (232-5300-00)		
5	Coil, 26-1200 [NO DIODE]	1	090-5044-ND
	COIL DOES NOT REQUIRE A DIODE. SEE ⍉ COIL NOTE BELOW FOR DETAILS.		
6	Coil Sleeve (Short) (Formost #10-7077)	1	545-5076-01
7	Steel & Nylon Plunger Assembly	1	515-5941-01
8	Compression (Return) Spring	1	266-5020-00
9	Rubber Bumper (Grommet)	1	545-5105-00
10	Micro Switch **(Sim. Roller)**	1	180-5199-00
	Switch has a Diode (1N4004) (112-5003-00). *Can be replaced with (1N4001) (112-5001-00).*		
11	Switch Body Protect Plate	1	535-6539-00
	Item 11 secures Item 10 to 1 by: #2-56 X 1/2" HWH (Ser) #4HD (Qty. 2) (237-5937-02)		

Special Note:

DOTS: *Read the 'Special Note' on the previous page.*

For better views of Items 2-4 and 10-11, see Page 12 (exploded view of Items 1-11).

Down Post (Ball Stop) Assembly (located on the Back Panel), 500-6969-00 (Items 1-8) and Associated Part: See Parts Table Below.

Ball can be 'locked' before entering the upper playfield via the Right Ramp.

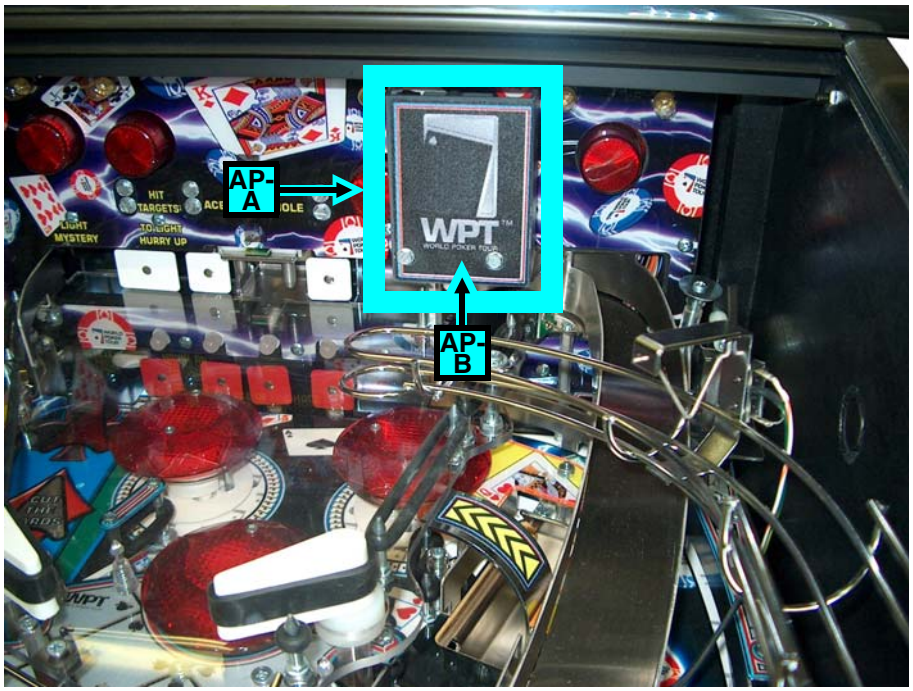

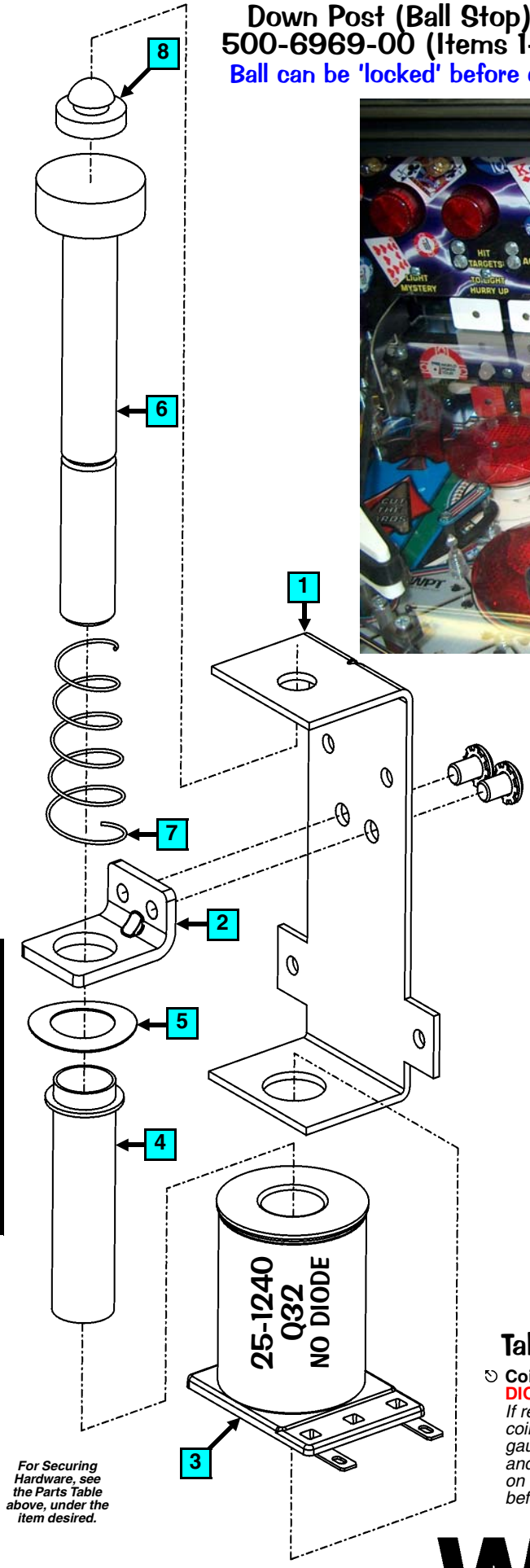

For Securing Hardware, see the Parts Table above, under the item desired.

Nr.	BALL STOP PARTS	QTY.	SPI PART Nr.
1	Ball Stop Coil Mounting Bracket	1	535-9772-00
	Item 1 is secured onto the Back Panel @ top rear of bracket by: #6-32 X 1" PPH MS Ext. Sems (Zinc) (Qty. 2) (232-5206-00), #6 Washer (Qty. 2) (242-5001-00) **and** Hex Spacer, 3/4" X 1/4" #6-32 Tap (Qty. 2) (254-5008-04) **and @ top front of bracket onto Hex Spacer 3/4" by:** #6-32 X 3/8" HWH Swage Ser. (Zinc) (Qty. 2) (237-5976-02), #6 Washer (Qty. 2) (242-5001-00) **and is secured onto the Back Panel @ bottom rear of bracket by:** #6-32 X 1-3/4" PPH (Zinc) (Qty. 2) (237-5511-00), #6 Washer (Qty. 2) (242-5001-00) **and** Hex Spacer, 3/4" X 1/4" #6-32 Tap (Qty. 2) (254-5008-04) ***Note:*** *Screw with washer enters the rear of the Back Panel and is threaded through the Hex Spacer 3/4" behind the bracket. Remaining hardware below AP-A below which also secures the Cover.*		
2	Coil Retaining Bracket	2	535-5203-03
	Item 2 is secured by: #8-32 X 1/4" PPH MS (Sems) Zinc (Qty. 2/per) (232-5300-00)		
3	Coil, 25-1240 [NO DIODE]	1	090-5034-ND
	COIL DOES NOT REQUIRE A DIODE. SEE ⏲ COIL NOTE BELOW FOR DETAILS.		
4	Coil Sleeve (Short) (Formost #10-7077)	1	545-5076-01
5	Spring Washer (17/32" ID X 3/4" X 1")	1	269-5002-00
6	Plunger with Nylon Tip	1	515-7309-00
	For Individual Items use : Plunger (**530-5210-00**) **and** Nylon Plunger Tip" (**530-5639-00**)		
7	Compression (Relay) Spring	1	266-5020-00
8	Rubber Bumper (Grommet)	1	545-5105-00

ASSOCIATED PARTS **ARE NOT INCLUDED** WITH THE ABOVE ASSEMBLY.

Nr.	ASSOCIATED PART(S)	QTY.	SPI PART Nr.
AP-A	Cover **(Gray Molded Plastic)** ***NO DECALS***	1	545-6236-00
	Item AP-A is secured onto Item 1 @ bottom of bracket (Coil side) onto screw end by: Hex Spacer, 1-1/4" X 1/4" #6-32 Tap (Qty. 2) (254-5008-11) **and** #6-32 X 3/8" HWH Swage Ser. (Zinc) (Qty. 2) (237-5976-02)		
AP-B	***Kit:*** **Decals** *(includes -15. -16 & -17)* (Qty. 1) 802-5000-88		
	Note: *Individual Decals (820-6370-XX) are not available individually, ordering of kit is required.*		

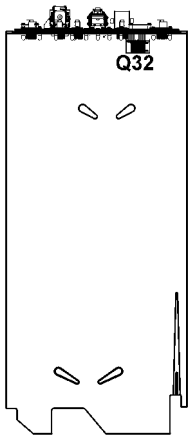

Take Note:

⏲ **Coil Note: ⏲ NO DIODE ON LUGS.** *If replacing with a coil of the same gauge and turn and it has a diode on it, remove it before using.*

Transfer Trough & OPTOs Individual Parts Only

Ball can exit from the upper playfield through this (another exit is via the Right Wire Ramp).

Nr.	TRANSFER TROUGH PARTS	QTY.	SPI PART Nr.
1	Transfer Trough Weldment Assembly	1	515-7483-00
	Item 1 is secured to the Back Panel @ top by: #8-32 X 1/2" SHWH Swage (Zinc) (Qty. 2) (237-5975-01) **and @ bottom by:** #8 X 1/2" SHWH AB (Zinc) (Qty. 2) (234-5101-00)		

Nr.	TRANSFER TROUGH PARTS	QTY.	SPI PART Nr.
2	Transceiver OPTO PCB Assembly	2	500-6775-00
	Item 2 is secured to Item 1 by: #6 X 3/8" PPH (Zinc) Type -25 (Qty. 2/per) (237-5880-00) (ASM. REF. 500-6909-00, Items 1-2 [incl. wiring])		

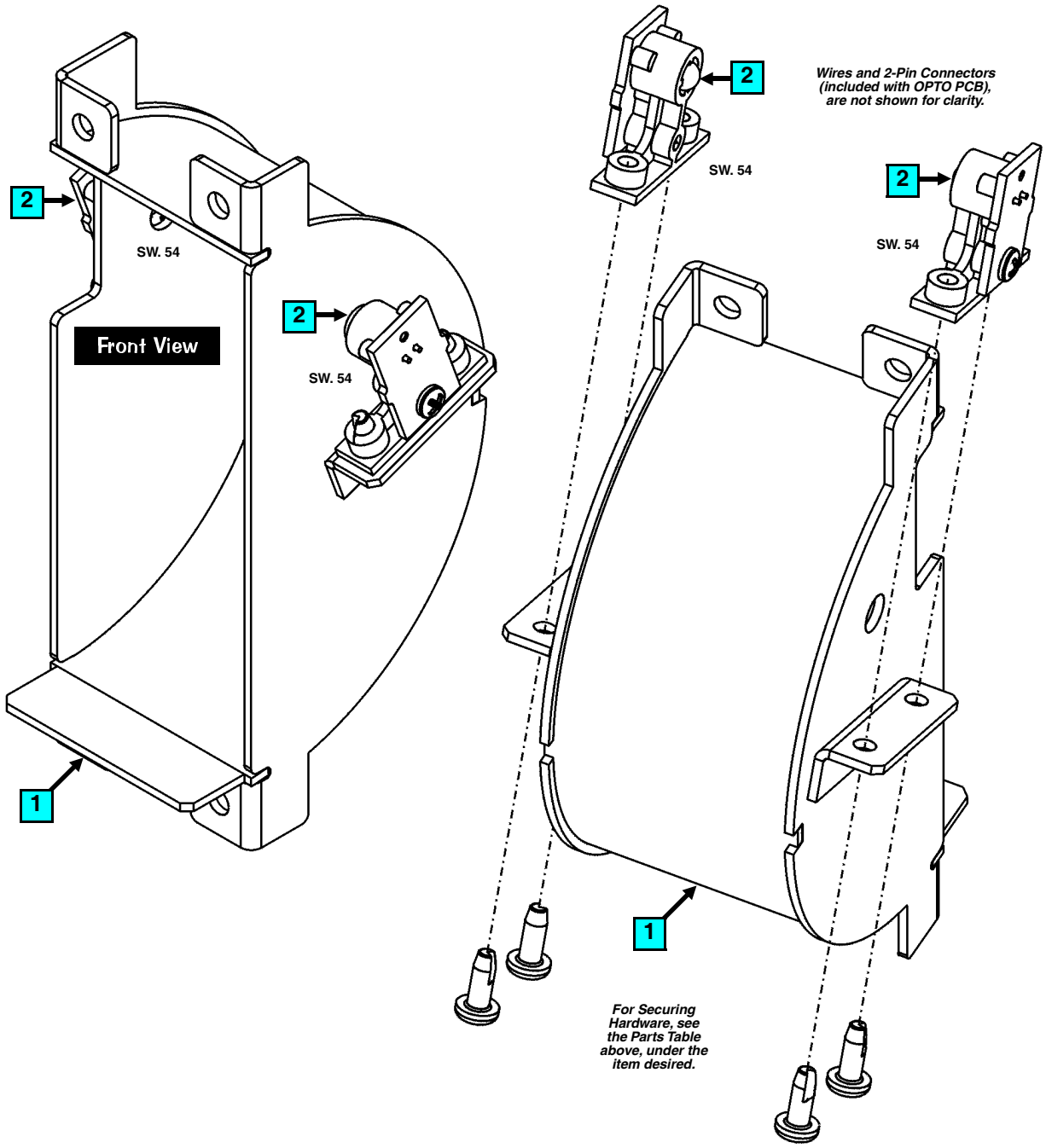

Schematics, Wiring & Printed Circuit Boards

Table of Contents for Section 5

Chapter 1, Backbox Wiring ..... 96 – 98

- Table of Contents for Section 5 95
- Coils Detailed Chart Table 96
- Backbox I/O Power Driver Board Detailed Wiring Diagram 97
- Backbox Board Layout Wiring Diagram 98

Chapter 2, Playfield Wiring ..... 99 – 103

- General Illumination Circuit Detailed Wiring Diagram 99
- Playfield Switch Wiring Diagram 100
- Playfield Lamp Wiring Diagram 101
- Playfield Terminal Strips, Fuses & Misc. Wiring Descriptions & Locations 102
- 4-Flipper Circuit Wiring Diagram 103

Chapter 3, Cabinet and Coin Door Wiring ..... 105 – 108

- Transformer Power Wiring Diagram 105
- Cabinet Wiring Diagram 106
- Coin Door Wiring Diagram 107

Chapter 4, Printed Circuit Boards (PCBs) ..... 109 – 130

- Trough Up-Kicker Dual OPTO PCBs (515-0173-00 & 515-0174-00) Theory of Op. & Schematic ..... (Top) 109
  - Trough Up-Kicker Dual OPTO PCBs (515-0173-00 & 515-0174-00) Component Layout & Parts ..... (Bot) 109
- OPTO Troubleshooting ..... (Top) 110
  - Trough Dual OPTO PCBs Alignment / Tests for LED1 & LED2 110-111
- I/O Power Driver PCB S.A.M. System (520-5249-00) Schematic (Sheet 1 of 4) 112-113
- I/O Power Driver PCB S.A.M. System (520-5249-00) Schematic (Sheet 2 of 4) 114-115
- I/O Power Driver PCB S.A.M. System (520-5249-00) Schematic (Sheet 3 of 4) 116-117
- I/O Power Driver PCB S.A.M. System (520-5249-00) Schematic (Sheet 4 of 4) 118-119
  - I/O Power Driver PCB S.A.M. System (520-5249-00) Component Layout *(call for page)* 120
  - I/O Power Driver PCB S.A.M. System (520-5249-00) Parts *(call for page)* 121
- CPU / Sound PCB S.A.M. System (520-5246-00) Schematic (Sheet 1 of 5) 122-123
- CPU / Sound PCB S.A.M. System (520-5246-00) Schematic (Sheet 2 of 5) 124-125
- CPU / Sound PCB S.A.M. System (520-5246-00) Schematic (Sheet 3 of 5) 126-127
- CPU / Sound PCB S.A.M. System (520-5246-00) Schematic (Sheet 4 of 5) 128-129
- CPU / Sound PCB S.A.M. System (520-5246-00) Schematic (Sheet 5 of 5) 130-131
  - CPU / Sound PCB S.A.M. System (520-5246-00) Component Layout 132
  - CPU / Sound PCB S.A.M. System (520-5246-00) Parts *(call for page)* 133
- Display Power Supply PCB (520-5138-00) Schematic 134
  - Display Power Supply PCB (520-5138-00) Component Layout & Parts 134
- OPTO Interrupter (520-5252-04) Schematic (on Drop Targets) 135
- Playfield Switches OPTO Transceiver PCBs (500-6775-00) Schematic ..... (Top) 136
  - Playfield Switches OPTO Transceiver PCBs (500-6775-00) Component Layout & Parts ..... (Top) 136
- Playfield OPTO Transmitter / Receiver Amplifier PCB (520-5239-01) Schematic ..... (Bot) 136
  - Playfield OPTO Transmitter / Receiver Amplifier PCB (520-5239-01) Component Layout & Parts ..... (Top) 137
  - Playfield OPTO Transmitter / Receiver Amplifier PCB (520-5239-01) Wiring (General) ..... (Bot) 137
- Mini PCB OPTOs (500-6775-00) to OPTO Trans/Rec Amp. Bd. Wiring Config. 138
- OPTO Interrupter (520-5251-00) Schematic ..... (Top) 139
- OPTO Transmitter (520-5247-00) Schematic ..... (Bot) 139
- 14-Block LED PCB (520-5250-14) Schematic (Sheet 1 of 2) 140
- 14-Block LED PCB (520-5250-14) Schematic (Sheet 2 of 2) 141
- Q21 50V Step-Up Driver PCB (520-5254-00) Schematic 142
  - Q21 50V Step-Up Driver PCB (520-5254-00) Component Layout & Parts 142

Visit **www.SternPinball.com/schematics.htm** for the latest 11" X 17" Schematics *(or "Split 8-1/2" X 11")* for the **Display Power Supply, Display Controller, I/O Power Driver & CPU/Sound PCBs** (White Star™ System Only // SAM System PCBs ***COMING SOON!***). Along with the schematics you'll find the component layout and theory of operation. Keep visiting as these files are continuously improved with more "search" links in the documents. The files are in PDF Format *(Adobe® Reader required)*. They may be slow to open in the website only, but once on your harddrive they'll open fast. Inside the schematics you can utilize internal links where addresses may direct you to another sheet in the schematic set *(further instructions within documents)*. To "download" once open, in your browser click "File" "Send" "Page by eMail". It will be sent to your eMail Address, where there you can save the file to your hardrive. **ALL 11 X 17 SCHEMATICS AND OTHER PDF FILES ARE ALSO AVAILABLE ON CD-ROM.**

Use the below ***Coils Detailed Chart Table*** in conjunction with *Sec. **5**, Chp. **1**, Backbox I/O Power Driver Board Detailed Wiring Diagram (I/O Board Connectors J6, J7, J8 & J9) and Backbox Board Layout Wiring Diagram:*

	High Current Coils Group 1	Drive Transistor	Driver Ouput Board	Power Line Color	Power Line Connection	Power Voltage	Drive Transistor Control Line Color	D.T. Control Line Connect	Coil GA-Turn or Bulb Type
#1	TROUGH UP-KICKER	Q1	▲ I/O Power Driver ▼	YEL-VIO	J10-P9/10	50v DC	BRN-BLK	J8-P1	26-1200 ↻ 090-5044-ND
#2	AUTO LAUNCH	Q2		YEL-VIO	J10-P9/10	50v DC	BRN-RED	J8-P3	23-800 ↻ 090-5001-ND
#3	SHOOTER LANE VUK	Q3		YEL-VIO	J10-P9/10	50v DC	BRN-ORG	J8-P4	26-1200 ↻ 090-5044-ND
#4	LEFT VUK	Q4		YEL-VIO	J10-P9/10	50v DC	BRN-YEL	J8-P5	26-1200 ↻ 090-5044-ND
#5	LOWER LEFT DROP RESET	Q5		YEL-VIO	J10-P9/10	50v DC	BRN-GRN	J8-P6	23-800 ↻ 090-5001-ND
#6	UPPER LEFT DROP RESET	Q6		YEL-VIO	J10-P9/10	50v DC	BRN-BLU	J8-P7	23-800 ↻ 090-5001-ND
#7	MIDDLE DROP RESET	Q7		YEL-VIO	J10-P9/10	50v DC	BRN-VIO	J8-P8	23-800 ↻ 090-5001-ND
#8	RIGHT DROP RESET	Q8		YEL-VIO	J10-P9/10	50v DC	BRN-GRY	J8-P9	23-800 ↻ 090-5001-ND

	High Current Coils Group 2	Drive Transistor	Driver Ouput Board	Power Line Color	Power Line Connection	Power Voltage	Drive Transistor Control Line Color	D.T. Control Line Connect	Coil GA-Turn or Bulb Type
#9	LEFT BUMPER	Q9	▲ I/O Power Driver ▼	YEL-VIO	J10-P9/10	50v DC	BLU-BRN	J9-P1	26-1200 ↻ 090-5044-ND
#10	RIGHT BUMPER	Q10		YEL-VIO	J10-P9/10	50v DC	BLU-RED	J9-P2	26-1200 ↻ 090-5044-ND
#11	BOTTOM BUMPER	Q11		YEL-VIO	J10-P9/10	50v DC	BLU-ORG	J9-P4	26-1200 ↻ 090-5044-ND
#12	JAIL UP	Q12		YEL-VIO	J10-P9/10	50v DC	BLU-YEL	J9-P5	26-1200 ↻ 090-5044-ND-NL
#13	UPPER PF LEFT FLIPPER	Q13		GRY-YEL~3A Fuse~RED-YEL	J10-P6/7	50v DC	BLU-GRN	J9-P6	23-1100 ↻ 090-5030-ND
#14	UPPER PF RIGHT FLIPPER	Q14		BLU-YEL~3A Fuse~RED-YEL	J10-P6/7	50v DC	BLU-BLK	J9-P7	23-1100 ↻ 090-5030-ND
#15	LEFT FLIPPER (50v RED/YEL)	Q15		GRY-YEL~3A Fuse~RED-YEL	J10-P6/7	50v DC	ORG-GRY	J9-P8	22-1080 ↻ 090-5032-ND
#16	RIGHT FLIPPER (50v RED/YEL)	Q16		BLU-YEL~3A Fuse~RED-YEL	J10-P6/7	50v DC	ORG-VIO	J9-P9	22-1080 ↻ 090-5032-ND

	Low Current Coils Group 1	Drive Transistor	Driver Ouput Board	Power Line Color	Power Line Connection	Power Voltage	Drive Transistor Control Line Color	D.T. Control Line Connect	Coil GA-Turn or Bulb Type
#17	LEFT SLINGSHOT	Q17	▲ I/O Power Driver ▼	BROWN	J7-P1	20v DC	VIO-BRN	J7-P2	23-800 ↻ 090-5001-ND
#18	RIGHT SLINGSHOT	Q18		BROWN	J7-P1	20v DC	VIO-RED	J7-P3	23-800 ↻ 090-5001-ND
#19	JAIL LATCH [MINI-COIL]	Q19		BROWN	J7-P1	20v DC	VIO-ORG	J7-P4	27-880 ↻ 090-5072-05
#20	LEFT RAMP UP POST	Q20		BROWN	J7-P1	20v DC	VIO-YEL	J7-P6	25-1240 ↻ 090-5034-ND
#21	BUMPER EJECT	Q21		YEL-VIO	J10-P9/10	50v DC	WHITE </I> VIO-GRN	J7-P7	26-1200 P 090-5044-ND

*For a wiring diagram, see Sec. **5**, Chp. **1**. For the Step-Up Driver PCB (520-5254-00) Schematic, see Sec. **5**, Chp. **4**, **Q21 50V Step-Up Driver Board Schematic**.*

#22	FLASH: LEFT SLINGSHOT	Q22	▲ I/O Power Driver ▼	ORANGE	J6-P10	20v DC	VIO-BLU	J7-P8	#89 Bulb 165-5000-89
#23	FLASH: RIGHT SLINGSHOT	Q23		ORANGE	J6-P10	20v DC	VIO-BLK	J7-P9	#89 Bulb 165-5000-89
#24	OPTIONAL COIL	Q24		RED	J16-P4>8	5v DC	VIO-GRY	J7-P10	Opt. 5v

Diode **O**n **T**erminal **S**trip (if noted)

	Low Current Coils Group 2	Drive Transistor	Driver Ouput Board	Power Line Color	Power Line Connection	Power Voltage	Drive Transistor Control Line Color	D.T. Control Line Connect	Coil GA-Turn or Bulb Type
#25	FLASH: LEFT SPINNER	Q25	▲ I/O Power Driver ▼	ORANGE	J6-P10	20v DC	BLK-BRN	J6-P1	#89 Bulb 165-5000-89
#26	FLASH: BACKPANEL #1 (L)	Q26		ORANGE	J6-P10	20v DC	BLK-RED	J6-P2	#89 Bulb 165-5000-89
#27	FLASH: BACKPANEL #2	Q27		ORANGE	J6-P10	20v DC	BLK-ORG	J6-P3	#89 Bulb 165-5000-89
#28	FLASH: BACKPANEL #3	Q28		ORANGE	J6-P10	20v DC	BLK-YEL	J6-P4	#89 Bulb 165-5000-89
#29	FLASH: BACKPANEL #4	Q29		ORANGE	J6-P10	20v DC	BLK-GRN	J6-P5	#89 Bulb 165-5000-89
#30	FLASH: BACKPANEL #5 (R)	Q30		ORANGE	J6-P10	20v DC	BLK-BLU	J6-P6	#89 Bulb 165-5000-89
#31	FLASH: RIGHT VUK	Q31		ORANGE	J6-P10	20v DC	BLK-VIO	J6-P7	#89 Bulb 165-5000-89
#32	RIGHT RAMP DOWN POST	Q32		BROWN	J7-P1	20v DC	BLK-GRY	J6-P8	26-1200 ↻ 090-5044-ND

Note: In Test Flash Lamps Menu ("Flash" Icon), Flashers tested are all Flash Lamps located between Q1-Q32 (This Game: Q22-Q23 & Q25-Q31)

Backbox I/O Power Driver Board (Coils Q1-Q32) Detailed Wiring Diagram

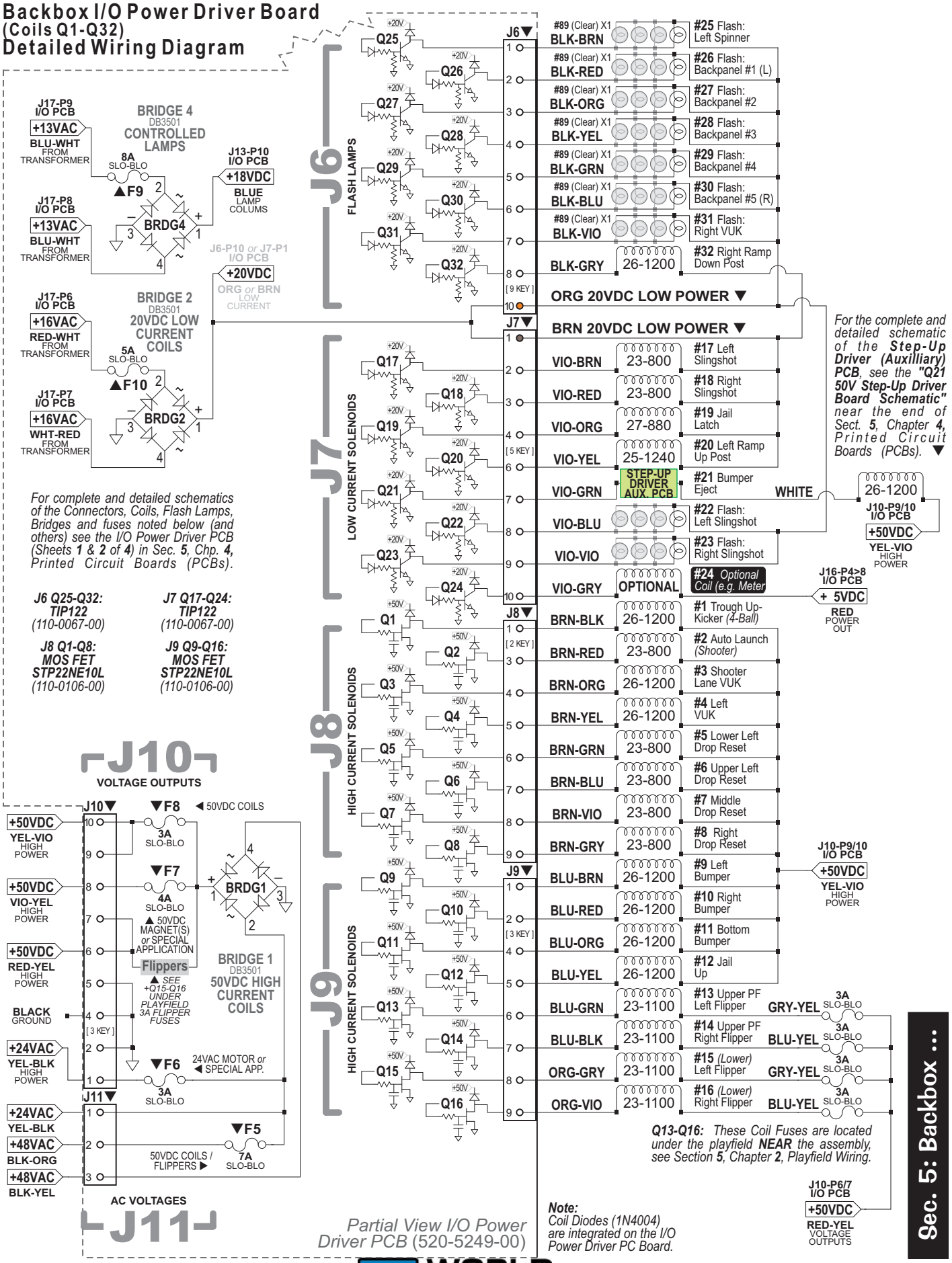

*For the complete and detailed schematic of the **Step-Up Driver (Auxilliary) PCB**, see the **"Q21 50V Step-Up Driver Board Schematic"** near the end of Sect. **5**, Chapter **4**, Printed Circuit Boards (PCBs).* ▼

*For complete and detailed schematics of the Connectors, Coils, Flash Lamps, Bridges and fuses noted below (and others) see the I/O Power Driver PCB (Sheets **1** & **2** of **4**) in Sec. **5**, Chp. **4**, Printed Circuit Boards (PCBs).*

J6 Q25-Q32: ***TIP122*** *(110-0067-00)*	***J7 Q17-Q24:*** ***TIP122*** *(110-0067-00)*
J8 Q1-Q8: ***MOS FET STP22NE10L*** *(110-0106-00)*	***J9 Q9-Q16:*** ***MOS FET STP22NE10L*** *(110-0106-00)*

Q13-Q16: *These Coil Fuses are located under the playfield **NEAR** the assembly, see Section **5**, Chapter **2**, Playfield Wiring.*

Note: *Coil Diodes (1N4004) are integrated on the I/O Power Driver PC Board.*

Partial View I/O Power Driver PCB (520-5249-00)

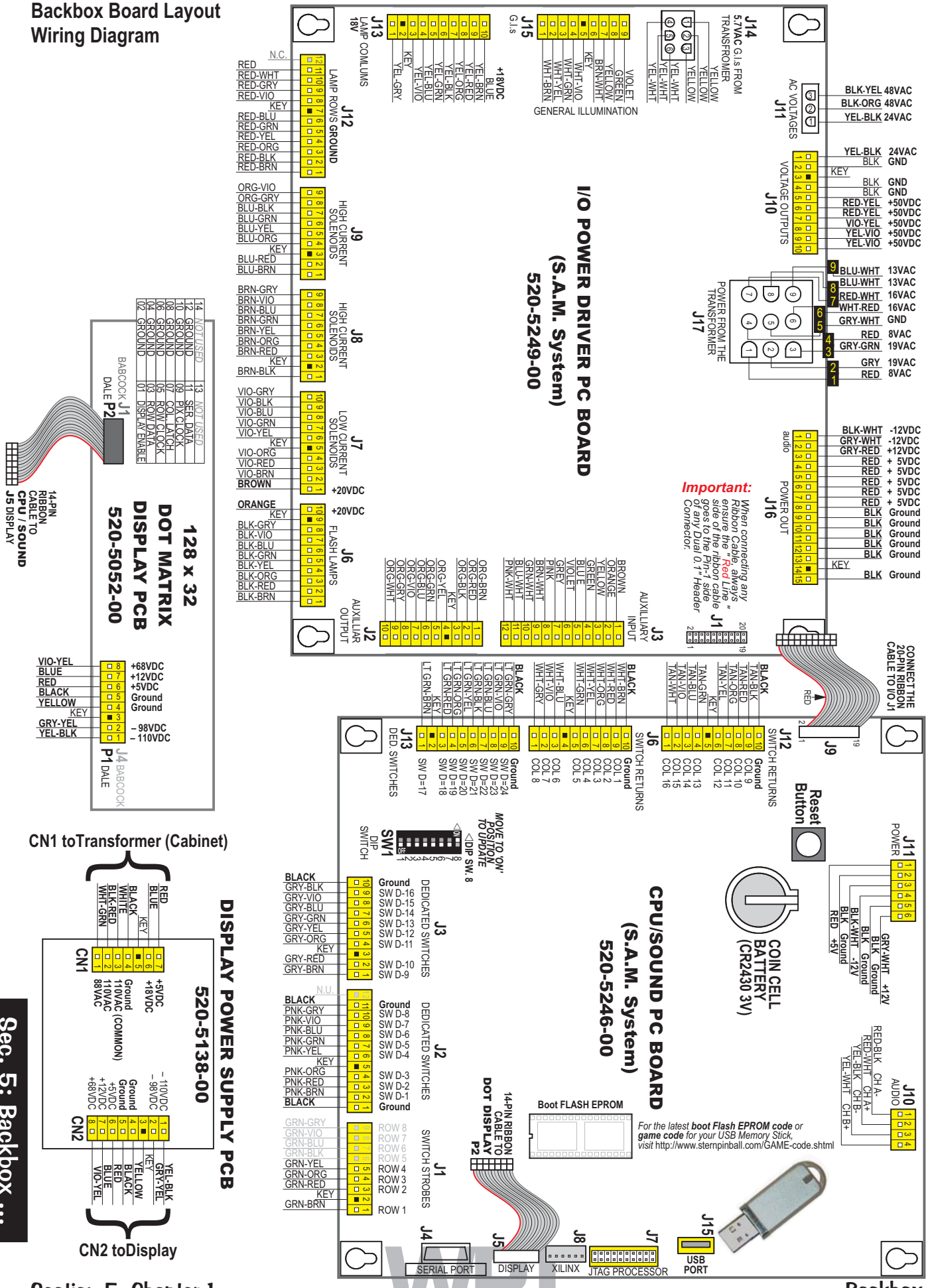

Sec. 5: Backbox ...

WPT
WORLD POKER TOUR

Playfield Wiring

General Illumination Circuit Detailed Wiring Diagram

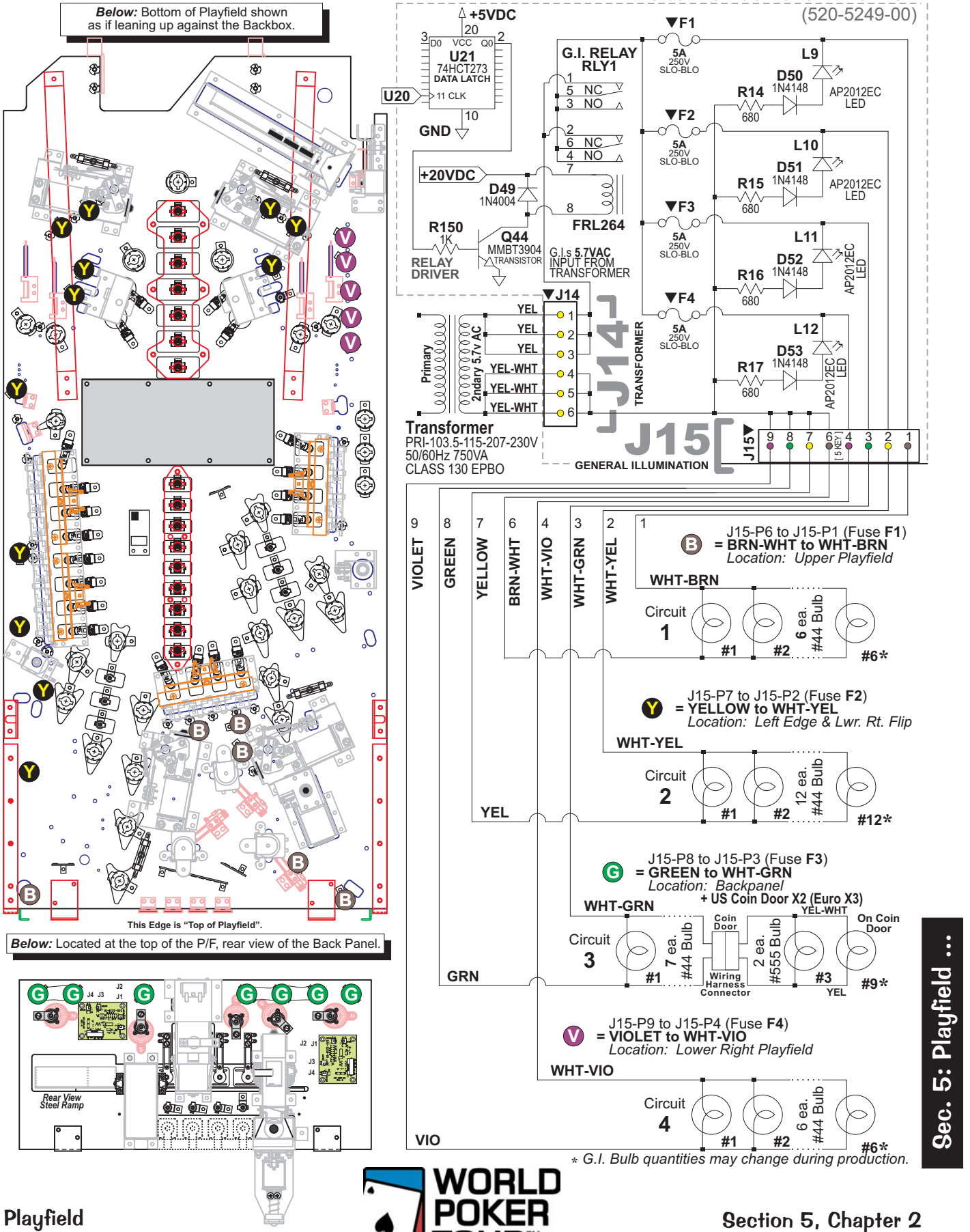

Playfield Switch Wiring Diagram

For Switch(es): 03, 49 & 55

Diode On Terminal Strip -or- Diode On Diode Board

Note: All Switch, Lamp & Coil assemblies require diodes. Some diodes are ***located under the playfield*** on Terminal Strips ***or*** Diode Boards and not on the assemblies.

Please Note: *Switch & Lamp Descriptions may differ slightly than that of the Dot Display due to space restraints.*

Sec. 5: Playfield ...

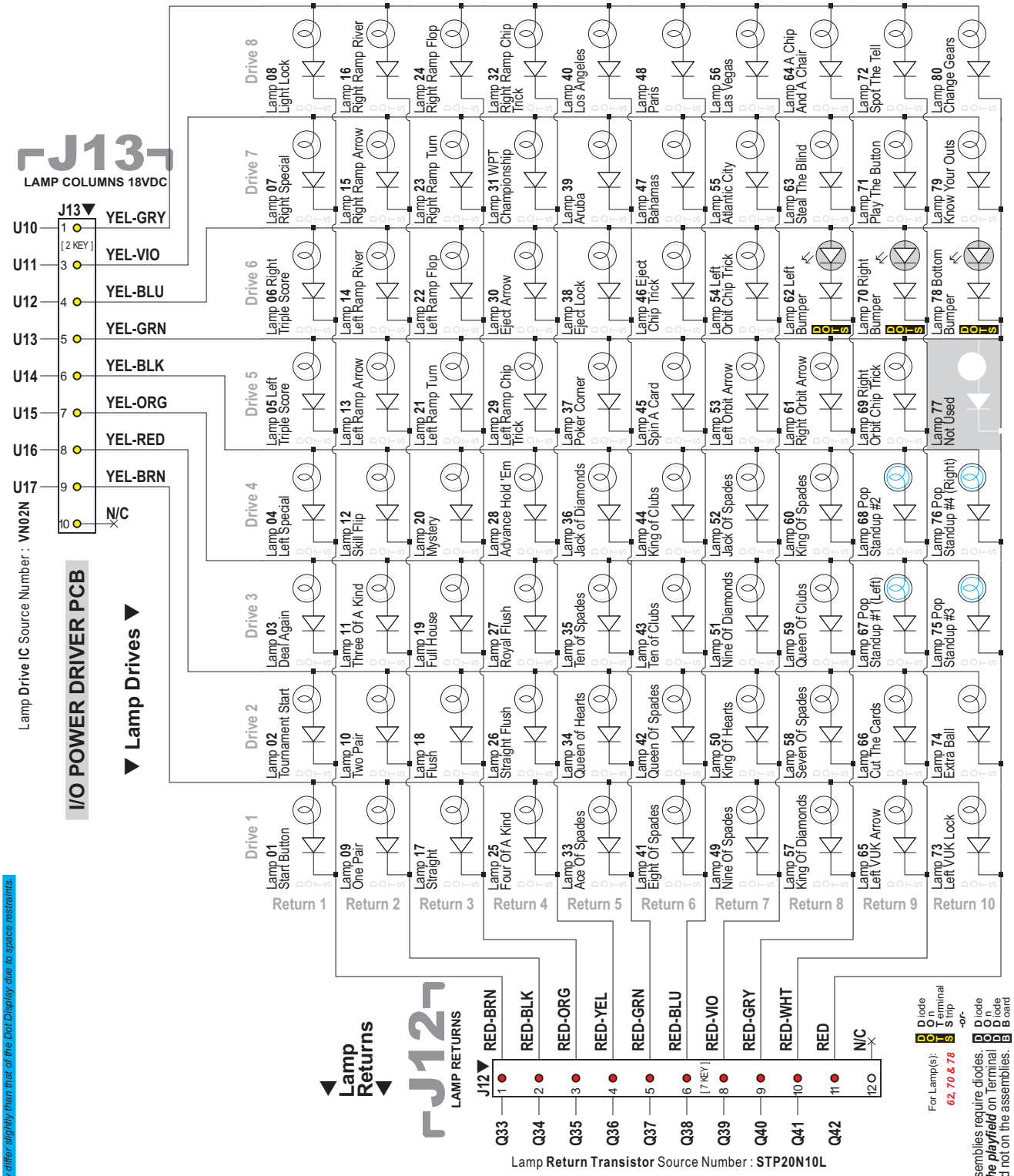
J13
LAMP COLUMNS 18VDC
J13
U10 1 YEL-GRY
[2 KEY]
U11 3 YEL-VIO
U12 4 YEL-BLU
U13 5 YEL-GRN
U14 6 YEL-BLK
U15 7 YEL-ORG
U16 8 YEL-RED
U17 9 YEL-BRN
10 N/C
Lamp Drive IC Source Number : VN02N
I/O POWER DRIVER PCB
▼ Lamp Drives ▼
Drive 1
Drive 2
Drive 3
Drive 4
Drive 5
Drive 6
Drive 7
Drive 8
Lamp 01 Start Button
Lamp 02 Tournament Start
Lamp 03 Deal Again
Lamp 04 Left Special
Lamp 05 Left Triple Score
Lamp 06 Right Triple Score
Lamp 07 Right Special
Lamp 08 Light Lock
Lamp 09 One Pair
Lamp 10 Two Pair
Lamp 11 Three Of A Kind
Lamp 12 Skill Flip
Lamp 13 Left Ramp Arrow
Lamp 14 Left Ramp River
Lamp 15 Right Ramp Arrow
Lamp 16 Right Ramp River
Lamp 17 Straight
Lamp 18 Flush
Lamp 19 Full House
Lamp 20 Mystery
Lamp 21 Left Ramp Turn
Lamp 22 Left Ramp Flop
Lamp 23 Right Ramp Turn
Lamp 24 Right Ramp Flop
Lamp 25 Four Of A Kind
Lamp 26 Straight Flush
Lamp 27 Royal Flush
Lamp 28 Advance Hold 'Em
Lamp 29 Left Ramp Chip Trick
Lamp 30 Eject Arrow
Lamp 31 WPT Championship
Lamp 32 Right Ramp Chip Trick
Lamp 33 Ace Of Spades
Lamp 34 Queen of Hearts
Lamp 35 Ten of Spades
Lamp 36 Jack of Diamonds
Lamp 37 Poker Corner
Lamp 38 Eject Lock
Lamp 39 Aruba
Lamp 40 Los Angeles
Lamp 41 Eight Of Spades
Lamp 42 Queen Of Spades
Lamp 43 Ten of Clubs
Lamp 44 King of Clubs
Lamp 45 Spin A Card
Lamp 46 Eject Chip Trick
Lamp 47 Bahamas
Lamp 48 Paris
Lamp 49 Nine Of Spades
Lamp 50 King Of Hearts
Lamp 51 Nine Of Diamonds
Lamp 52 Jack Of Spades
Lamp 53 Left Orbit Arrow
Lamp 54 Left Orbit Chip Trick
Lamp 55 Atlantic City
Lamp 56 Las Vegas
Lamp 57 King Of Diamonds
Lamp 58 Seven Of Spades
Lamp 59 Queen Of Clubs
Lamp 60 King Of Spades
Lamp 61 Right Orbit Arrow
Lamp 62 Left Bumper
Lamp 63 Steal The Blind
Lamp 64 A Chip And A Chair
Lamp 65 Left VUK Arrow
Lamp 66 Cut The Cards
Lamp 67 Pop Standup #1 (Left)
Lamp 68 Pop Standup #2
Lamp 69 Right Orbit Chip Trick
Lamp 70 Right Bumper
Lamp 71 Play The Button
Lamp 72 Spot The Tell
Lamp 73 Left VUK Lock
Lamp 74 Extra Ball
Lamp 75 Pop Standup #3
Lamp 76 Pop Standup #4 (Right)
Lamp 77 Not Used
Lamp 78 Bottom Bumper
Lamp 79 Know Your Outs
Lamp 80 Change Gears
Return 1
Return 2
Return 3
Return 4
Return 5
Return 6
Return 7
Return 8
Return 9
Return 10
▼ Lamp Returns ▼
J12
LAMP RETURNS
J12
1 RED-BRN
2 RED-BLK
3 RED-ORG
4 RED-YEL
5 RED-GRN
6 RED-BLU
[7 KEY]
8 RED-VIO
9 RED-GRY
10 RED-WHT
11 RED
12 N/C
Q33
Q34
Q35
Q36
Q37
Q38
Q39
Q40
Q41
Q42
Lamp Return Transistor Source Number : STP20N10L
Diode On Terminal Strip -or- Diode On Diode Board
For Lamp(s): 62, 70 & 78
Note: All Switch, Lamp & Coil assemblies require diodes. Some diodes are located under the playfield on Terminal Strips or Diode Boards and not on the assemblies.
Please Note: Switch & Lamp Descriptions may differ slightly than that of the Dot Display due to space restraints.

Playfield Terminal Strips, Fuses & Misc. Wiring Descriptions & Locations

Please Note: *Terminal Strip(s), Diode Board(s) and/or Fuse Holder(s) locations shown, represent the general location (your game may differ slightly).*

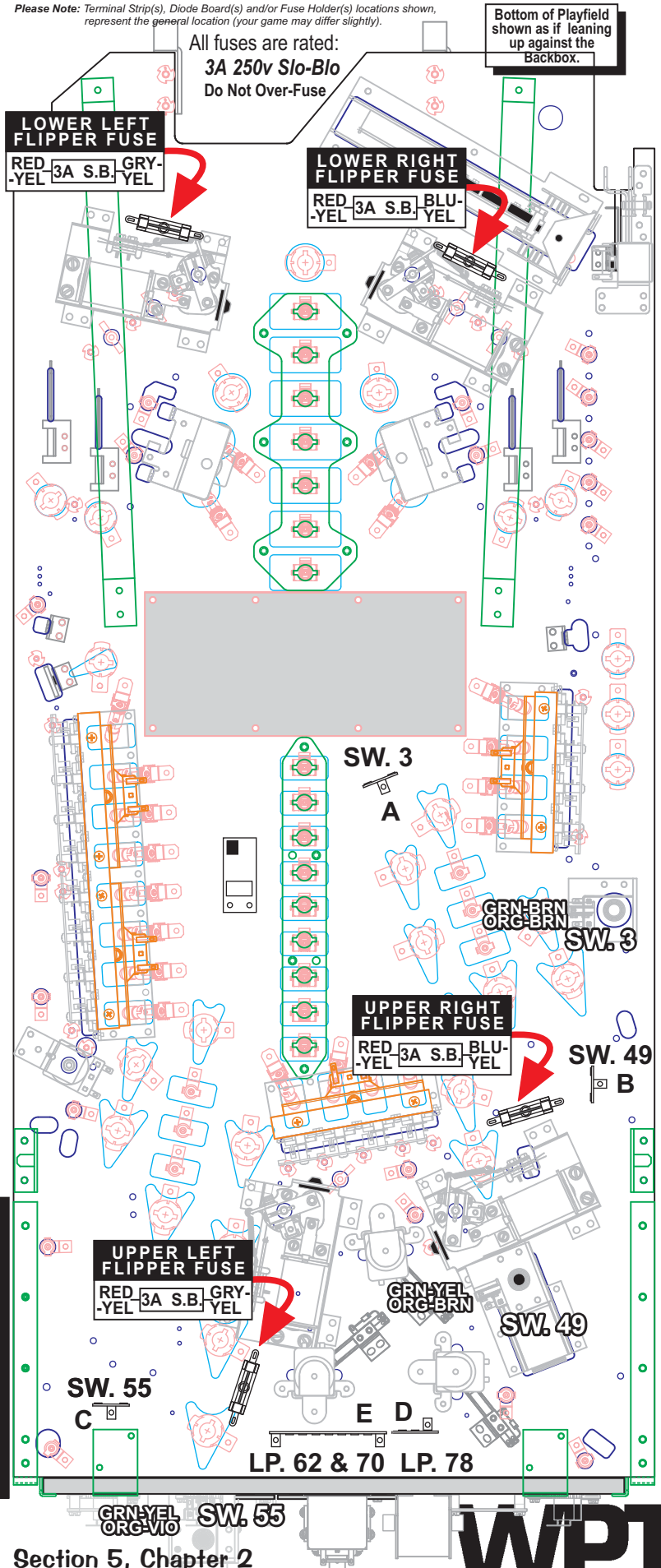

Explanation:

All Switch, Lamp & Coil assemblies require diodes. Some diodes are ***located under the playfield*** on Terminal Strips ***or*** Diode Boards and not on the assemblies. The Switch and Lamp Matrix Grids also note which Switch or Lamp has a diode on a Terminal Strip *(noted by **"DOTS"** meaning: "**D**iode **O**n **T**erminal **S**trip") or on a Diode Board (noted by **"DODB"** meaning: "**D**iode **O**n **D**iode **B**oard").*

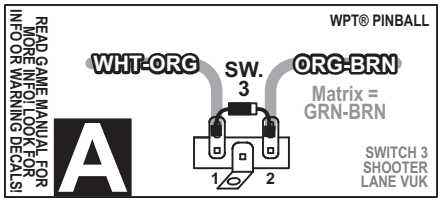

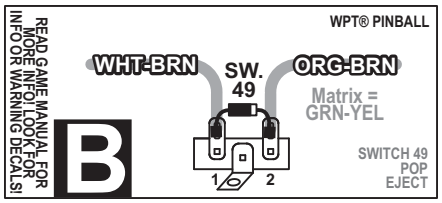

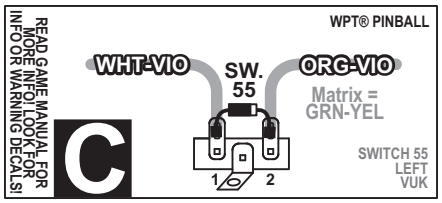

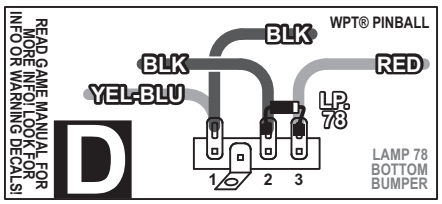

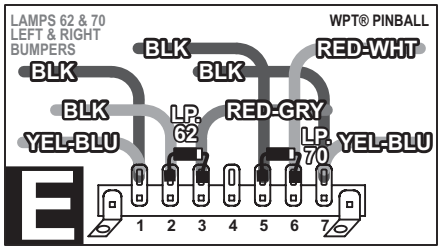

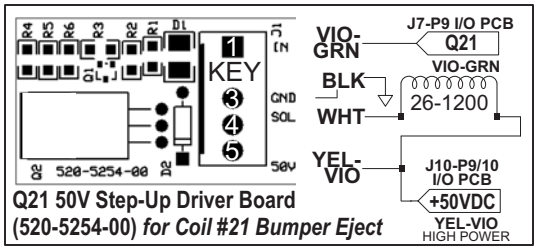

See the Pink Pages, Playfield Bottom - Misc. Parts and Brackets for Terminal Strips, Diodes, Fuses and Fuse Holders Part Numbers.

4-Flipper Circuit Wiring Diagram

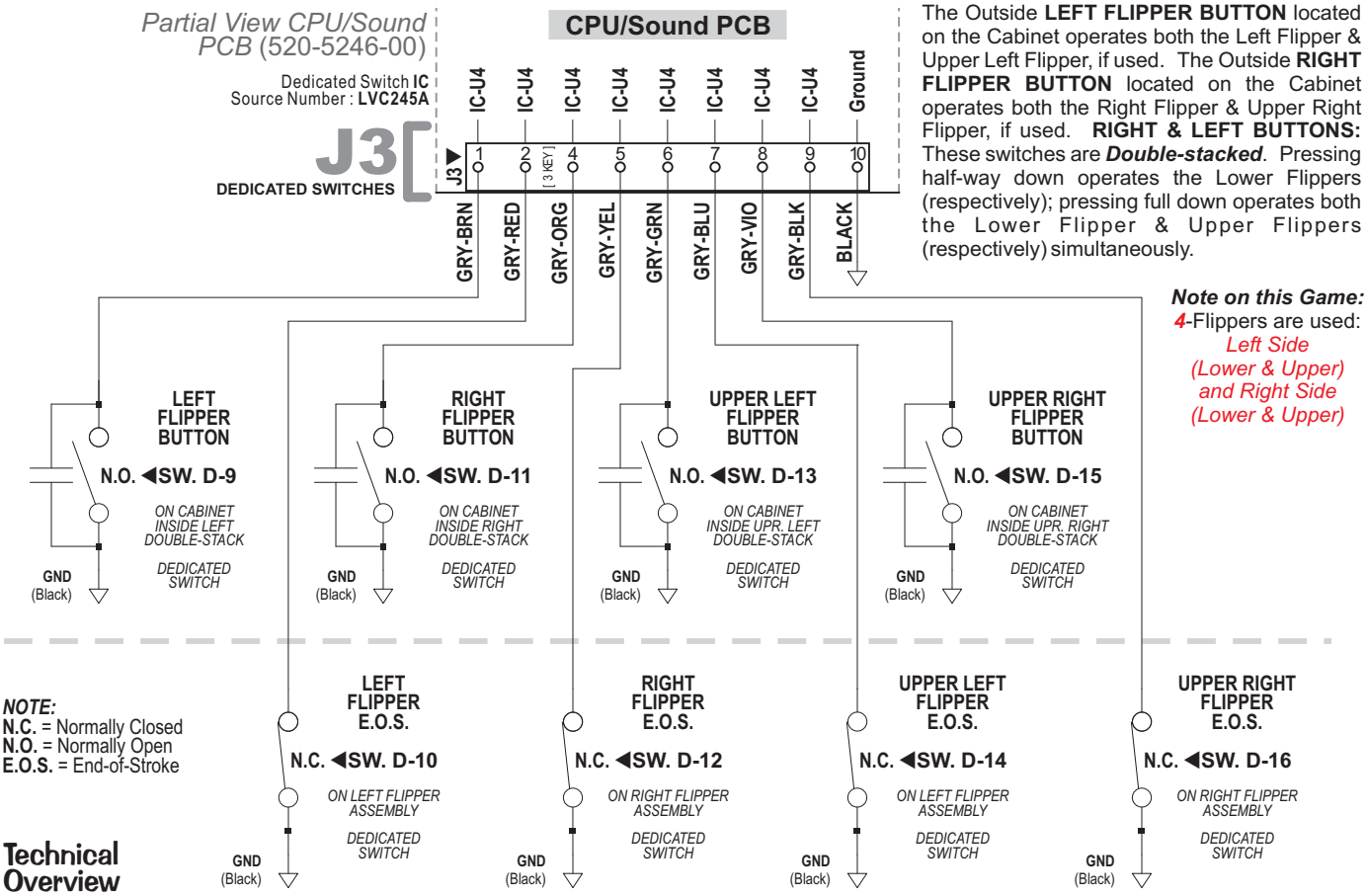

The Outside **LEFT FLIPPER BUTTON** located on the Cabinet operates both the Left Flipper & Upper Left Flipper, if used. The Outside **RIGHT FLIPPER BUTTON** located on the Cabinet operates both the Right Flipper & Upper Right Flipper, if used. **RIGHT & LEFT BUTTONS:** These switches are ***Double-stacked***. Pressing half-way down operates the Lower Flippers (respectively); pressing full down operates both the Lower Flipper & Upper Flippers (respectively) simultaneously.

Note on this Game:
4-Flippers are used:
Left Side (Lower & Upper) and Right Side (Lower & Upper)

Technical Overview

Our ***Flipper System*** uses one supply voltage (+50VDC) for both ***kick*** & ***hold***. Once the **Game CPU** detects a Flipper Cabinet Switch closure *(during game play)* it applies a 40*msec* pulse to the gate of the Flipper Drive Transistor (STP22NE10L). If it continues to detect a Flipper Cabinet Switch closure *(the player holding the button in)* it will continue to pulse the flipper drive transistor 1*msec* every 12*msecs* for the duration of the hold cycle.

The **E.O.S.** (End-Of-Stroke) **Switch** serves the same function as before as it prevents foldback when the player has the flipper energized to capture balls. The **E.O.S. Dedicated Switch** is a normally closed switch which opens approximately 1/16" when the flipper is energized. The **Game CPU** will detect a switch closure if the flipper bat is forced back by a high velocity shot or rebound on the playfield and will apply another 40*msec* pulse of 50VDC to the coil.

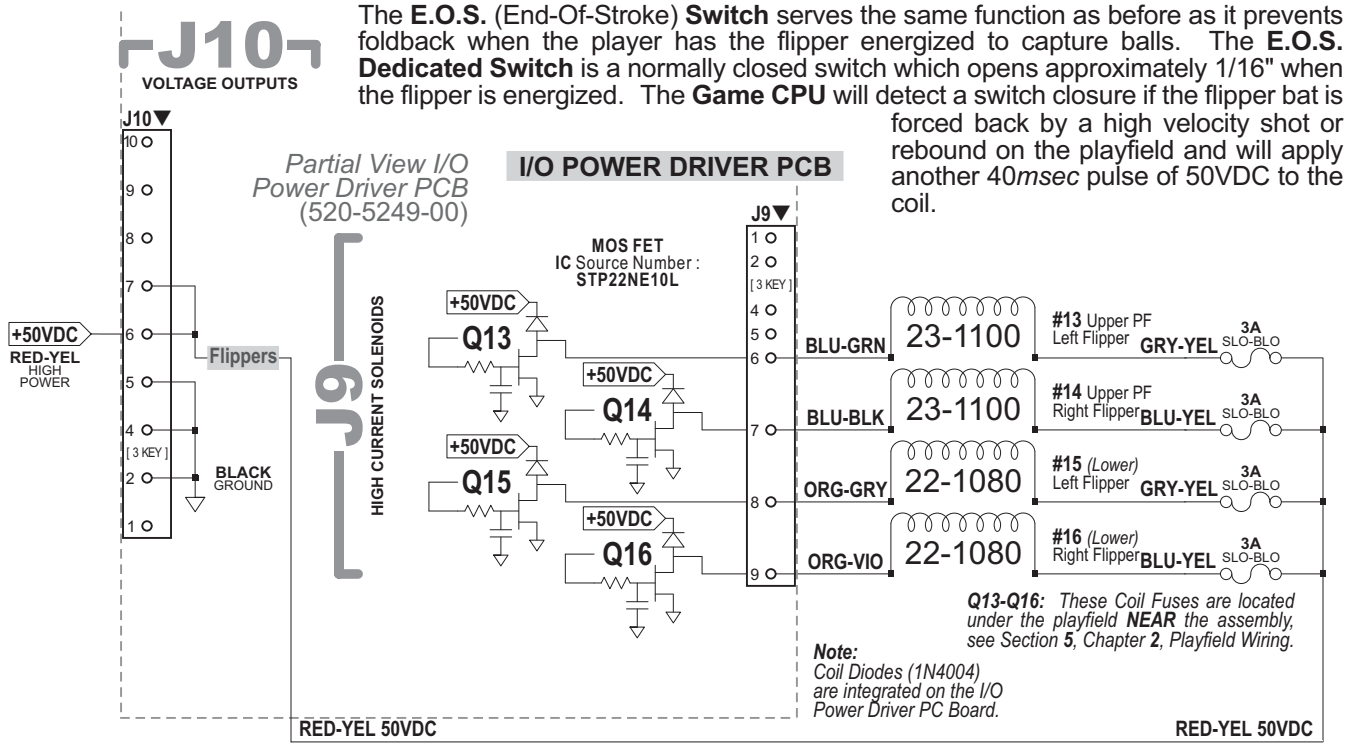

Cabinet and Coin Door Wiring

Transformer Power Wiring Diagram

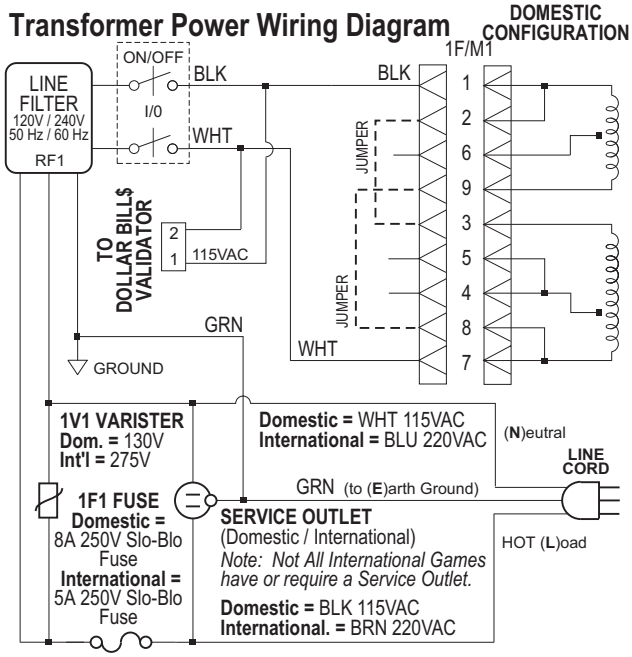

▼ Jumper Configurations for Voltage Variations ▼

N. AMERICA LINE VOLTAGE
110VAC / 120VAC

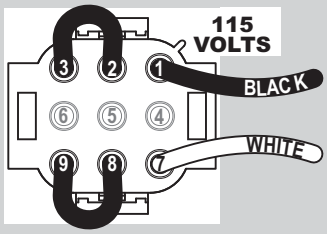

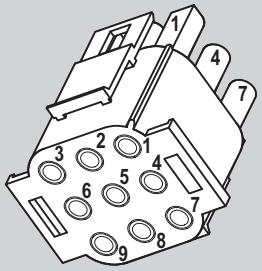

*9-PIN CONN. ▲ **BACK VIEW***
black & white wires from the POWER BOX, cabinet bottom.

INTERNATIONAL *or*
HIGH LINE VOLTAGE
230VAC / 218VAC / 206VAC

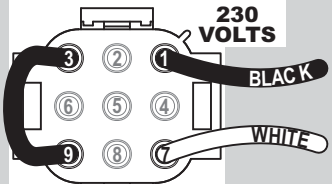

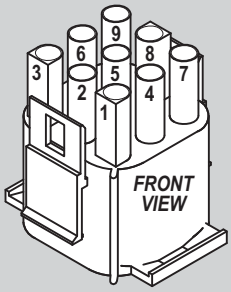

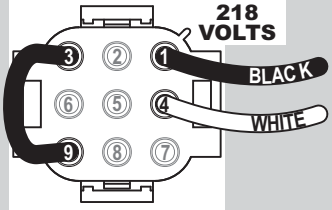

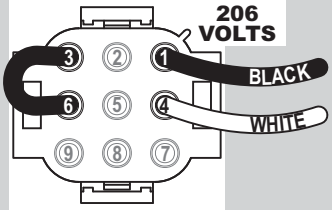

JAPAN *or*
LOW LINE VOLTAGE
100VAC / 105VAC

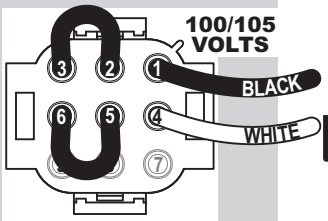

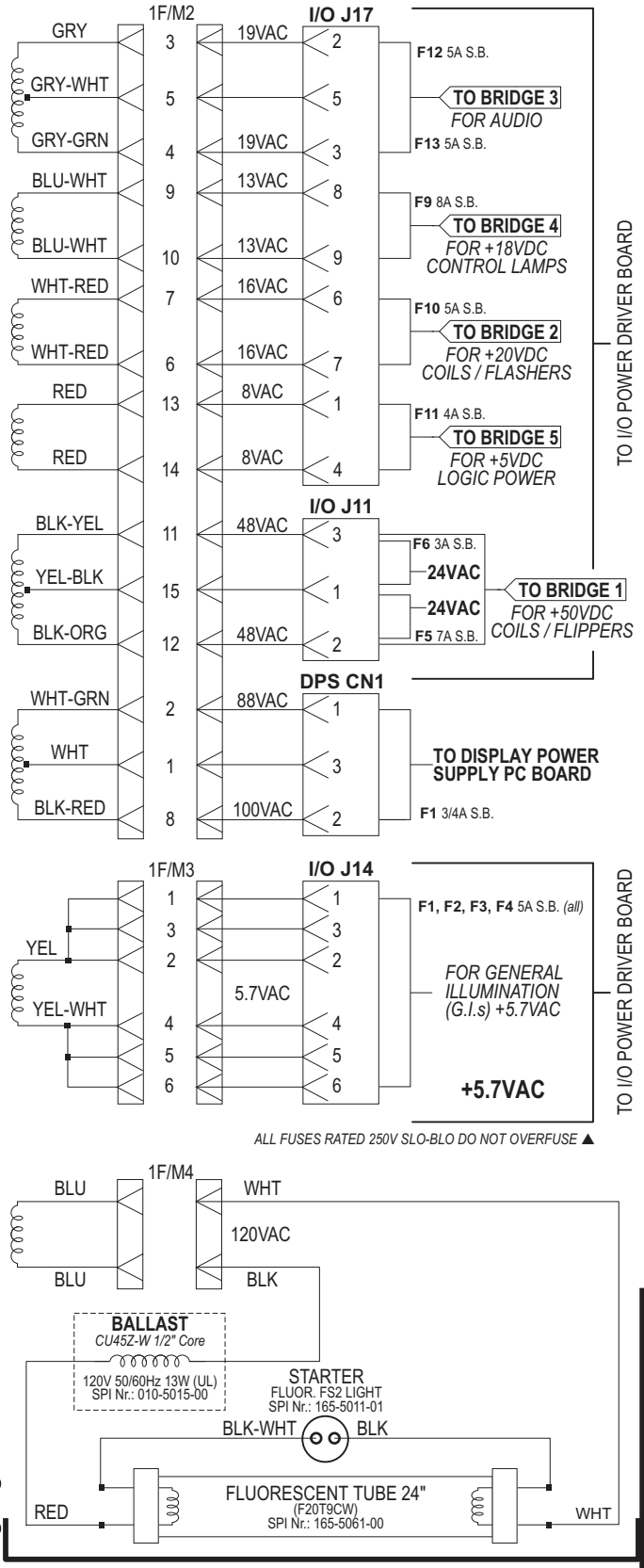

FLUORESCENT TUBE, STARTER & BALLAST
LOCATED IN THE BACKBOX

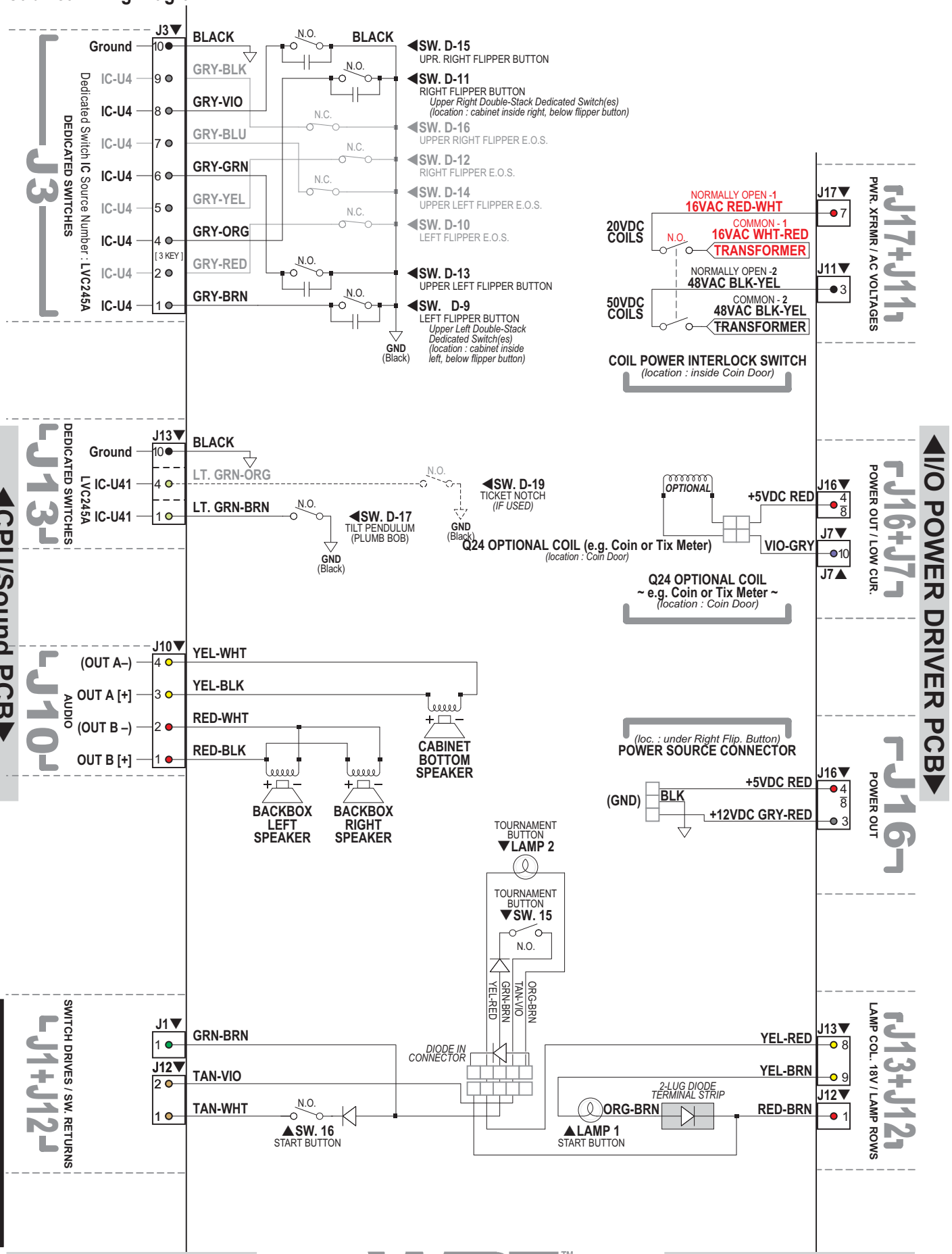
J3
Ground
IC-U4
DEDICATED SWITCHES
Dedicated Switch IC Source Number : LVC245A
[3 KEY]
BLACK
GRY-BLK
GRY-VIO
GRY-BLU
GRY-GRN
GRY-YEL
GRY-ORG
GRY-RED
GRY-BRN
N.O.
N.C.
SW. D-15
UPR. RIGHT FLIPPER BUTTON
SW. D-11
RIGHT FLIPPER BUTTON
Upper Right Double-Stack Dedicated Switch(es)
(location : cabinet inside right, below flipper button)
SW. D-16
UPPER RIGHT FLIPPER E.O.S.
SW. D-12
RIGHT FLIPPER E.O.S.
SW. D-14
UPPER LEFT FLIPPER E.O.S.
SW. D-10
LEFT FLIPPER E.O.S.
SW. D-13
UPPER LEFT FLIPPER BUTTON
SW. D-9
LEFT FLIPPER BUTTON
Upper Left Double-Stack Dedicated Switch(es)
(location : cabinet inside left, below flipper button)
GND (Black)
J17+J11
PWR. XFRMR / AC VOLTAGES
NORMALLY OPEN -1
16VAC RED-WHT
20VDC COILS
COMMON - 1
16VAC WHT-RED
TRANSFORMER
NORMALLY OPEN -2
48VAC BLK-YEL
50VDC COILS
COMMON - 2
48VAC BLK-YEL
TRANSFORMER
COIL POWER INTERLOCK SWITCH
(location : inside Coin Door)
I/O POWER DRIVER PCB
CPU/Sound PCB
J13
DEDICATED SWITCHES
LVC245A
LT. GRN-ORG
LT. GRN-BRN
SW. D-19
TICKET NOTCH
(IF USED)
SW. D-17
TILT PENDULUM
(PLUMB BOB)
J16+J7
POWER OUT / LOW CUR.
OPTIONAL
+5VDC RED
VIO-GRY
Q24 OPTIONAL COIL (e.g. Coin or Tix Meter)
(location : Coin Door)
Q24 OPTIONAL COIL
~ e.g. Coin or Tix Meter ~
(location : Coin Door)
J10
AUDIO
(OUT A–)
OUT A [+]
(OUT B –)
OUT B [+]
YEL-WHT
YEL-BLK
RED-WHT
RED-BLK
CABINET BOTTOM SPEAKER
BACKBOX LEFT SPEAKER
BACKBOX RIGHT SPEAKER
(loc. : under Right Flip. Button)
POWER SOURCE CONNECTOR
(GND)
BLK
+12VDC GRY-RED
J16
POWER OUT
TOURNAMENT BUTTON
LAMP 2
TOURNAMENT BUTTON
SW. 15
YEL-RED
GRN-BRN
TAN-VIO
ORG-BRN
J1+J12
SWITCH DRIVES / SW. RETURNS
J1
J12
GRN-BRN
TAN-VIO
TAN-WHT
DIODE IN CONNECTOR
SW. 16
START BUTTON
2-LUG DIODE TERMINAL STRIP
ORG-BRN
LAMP 1
START BUTTON
J13+J12
LAMP COL. 18V / LAMP ROWS
YEL-RED
YEL-BRN
RED-BRN
Sec. 5: Cab. & Coin
▲CPU/Sound PCB▲
▲I/O POWER DRIVER PCB▲

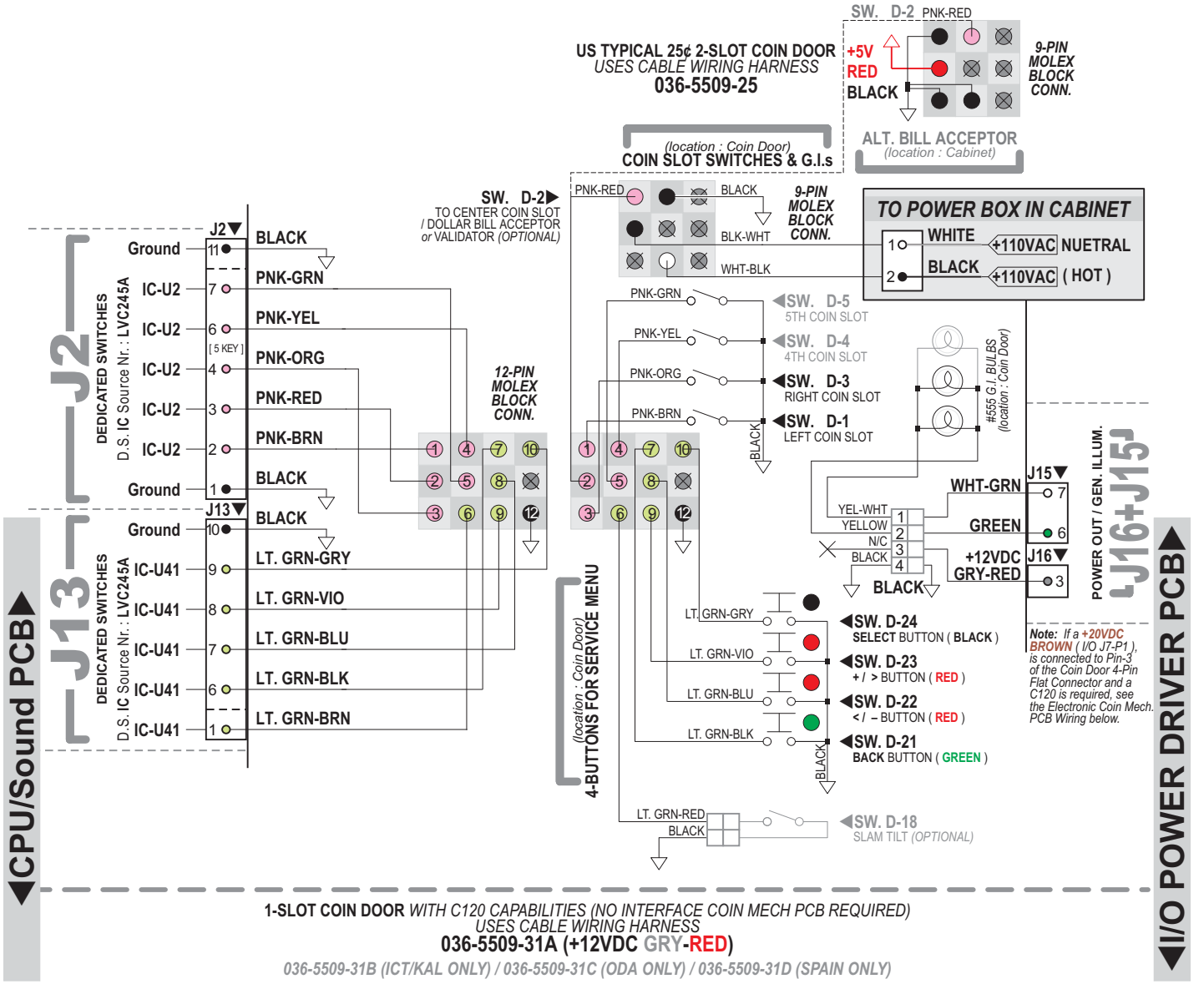

1-SLOT COIN DOOR *WITH C120 CAPABILITIES (NO INTERFACE COIN MECH PCB REQUIRED)*
USES CABLE WIRING HARNESS
036-5509-31A (+12VDC GRY-RED)

036-5509-31B (ICT/KAL ONLY) / 036-5509-31C (ODA ONLY) / 036-5509-31D (SPAIN ONLY)

NON-US NON-C120 2-SLOT COIN DOOR
USES CABLE WIRING HARNESS
036-5509-32

NON-US NON-C120 3-SLOT COIN DOOR
USES CABLE WIRING HARNESS
036-5509-33

IF YOUR GAME HAS AN ELECTRONIC COIN MECH. INTERFACE PC BOARD (520-5193-00):

1-SLOT COIN DOOR *USE WITH C120 CAPABILITIES REQUIRING PCB 520-5193-00*
USES CABLE WIRING HARNESS
036-5509-31 (S.A.M. SYSTEM)

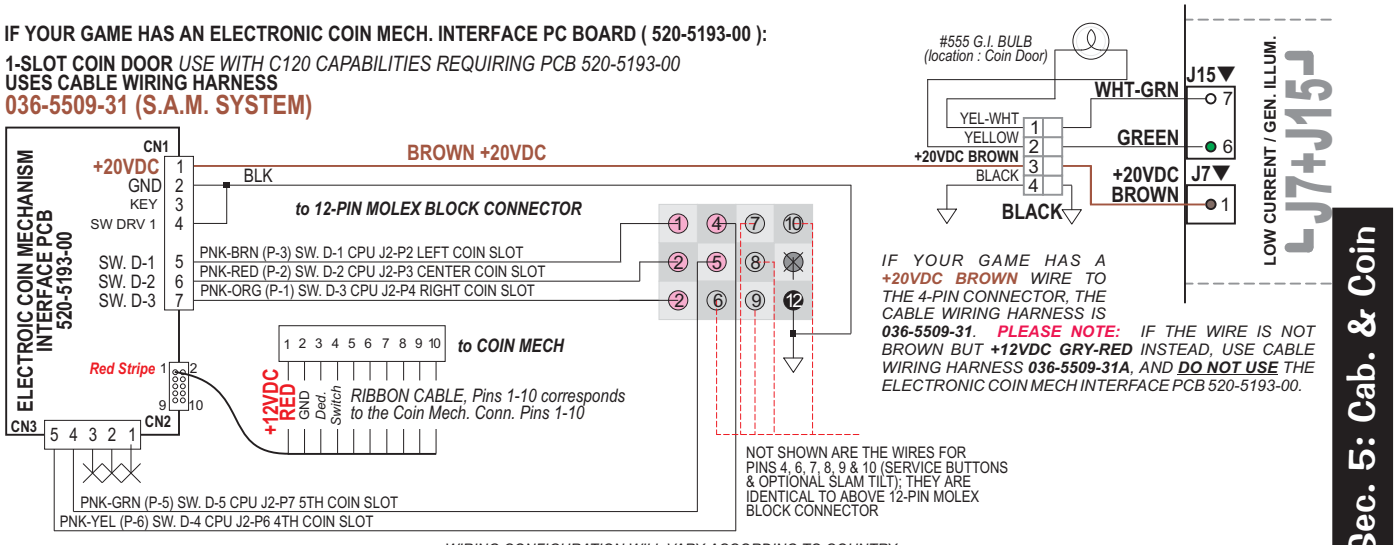

~ WIRING CONFIGURATION WILL VARY ACCORDING TO COUNTRY ~

Sec. 5: Cab. & Coin

Printed Circuit Boards (PCBs)

Trough Up-Kicker Dual OPTO PCBs (515-0173-00 & 515-0174-00) Theory of Op. & Schematic

As light from the **Transmitter LED1** falls on the **Receiver LED1**, it generates a Positive Bias Voltage (0.7v to 1.5v) which is applied to the **Gate** (**G**) of **Q1 (Fet 2N5460)** turning **Q1** off. When **Q1** is held off, no current flows through **Q2**'s **(2N3906) Base** (**B**). With no *base current,* **Q2** is off and acts as an *OPEN SWITCH*. When the light is interrupted *(BLOCKED)* **R1** (Rec. Bd.) bleeds the gate voltage off of **Q1** allowing it to conduct, switching **Q2** on, which acts as a *CLOSED SWITCH*. The **LED2 (Trans/Rec) Circuit** operates identical as the **LED1 Circuit**.

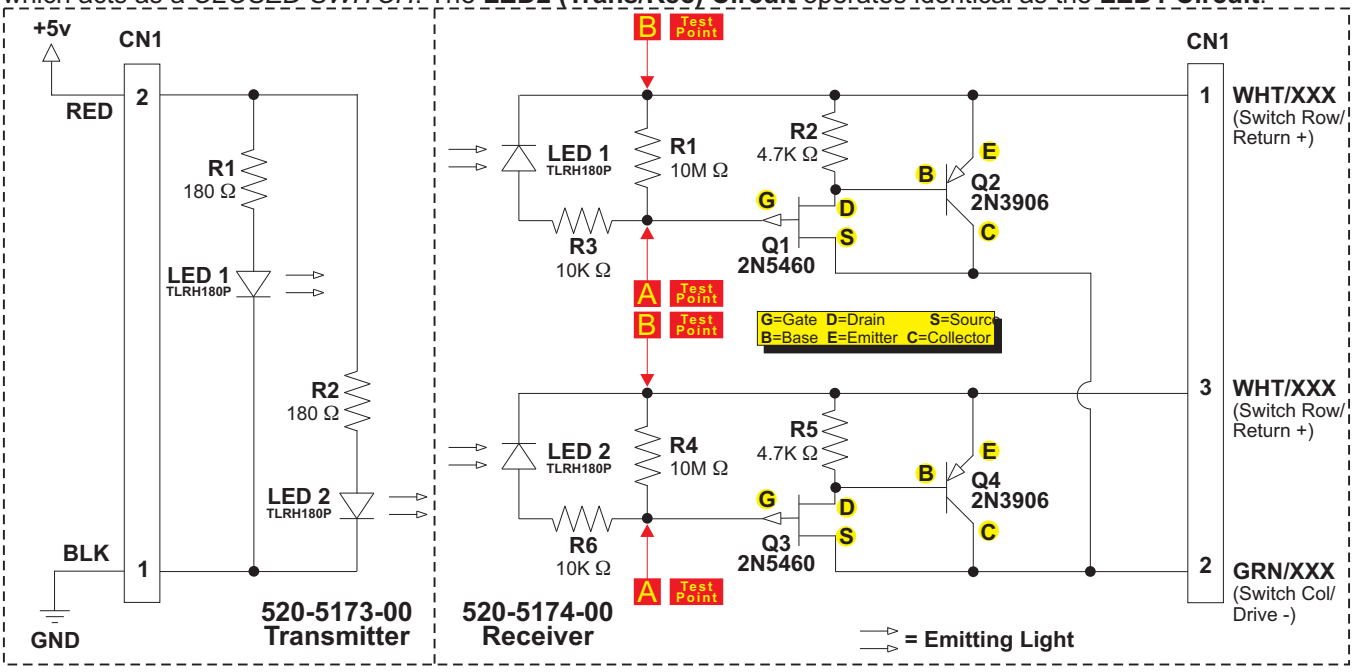

Trough Up-Kicker Dual OPTO PCBs (515-0173-00 & 515-0174-00) Component Layout & Parts

520-5173-00 (TRANS) Boards Actual Size 520-5174-00 (REC)

(Screened Text Printed Larger for Clarity)

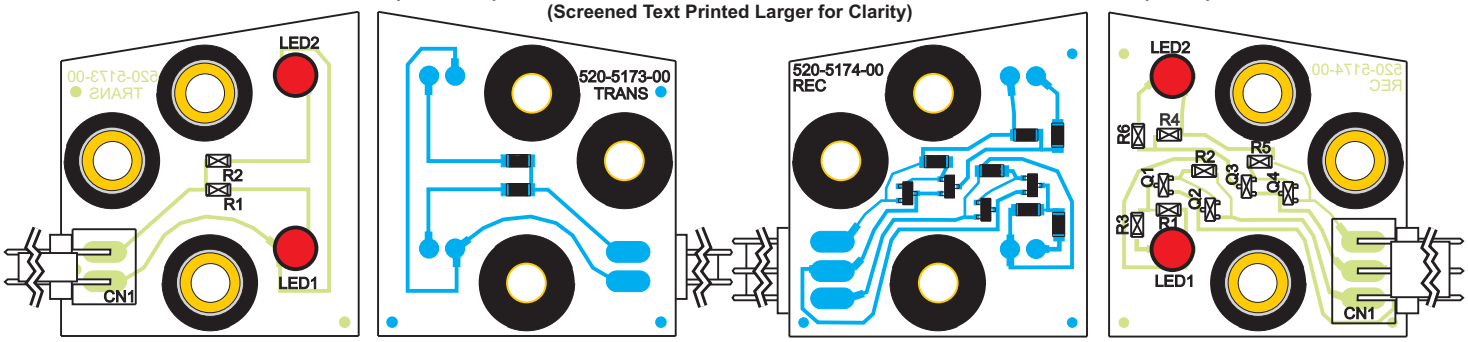

Front Side (LEDs & 2-Pin Connector) | Back Side (Solder / Surface Mounts) | Back Side (Solder / Surface Mounts) | Front Side (LEDs & 3-Pin Connector)

ITEM	QTY	PART NUMBER	REF-DESIGNATOR
A	**1**	**515-0173-00**	**Dual-OPTO Trans. Bd. Assy.**
—	**1**	**520-5173-00**	**Dual-OPTO Trans. Board**
01	1	045-5111-02	CN1
02	**2**	**165-5052-00**	**LED1, LED2**
03	2	121-5067-00	R1, R2
04	3	530-5308-02	n/a
05	3	545-5518-00	n/a
B	**1**	**515-0174-00**	**Dual-OPTO Rec. Bd. Assy.**
—	**1**	**520-5174-00**	**Dual-OPTO Rec. Board**
01	1	045-5111-03	CN1
02	**2**	**165-5052-00**	**LED 1, LED 2**
03	2	110-5006-00	Q1, Q3
04	2	110-0086-00	Q2, Q4
05	2	121-5082-00	R1, R4
06	2	121-5083-00	R2, R5
07	2	121-5011-00	R3, R6
08	3	530-5308-02	n/a
09	3	545-5518-00	n/a

Replacement Part:
LED TLRH180P
(T1-3/4 GaAlAs)
SPI Part №:
165-5052-00

DESCRIPTION
PCB Assy. (with all **Items 1-5**)
PCB Assy. (with Items **1-3** only)
2X, .156" Rt. Angle (26-60-5020) Conn.
LED TLRH180P (**Ultra Bright Red**)
180 Ω 1/8W Chip Res. (CRCW)
OPTO PCB Brass Tube Spacer
OPTO PCB Rubber Grommet
PCB Assy. (with all **Items 1-9**)
PCB Assy. (with **Items 1-7** only)
3X, .156" Rt. Angle (26-60-5030) Conn.
LED TLRH180P (**Ultra Bright Red**)
2N5460, Transistor (P-FET SOT-23)
2N3906, Transistor
10M Ω 1/8W Chip Res. (CRCW)
4.7K Ω 1/8W Chip Res. (CRCW)
10K Ω 1/8W Chip Res. (CRCW)
OPTO PCB Brass Tube Spacer
OPTO PCB Rubber Grommet

OPTO Troubleshooting

1. Volt Meter Test (indicates normal operating condition):

A. **OPEN OPTO** (Light Falling on LED) = *SWITCH OPEN*. Place meter leads across points **A** and **B** on the **LED1 Circuit** *(Refer to Schematic Drawing on previous page, 520-5174-00 Receiver Side).* It should read approximately 0.8 - 1.2v DC. The **LED2 Circuit** operates the same.

B. **CLOSED OPTO** (Light Blocked) = *SWITCH CLOSED*. Place meter leads across points **A** and **B** on the **LED1 Circuit** *(Refer to Schematic Drawing on previous page, 520-5174-00 Receiver Side).* It should read approximately 0.0 - 0.1v DC. The **LED2 Circuit** operates the same.

2. Oscilloscope Test (indicates normal operating condition):

Fig. A

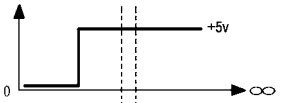

Fig. B

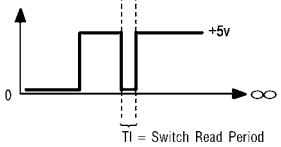

A. **OPEN OPTO** (Light Falling on LED) = *SWITCH OPEN*. Place Scope lead at **Pin-1** of OPTO Rec. Board with Scope Grounded (see Schematic). The Scope should display a **STEADY +5v** as shown in **Fig. A**, Wave Form Diagram.

B. **CLOSED OPTO** (Light Blocked) = *SWITCH CLOSED*. Place Scope lead at **Pin-1** of OPTO Rec. Board with Scope Grounded (see Schematic). The Scope should display a **PULSE STREAM** indicating **Q2** has switched "On" as shown in **Fig. B**, Wave Form Diagram. This is your Switch Drive Pulse.

3. Bench Test (See Fig. C):

Please Note: To perform this test you must use a spare 560Ω Pull-Up Resistor, SPI Nº: 121-5047-00

Disconnect the **OPTO Transmitter / Receiver Board** from the circuit. Connect one side of a 560Ω Pull-Up Resistor to **Pin-1** of the OPTO Receiver Bd. and the other side of the resistor to a 5v DC source. Connect **Pin-2** to GND. Connect a +5v DC source to **Pin-1** of the Transmitter & GND to **Pin-2**. Align with the Receiver OPTO approx. 3" distance. Using your Volt-Meter or an Oscilloscope, monitor **Pin-1** while *BLOCKING* and *UNBLOCKING* the ***BEAM*** from the Trans. The output will be approx. +5v DC when the ***BEAM IS NOT BLOCKED*** and approx. 0v when the ***BEAM IS BLOCKED.***

Fig. C

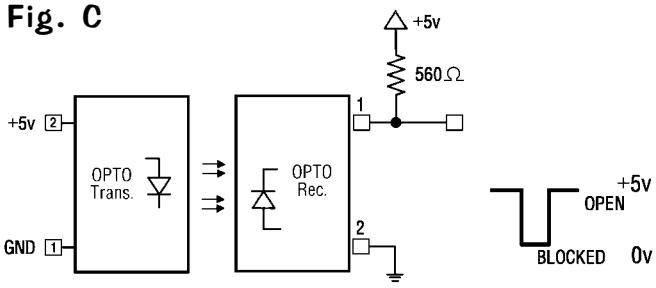

Trough Dual OPTO Boards Alignment / Test for LED1

When a working **OPTO** is installed and connected in a game, the transmitter should light *(LED1 lower & LED2 upper)* when the power is switched on. With the playfield in **Service Position #1** *(playfield lifted up in the half-way position resting on the Prop Rod or edge slide support brackets)* and the game on, the LED lights should show up as a **BRIGHT RED RINGS** through the back of the Receiver Board around the **Receivers LED1 & LED2** *(see **Fig. 1**)*. Testing only **LED1:** With the game in ***Switch Test Mode***, lifting the Trough Plunger with a fingertip should block the **BEAM** and cause the Switch Position to trigger *(see **Fig. 2**)*. View **Fig. 2a** & **2b** *(on the next page)* for a sectional view of the Light Path *(note alignment)* and what happens as a ball breaks the light beam.

Fig. 1

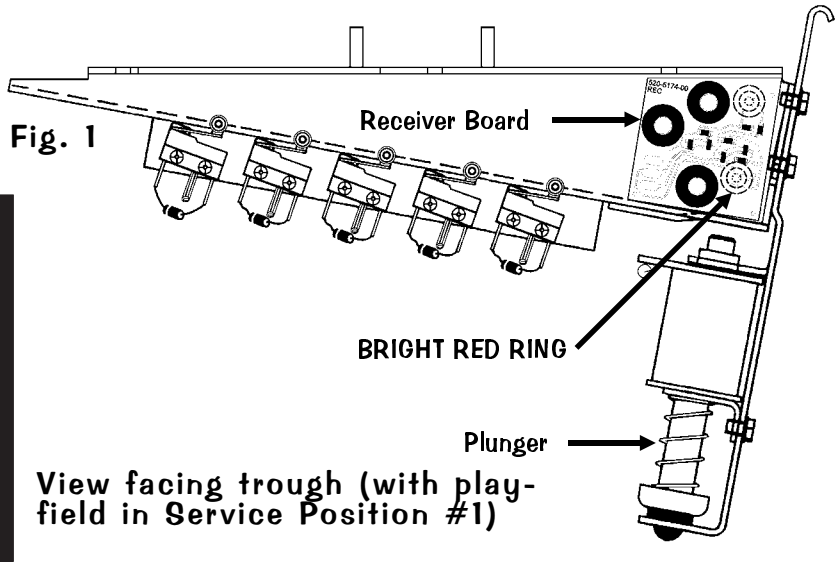

Fig. 2

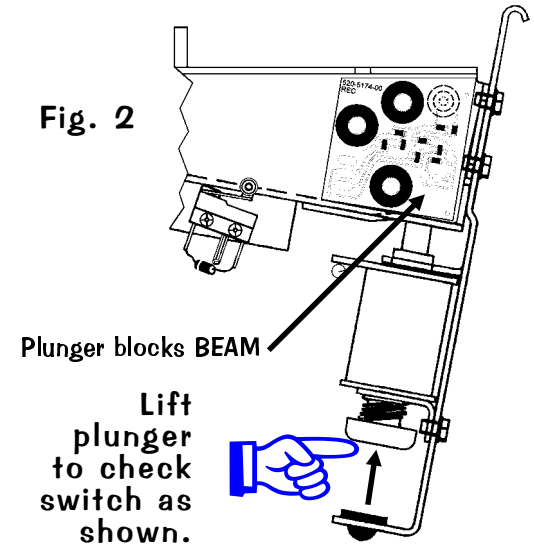

Sectional view from right (Fig. 2a & 2b)

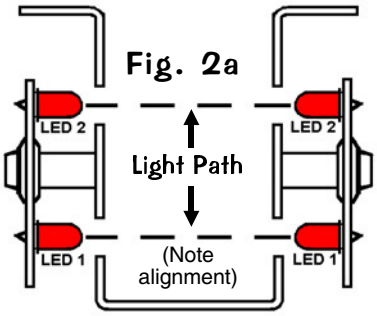

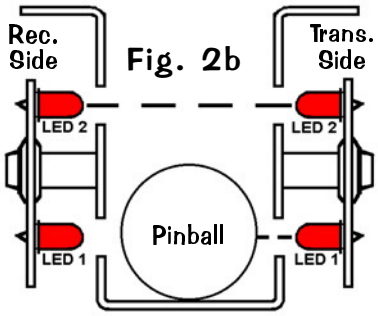

Trough Dual OPTO Boards Alignment / Test for LED2

When a working **OPTO** is installed and connected in a game, the transmitter should light *(LED1 lower & LED2 upper)* when the power is switched on. With the playfield in **Service Position #1** *(playfield lifted up and resting on the Playfield Support Slide Brackets)* and the game on, the LED lights should show up as a **BRIGHT RED RINGS** through the back of the Receiver Board around the **Receivers LED1 & LED2** *(see **Fig. 1**, previous page)*. Testing only **LED2:** *TO PERFORM THIS TEST, A PINBALL MUST BE IN THE BALL TROUGH.* With the game in ***Switch Test Mode***, lifting the Trough Plunger with a finger tip should block the **BEAM** on LED2 and cause the Switch Position to trigger *(see **Fig. 3**)*. View **Fig. 3a** & **3b** for a sectional view of the Light Path *(note alignment)* and what happens as a "double-stacked" ball scenario breaks the light beam.

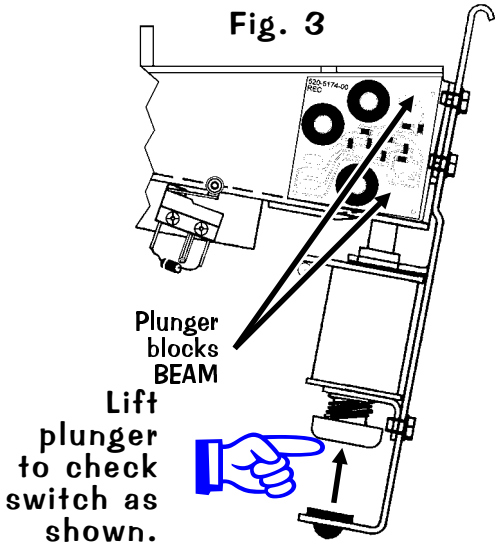

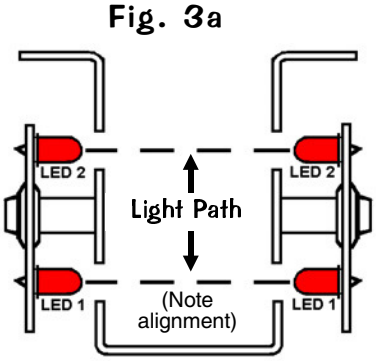

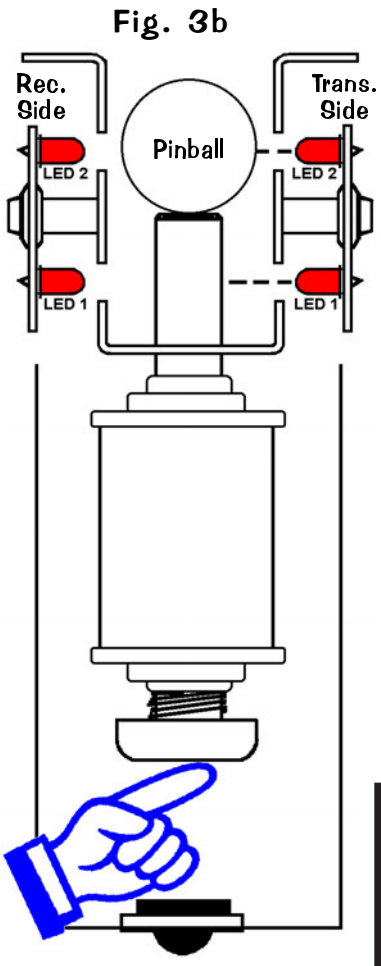

I M P O R T A N T

If replacement of ***LED** is required, insure that is **mounted correctly before and after soldering** (See **Fig. 4a / 4b**).*

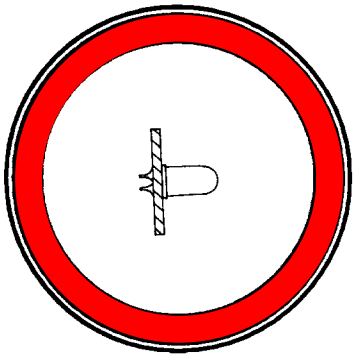

Fig. 4a
Correct Position

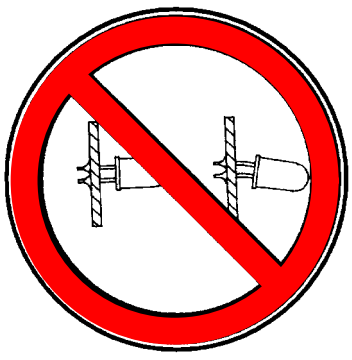

Fig. 4b
Incorrect Position

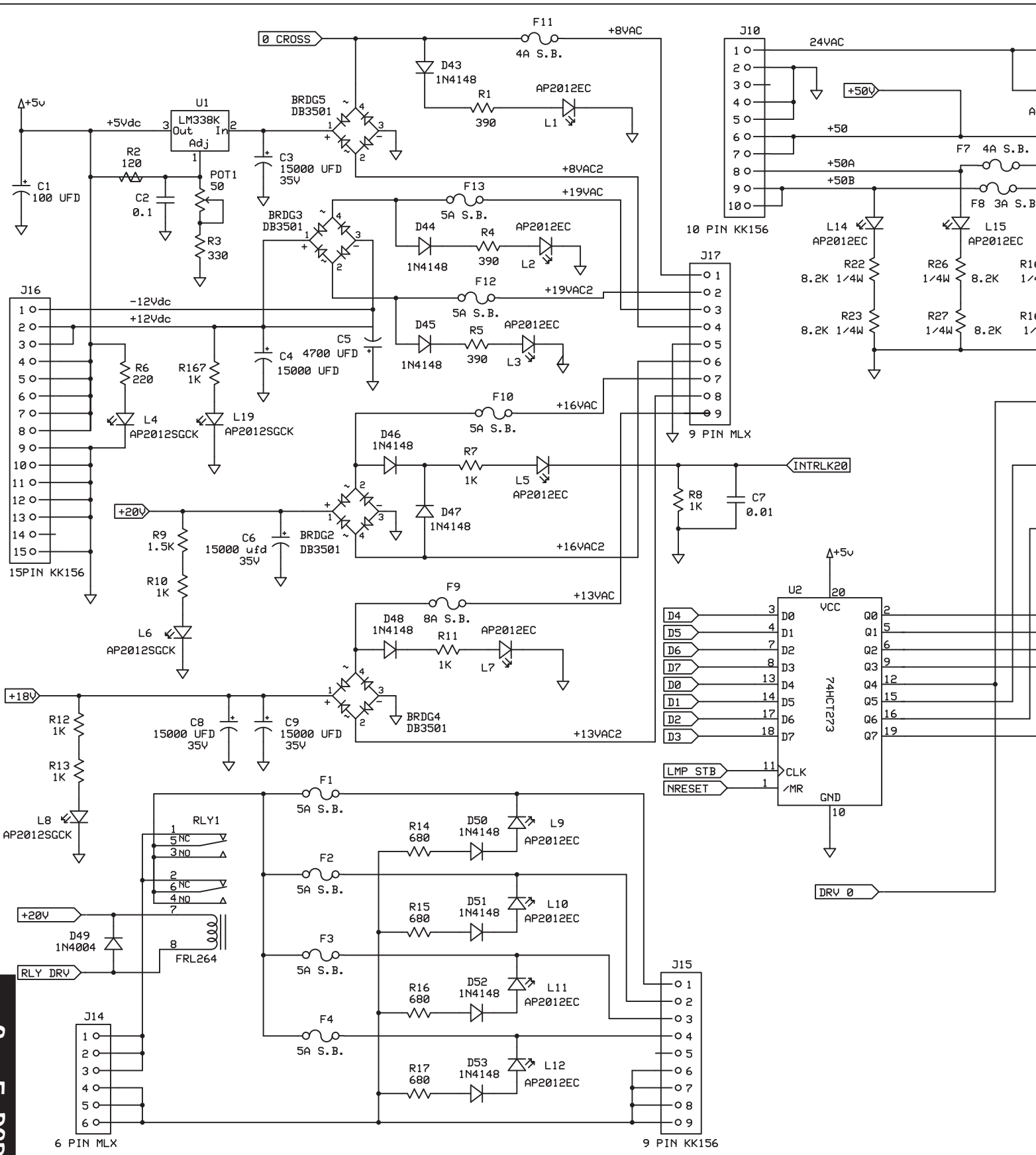
0 CROSS
F11
4A S.B.
+8VAC
D43
1N4148
R1
390
AP2012EC
L1
J10
24VAC
+50V
+50
+50A
+50B
F7 4A S.B.
F8 3A S.B.
10 PIN KK156
+5v
U1
LM338K
Out In
Adj
+5Vdc
R2
120
C1
100 UFD
C2
0.1
POT1
50
R3
330
C3
15000 UFD
35V
BRDG5
DB3501
+8VAC2
F13
5A S.B.
+19VAC
BRDG3
DB3501
D44
1N4148
R4
390
L2
F12
5A S.B.
+19VAC2
D45
1N4148
R5
390
L3
C5
C4 4700 UFD
15000 UFD
J17
9 PIN MLX
J16
-12Vdc
+12Vdc
15PIN KK156
R6
220
L4
AP2012SGCK
R167
1K
L19
AP2012SGCK
L14
AP2012EC
L15
AP2012EC
R22
8.2K 1/4W
R26
8.2K
R23
8.2K 1/4W
R27
8.2K
F10
5A S.B.
+16VAC
D46
1N4148
R7
1K
L5
AP2012EC
INTRLK20
R8
1K
C7
0.01
+20V
R9
1.5K
R10
1K
C6
15000 ufd
35V
BRDG2
DB3501
+16VAC2
L6
AP2012SGCK
F9
8A S.B.
+13VAC
D48
1N4148
R11
1K
L7
AP2012EC
+18V
R12
1K
R13
1K
C8
15000 UFD
35V
C9
15000 UFD
35V
BRDG4
DB3501
+13VAC2
L8
AP2012SGCK
U2
+5v
VCC
74HCT273
GND
D4
D5
D6
D7
D0
D1
D2
D3
Q0
Q1
Q2
Q3
Q4
Q5
Q6
Q7
LMP STB
NRESET
CLK
/MR
DRV 0
F1
5A S.B.
RLY1
NC
NO
R14
680
D50
1N4148
L9
AP2012EC
F2
5A S.B.
R15
680
D51
1N4148
L10
AP2012EC
+20V
D49
1N4004
FRL264
RLY DRV
F3
5A S.B.
R16
680
D52
1N4148
L11
AP2012EC
F4
5A S.B.
R17
680
D53
1N4148
L12
AP2012EC
J15
9 PIN KK156
J14
6 PIN MLX

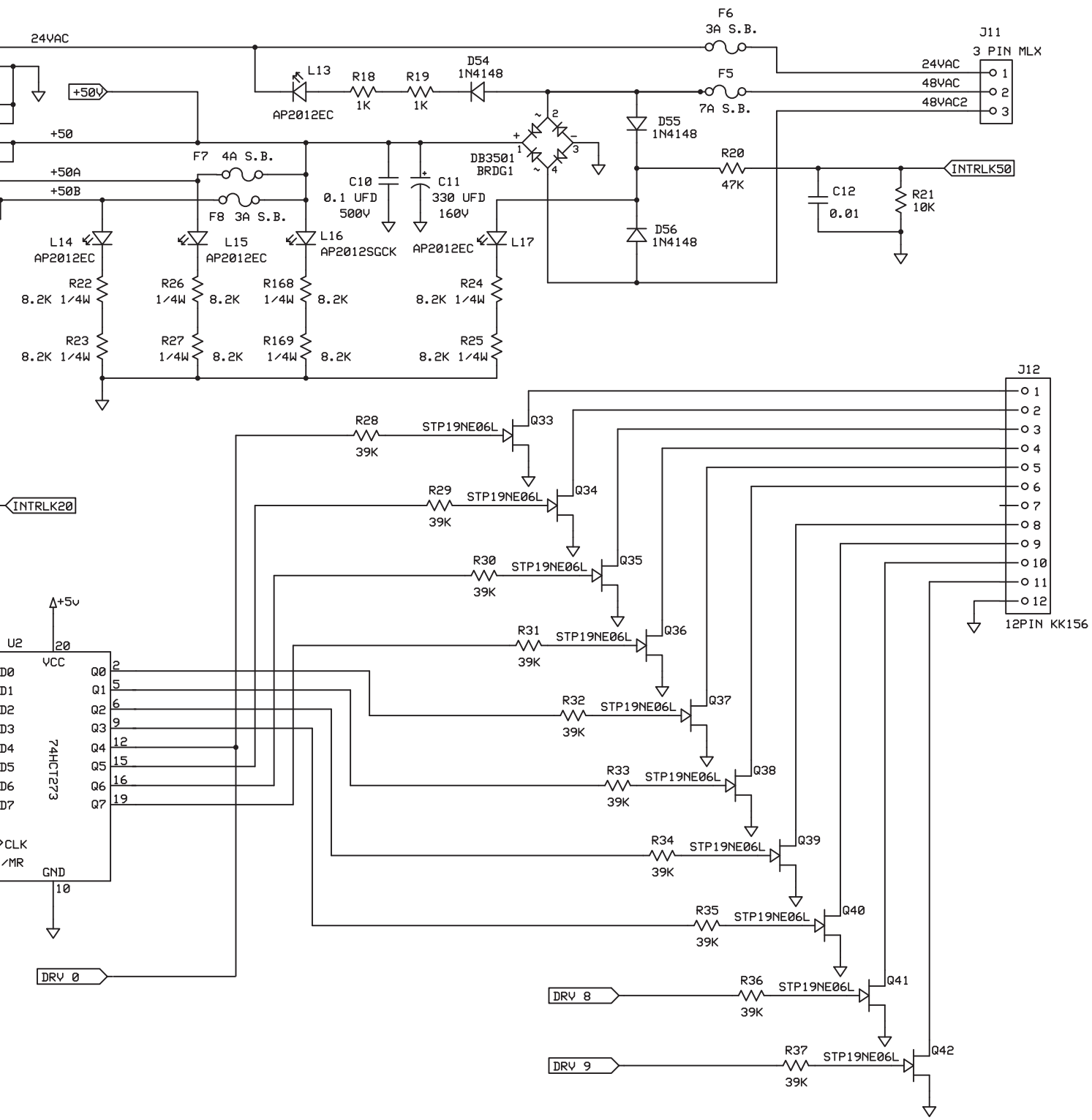

STERN PINBALL, INC.		
I/O POWER DRIVER BOARD		
520-5249-00	Rev A 5/20/2005	Page 1 of 4

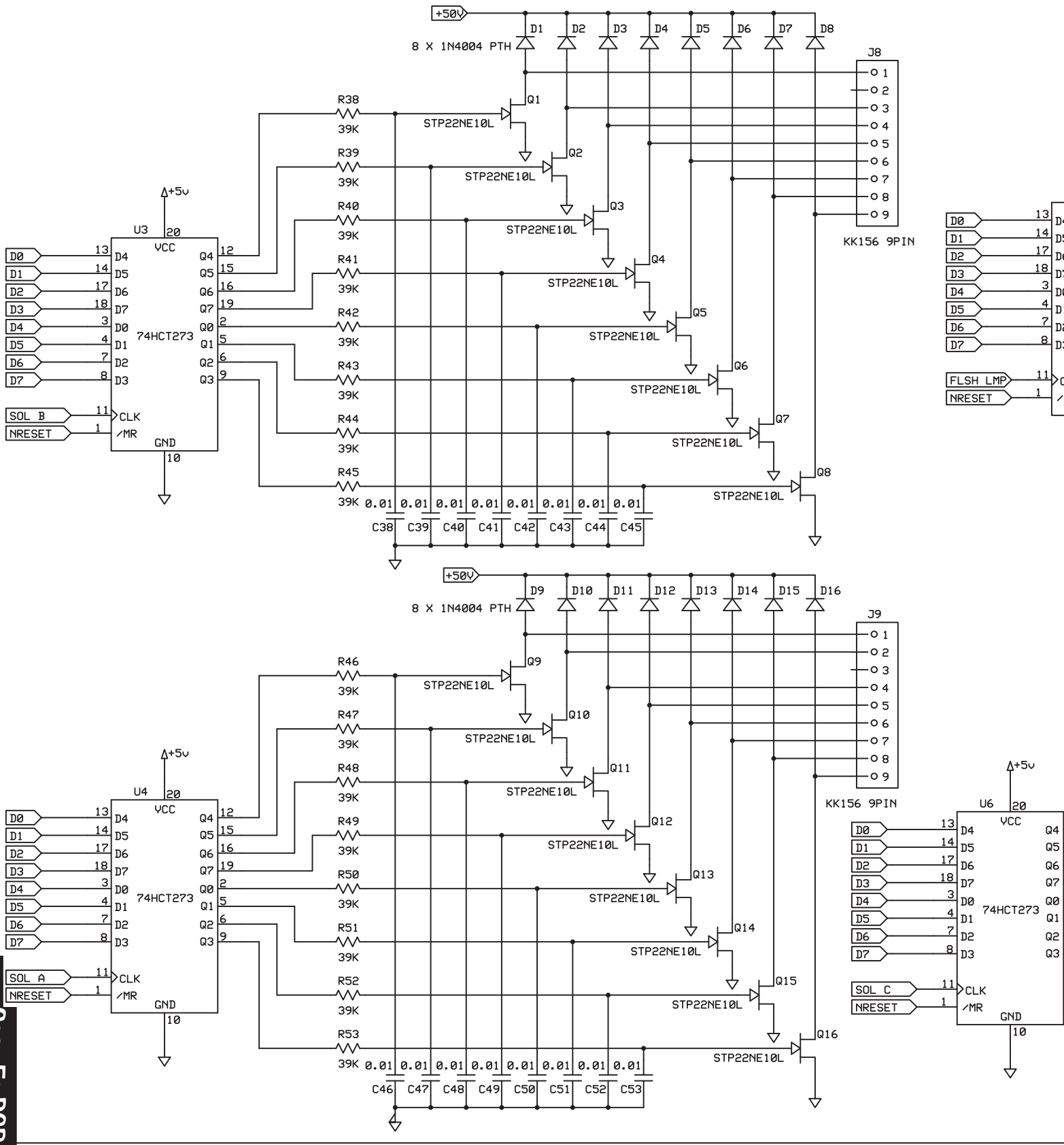
+50V
8 X 1N4004 PTH
D1 D2 D3 D4 D5 D6 D7 D8
J8
KK156 9PIN
R38 R39 R40 R41 R42 R43 R44 R45
39K
Q1 Q2 Q3 Q4 Q5 Q6 Q7 Q8
STP22NE10L
U3
74HCT273
VCC
GND
+5V
D0 D1 D2 D3 D4 D5 D6 D7
SOL B
NRESET
CLK
/MR
0.01
C38 C39 C40 C41 C42 C43 C44 C45
FLSH LMP
D9 D10 D11 D12 D13 D14 D15 D16
J9
R46 R47 R48 R49 R50 R51 R52 R53
Q9 Q10 Q11 Q12 Q13 Q14 Q15 Q16
U4
U6
SOL A
SOL C
C46 C47 C48 C49 C50 C51 C52 C53

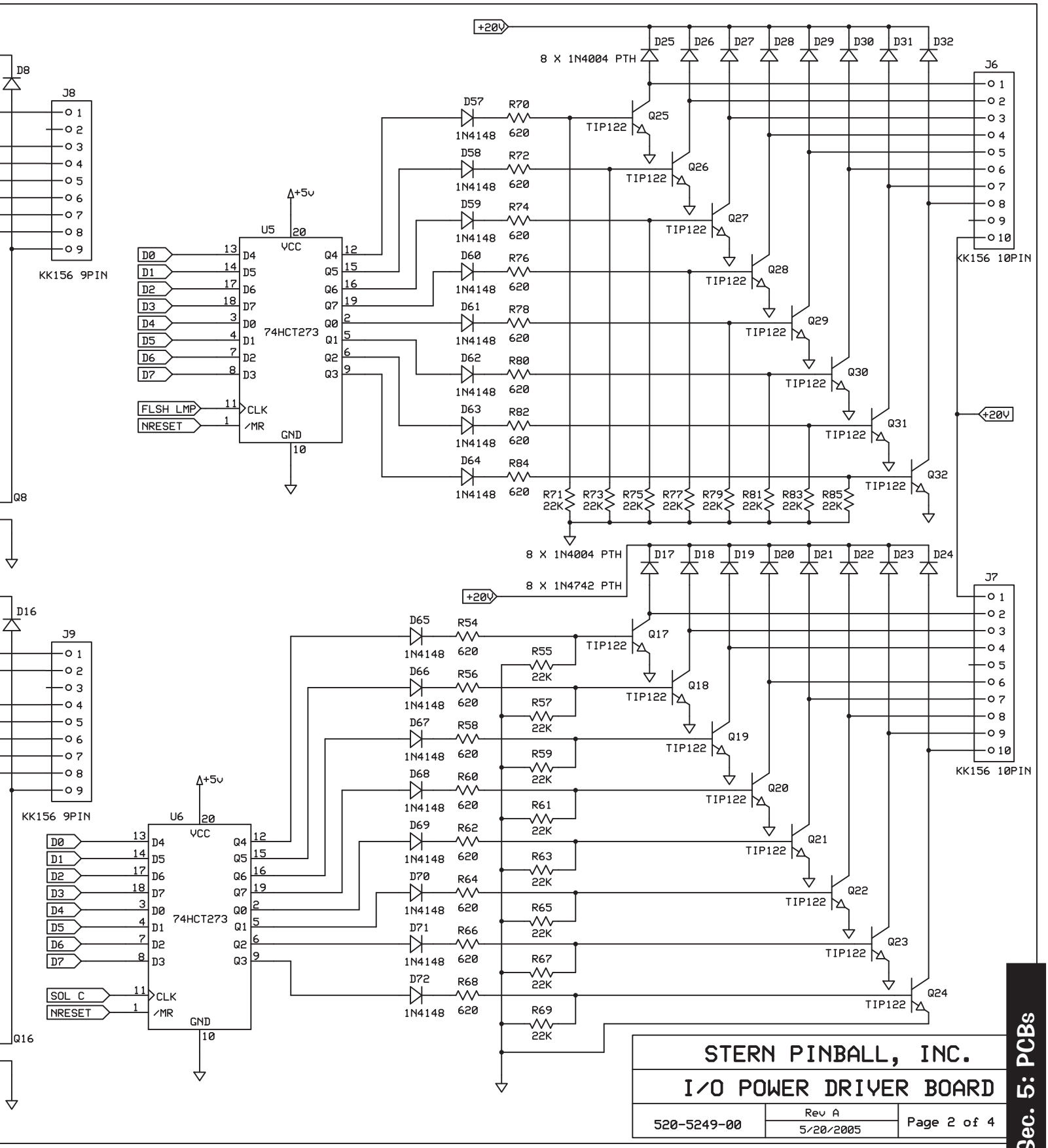

STERN PINBALL, INC.		
I/O POWER DRIVER BOARD		
520-5249-00	Rev A 5/20/2005	Page 2 of 4

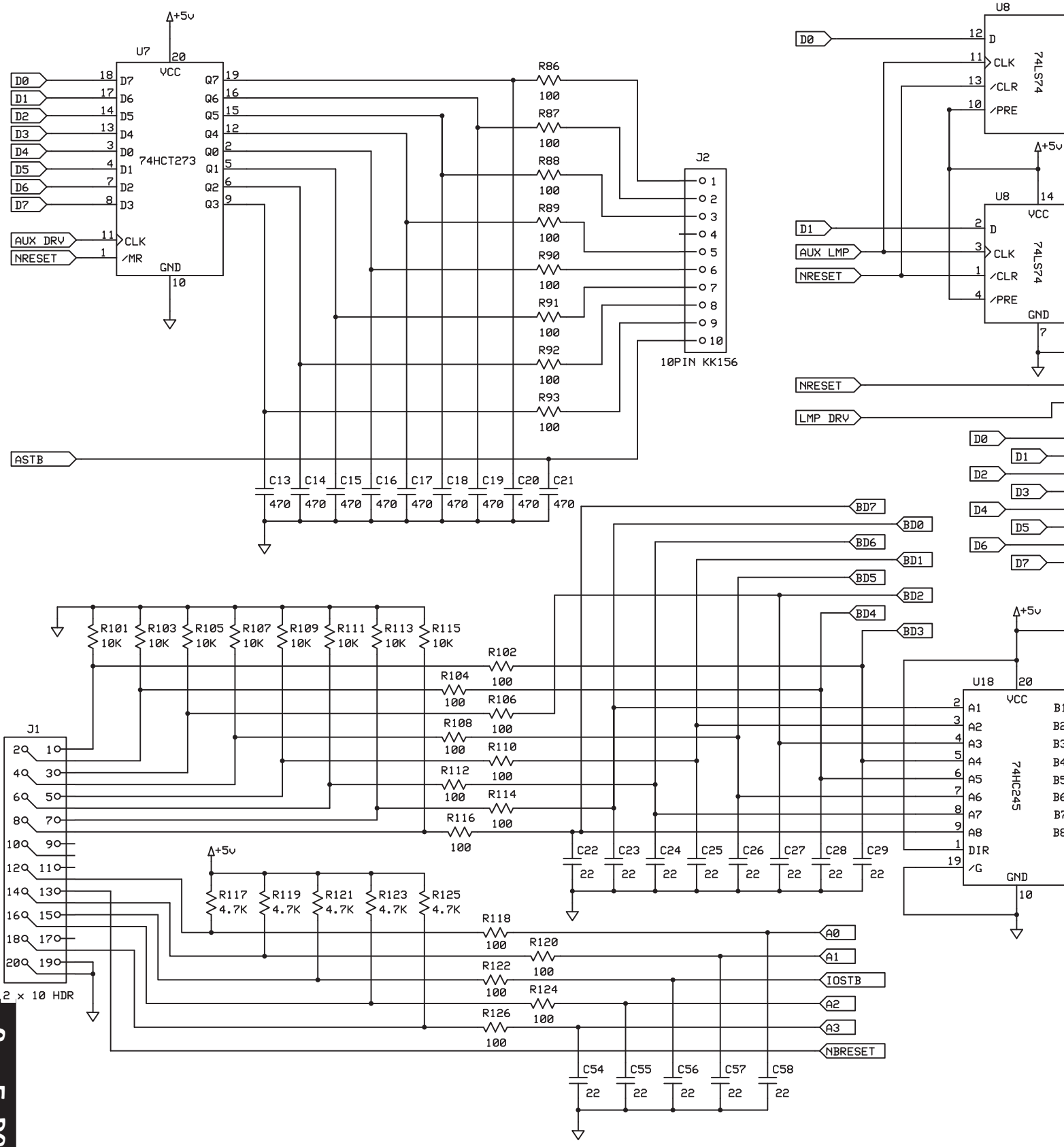
U7
74HCT273
VCC
GND
+5v
D0
D1
D2
D3
D4
D5
D6
D7
AUX DRV
NRESET
CLK
/MR
R86
R87
R88
R89
R90
R91
R92
R93
100
J2
10PIN KK156
ASTB
C13
C14
C15
C16
C17
C18
C19
C20
C21
470
U8
74LS74
/CLR
/PRE
AUX LMP
LMP DRV
BD7
BD0
BD6
BD1
BD5
BD2
BD4
BD3
R101
R103
R105
R107
R109
R111
R113
R115
10K
R102
R104
R106
R108
R110
R112
R114
R116
J1
2 x 10 HDR
U18
74HC245
A1
A2
A3
A4
A5
A6
A7
A8
DIR
/G
B1
B2
B3
B4
B5
B6
B7
B8
C22
C23
C24
C25
C26
C27
C28
C29
22
R117
R119
R121
R123
R125
4.7K
R118
R120
R122
R124
R126
A0
A1
IOSTB
A2
A3
NBRESET
C54
C55
C56
C57
C58

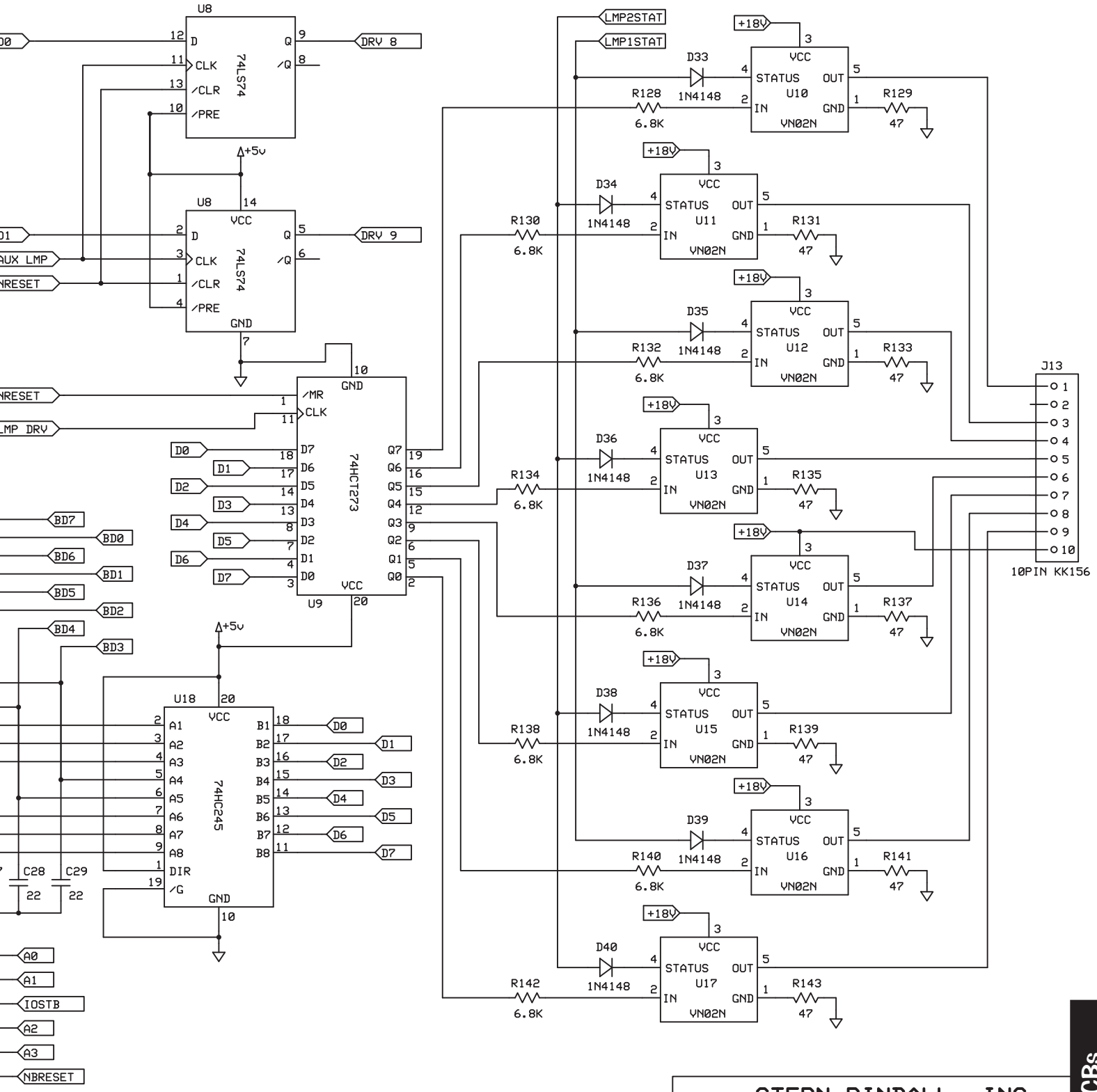

STERN PINBALL, INC.		
I/O POWER DRIVER BOARD		
520-5249-00	Rev A 5/20/2005	Page 3 of 4

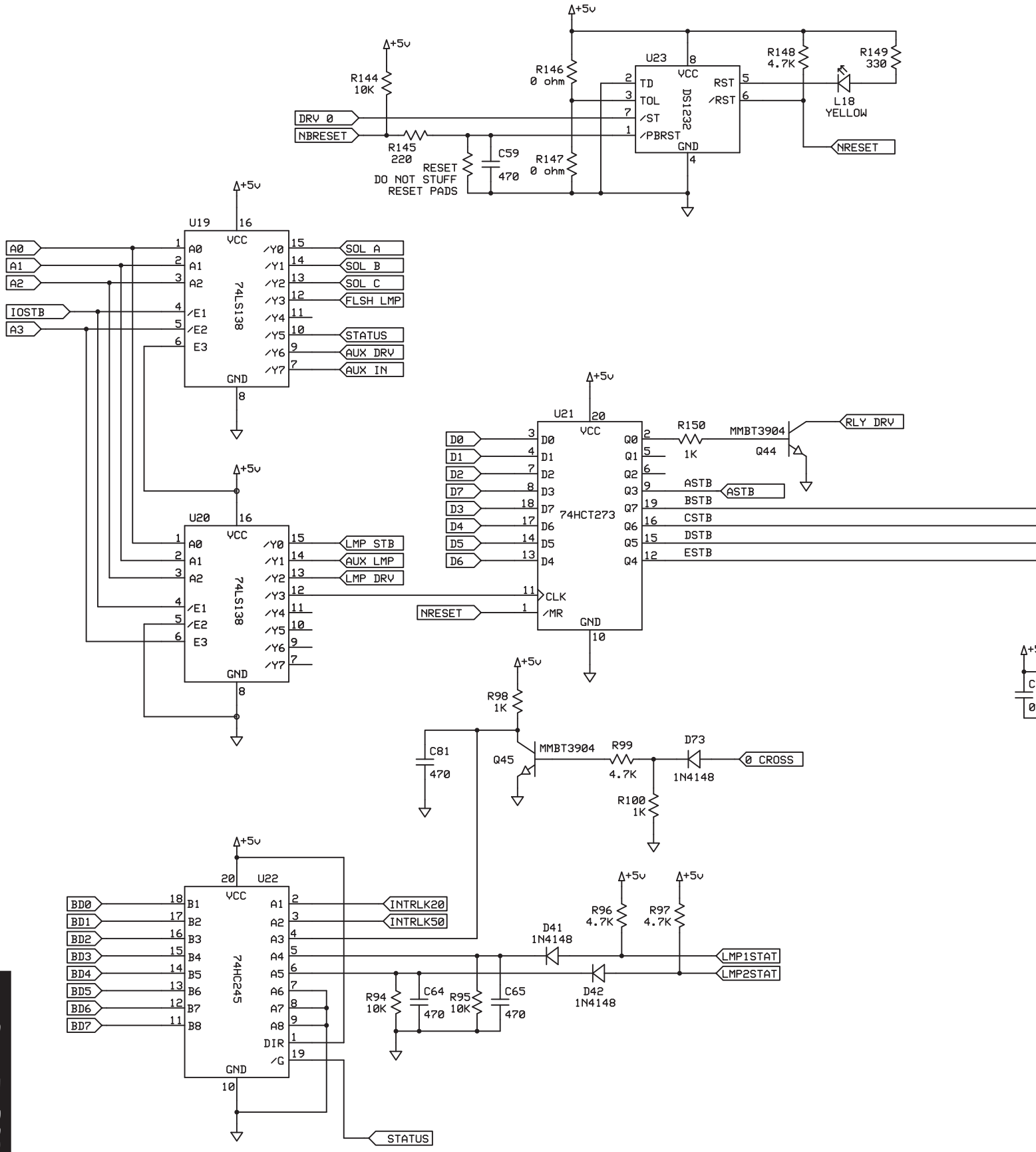
+5v
R144
10K
R146
0 ohm
U23
VCC
DS1232
TD
TOL
/ST
/PBRST
GND
RST
/RST
R148
4.7K
R149
330
L18
YELLOW
NRESET
DRV 0
NBRESET
R145
220
RESET
DO NOT STUFF
RESET PADS
C59
470
R147
0 ohm
U19
74LS138
A0
A1
A2
/E1
/E2
E3
/Y0
/Y1
/Y2
/Y3
/Y4
/Y5
/Y6
/Y7
SOL A
SOL B
SOL C
FLSH LMP
STATUS
AUX DRV
AUX IN
IOSTB
A3
U20
LMP STB
AUX LMP
LMP DRV
U21
74HCT273
D0
D1
D2
D3
D4
D5
D6
D7
Q0
Q1
Q2
Q3
Q4
Q5
Q6
Q7
CLK
/MR
R150
1K
MMBT3904
Q44
RLY DRV
ASTB
BSTB
CSTB
DSTB
ESTB
R98
1K
C81
470
Q45
R99
4.7K
D73
1N4148
0 CROSS
R100
1K
U22
74HC245
BD0
BD1
BD2
BD3
BD4
BD5
BD6
BD7
B1
B2
B3
B4
B5
B6
B7
B8
A1
A2
A3
A4
A5
A6
A7
A8
DIR
/G
INTRLK20
INTRLK50
R96
4.7K
R97
4.7K
D41
1N4148
D42
1N4148
LMP1STAT
LMP2STAT
R94
10K
C64
470
R95
10K
C65
470
STATUS

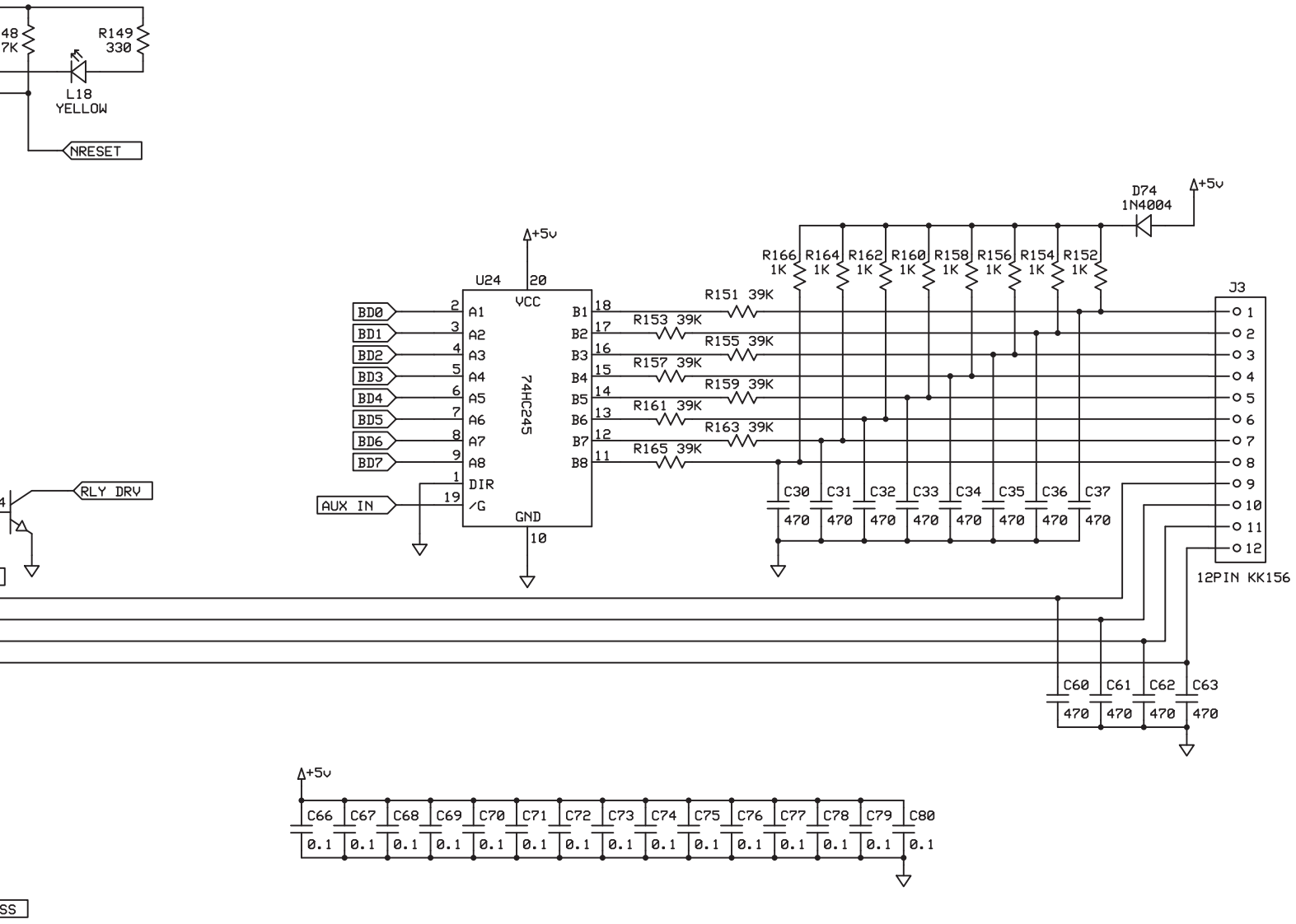

STERN PINBALL, INC.		
I/O POWER DRIVER BOARD		
520-5249-00	Rev A 5/20/2005	Page 4 of 4

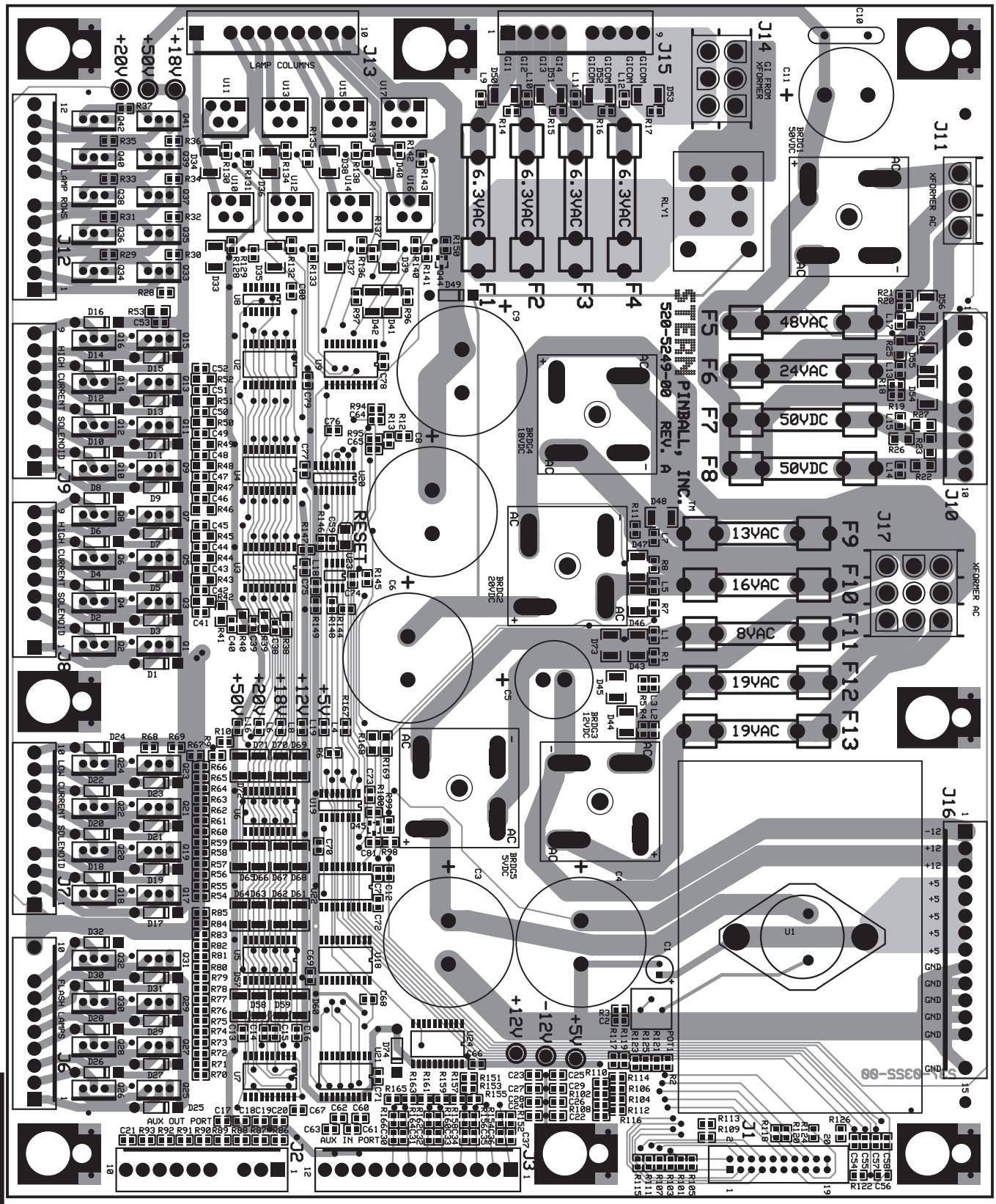

WPT™
WORLD POKER TOUR

ITEM	QTY.	SPI PART NUMBER	(MFG. P.N.)	REF-DESIGNATOR	DESCRIPTION (SM = Surface Mount)
—	**1**	**520-5249-00**		**I/O Power Driver PCB (S.A.M. System), Rev. A**	*(includes Items **1-67**)*
1	1	121-6001-00	(101-0001807)	R9	Resistor SM 0805 Film 1.5KΩ 1/10W 5%
2	22	121-6002-00	(101-0001820)	R86, R87, R88, R89, R90, R91, R92, R93, R102, R104, R106, R108, R110, R112, R114, R116, R118, R120, R122, R124, R126, R146	Resistor SM 0805 Film 100Ω 1/10W 5%
3	12	121-6020-00	(101-0001827)	R21, R94, R95, R101, R103, R105, R107, R109, R111, R113, R115, R144	Resistor SM 0805 Film 10KΩ 1/10W 5%
4	1	121-6003-00	(101-0001845)	R2	Resistor SM 0805 Film 120Ω 1/10W 5%
5	20	121-6022-00	(101-0001905)	R7, R8, R10, R11, R12, R13, R18, R19, R98, R100, R150, R152, R154, R156, R158, R160, R162, R164, R166, R167	Resistor SM 0805 Film 1KΩ 1/10W 5%
6	2	121-6004-00	(101-0001943)	R6, R145	Resistor SM 0805 Film 220Ω 1/10W 5%
7	16	121-6005-00	(101-0001849)	R55, R57, R59, R61, R63, R65, R67, R69, R71, R73, R75, R77, R79, R81, R83, R85	Resistor SM 0805 Film 22KΩ 1/10W 5%
8	2	121-6006-00	(101-0002012)	R3, R149	Resistor SM 0805 Film 330Ω 1/10W 5%
9	3	121-6007-00	(101-0002031)	R1, R4, R5	Resistor SM 0805 Film 390Ω 1/10W 5%
10	8	121-6013-00	(101-0002035)	R151, R153, R155, R157, R159, R161, R163, R165	Resistor SM 0805 Film 39KΩ 1/10W 5%
11	9	121-6008-00	(101-0002046)	R96, R97, R99, R117, R119, R121, R123, R125, R148	Resistor SM 0805 Film 4.7KΩ 1/10W 5%
12	8	121-6014-00	(101-0002065)	R129, R131, R133, R135, R137, R139, R141, R143	Resistor SM 0805 Film 47Ω 1/10W 5%
13	1	121-6015-00	(101-0002071)	R20	Resistor SM 0805 Film 47KΩ 1/10W 5%
14	8	121-6009-00	(101-0002108)	R128, R130, R132, R134, R136, R138, R140, R142	Resistor SM 0805 Film 6.8KΩ 1/10W 5%
15	16	121-6010-00	(101-0002116)	R54, R56, R58, R60, R62, R64, R66, R68, R70, R72, R74, R76, R78, R80, R82, R84	Resistor SM 0805 Film 620Ω 1/10W 5%
16	4	121-6016-00	(101-0002126)	R14, R15, R16, R17	Resistor SM 0805 Film 680Ω 1/10W 5%
17	10	121-6011-00	(101-0002296)	R28, R29, R30, R31, R32, R33, R34, R35, R36, R37	Resistor SM 1206 Film 22KΩ 1/10W 5%
18	8	121-6012-00	(101-0002473)	R22, R23, R24, R25, R26, R27, R168, R169	Resistor SM 1206 Film 8.2KΩ 1/10W 5%
19	16	121-6013-01	(101-0002378)	R38, R39, R40, R41, R42, R43, R44, R45, R46, R47, R48, R49, R50, R51, R52, R53	Resistor SM 1206 Film 39KΩ 1/10W 5%
20	16	125-6001-00	(121-0000056)	C2, C66, C67, C68, C69, C70, C71, C72, C73, C74, C75, C76, C77, C78, C79, C80	Capacitor SM 0805 Cer. .1UF 50V 10% X7R
21	25	125-6002-00	(121-0000096)	C13, C14, C15, C16, C17, C18, C19, C20, C21, C30, C31, C32, C33, C34, C35, C36, C37, C59, C60, C61, C62, C63, C64, C65, C81	Capacitor SM 0805 Cer. 470PF 50V 5% NPO
22	18	125-6003-00	(121-0004236)	C7, C12, C38, C39, C40, C41, C42, C43, C44, C45, C46, C47, C48, C49, C50, C51, C52, C53	Capacitor SM 0805 Cer. .01UF 50V 10% X7R
23	13	125-6004-00	(121-0005318)	C22, C23, C24, C25, C26, C27, C28, C29, C54, C55, C56, C57, C58	Capacitor SM 0805 Cer. 22PF 100V 5% NPO
24	1	125-5032-00	(131-0003773)	C1	Capacitor Tht. Radial Alum. 100UF 25V 20%
25	1	125-5034-00	(131-0003864)	C5	Capacitor Tht. Radial Alum. 4700UF 35V 20%
26	1	125-5029-01	(133-0003741)	C10	Capacitor Tht. Disc Cer. .1UF 500V 20%
27	1	125-6022-00	(134-0003846)	C11	Capacitor Tht. Radial Alum. 330UF 160V 20%
28	5	125-5036-01	(134-0004000)	C3, C4, C6, C8, C9	Cap. Tht. Rad. Al. 15000UF 35V 20% Snap-In
29	34	112-6001-01	(183-0004374)	D1, D2, D3, D4, D5, D6, D7, D8, D9, D10, D11, D12, D13, D14, D15, D16, D17, D18, D19, D20, D21, D22, D23, D24, D25, D26, D27, D28, D29, D30, D31, D32, D49, D74	Diode Tht. DO-41 1N4004 400V 1A
30	5	112-5000-00	(187-0004700)	BRDG1, BRDG2, BRDG3, BRDG4, BRDG5	Bridge Tht. Fullwave 100V 35A MB-35
31	10	110-0088-01	(203-0003591)	Q33, Q34, Q35, Q36, Q37, Q38, Q39, Q40, Q41, Q42	Fet Tht. TO-220 STP20NE06L NFet 60V 20A
32	16	110-0106-00	(203-0003592)	Q1, Q2, Q3, Q4, Q5, Q6, Q7, Q8, Q9, Q10, Q11, Q12, Q13, Q14, Q15, Q16	Fet Tht. TO-220 20N10L NFet 100V 20A
33	8	110-0089-00	(203-0003597)	U10, U11, U12, U13, U14, U15, U16, U17	Fet Tht. PENTAWAT VN02N NFet HighSide 26V 6A
34	2	110-0069-01	(211-0003589)	Q44, Q45	Trans. SM SOT-23 MMST3904 NPN 40V 0.2A
35	16	110-0067-00	(213-0003565)	Q17, Q18, Q19, Q20, Q21, Q22, Q23, Q24, Q25, Q26, Q27, Q28,Q29, Q30, Q31, Q32	Transistor Tht. TO-220 TIP122 NPN 100V 5A
36	3	100-6003-00	(221-0000972)	U18, U22, U24	I.C. SM SOIC 74HC245 Oct. Bus. Xcvr.
37	1	100-6000-00	(221-0011253)	U23	I.C. SM SOIC DS1832S, SO-8
38	8	100-5056-00	(221-0001287)	U2, U3, U4, U5, U6, U7, U9, U21	I.C. SM SOIC 74HCT273 Oct. D F-F
39	2	100-6001-00	(221-0003728)	U19, U20	I.C. SM SO 74LS138D Hex Inverter; 3-8 DC/DMX
40	1	100-6002-00	(221-0011135)	U8	I.C. SM SOIC 74LS74AD SOIC-14
41	1	100-0356-00	(225-0003582)	U1	I.C. Tht. TO-3 LM338 5A Adjust. Voltage Reg.
42	5	045-	(315-0003427)	J2, J6, J7, J10, J13	Con. Tht. Hdr. 10 Pin, 1 Row .156"
43	1	045-	(315-0006910)	J1	Con. Tht. Hdr. 20 Pin, 2 Row .1"
44	2	045-	(315-0003430)	J3, J12	Con. Tht. Hdr. 12 Pin, 1 Row .156"
45	1	045-	(315-0003432)	J16	Con. Tht. Hdr. 15 Pin, 1 Row .156"
46	1	045-	(315-0003503)	J11	Con. Tht. Pwr. 3 Pin, 1 Row .25"
47	1	045-	(315-0003504)	J14	Con. Tht. Pwr. 6 Pin, 2 Row .25"
48	1	045-	(315-0003505)	J17	Con. Tht. Pwr. 9 Pin, 3 Row .25"
49	3	045-	(315-0003821)	J8, J9, J15	Con. Tht. Hdr. 9 Pin, 1 Row .156"
50	2	200-5000-08	(407-0003117)	F6, F8	Fuse 3 Amp 250V Slo-Blo (Glass, Tht. 3AG)
51	2	200-5000-06	(407-0003118)	F7, F11	Fuse 4 Amp 250V Slo-Blo (Glass, Tht. 3AG)
52	7	200-5000-01	(407-0003119)	F1, F2, F3, F4, F10, F12, F13	Fuse 5 Amp 250V Slo-Blo (Glass, Tht. 3AG)
53	1	200-5000-03	(407-0003121)	F5	Fuse 7 Amp 250V Slo-Blo (Glass, Tht. 3AG)
54	1	200-5000-05	(407-0003122)	F9	Fuse 8 Amp 250V Slo-Blo (Glass, Tht. 3AG)
55	1	121-5039-00	(415-0004788)	POT1	Potiento THT 50Ω Single Top Adjust. Trimr.
56	1	165-6000-00	(425-0006913)	L18	LED SM Yellow 0805 LED
57	5	165-6001-00	(425-0007753)	L4, L6, L8, L16, L19	LED SM Green Ultrabright Top
58	13	165-6002-00	(425-0007755)	L1, L2, L3, L5, L7, L9, L10, L11, L12, L15, L17	LED SM Red Ultrabright Top 0805 LED
59	1	190-5002-00	(448-0004778)	RLY1	Relay Tht. GW DPDT10A DC24 2400VA PC MNT
60	1	127-5001-00	(461-0003520)	*for* BRDG 4, BRDG 5	Heatsink, Sq. Finned Ba TO-220 Avid 531102
61	1	127-5001-02	(461-0003534)	*for* U1	Heatsink All Large Finned Alum. TO-3
62	1	127-5001-04	(579103B00000G)	*for* U1 *on* TO-3 LM338 5A Adj. Volt. Reg.	Heatsink, Circular Finned (Mfg. Aavid)
63	4	240-5008-00	(503-0004469)	*2 pcs. for* U1 *1 pc. each for* BRDG 4 & 5	#6-32 Keps Nut
64	26	205-0004-00	(503-0004667)	*2 pcs. each for* F1 - F13	Fuseclip with End Stops (+ Ears)
65	4	237-5504-00	(504-0004610)	*2 pcs. for* U1 1 *pc. each for* BRDG 4 & 5	#6-32 X 3/4" PPH MS (Zinc) Screw
66	2	254-5007-02	(507-0004544)	*for* BRDG 4 & 5 (Mfg. .169" I.D. X 9/32" O.D. X 1/4")	1/4" Slf. Rtn. Spacer White
67	5	254-5007-05	(507-0004547)	*for* BRDG1, 2 & 3 and *for* Mounting Holes	5/16" Slf. Rtn. Spacer White

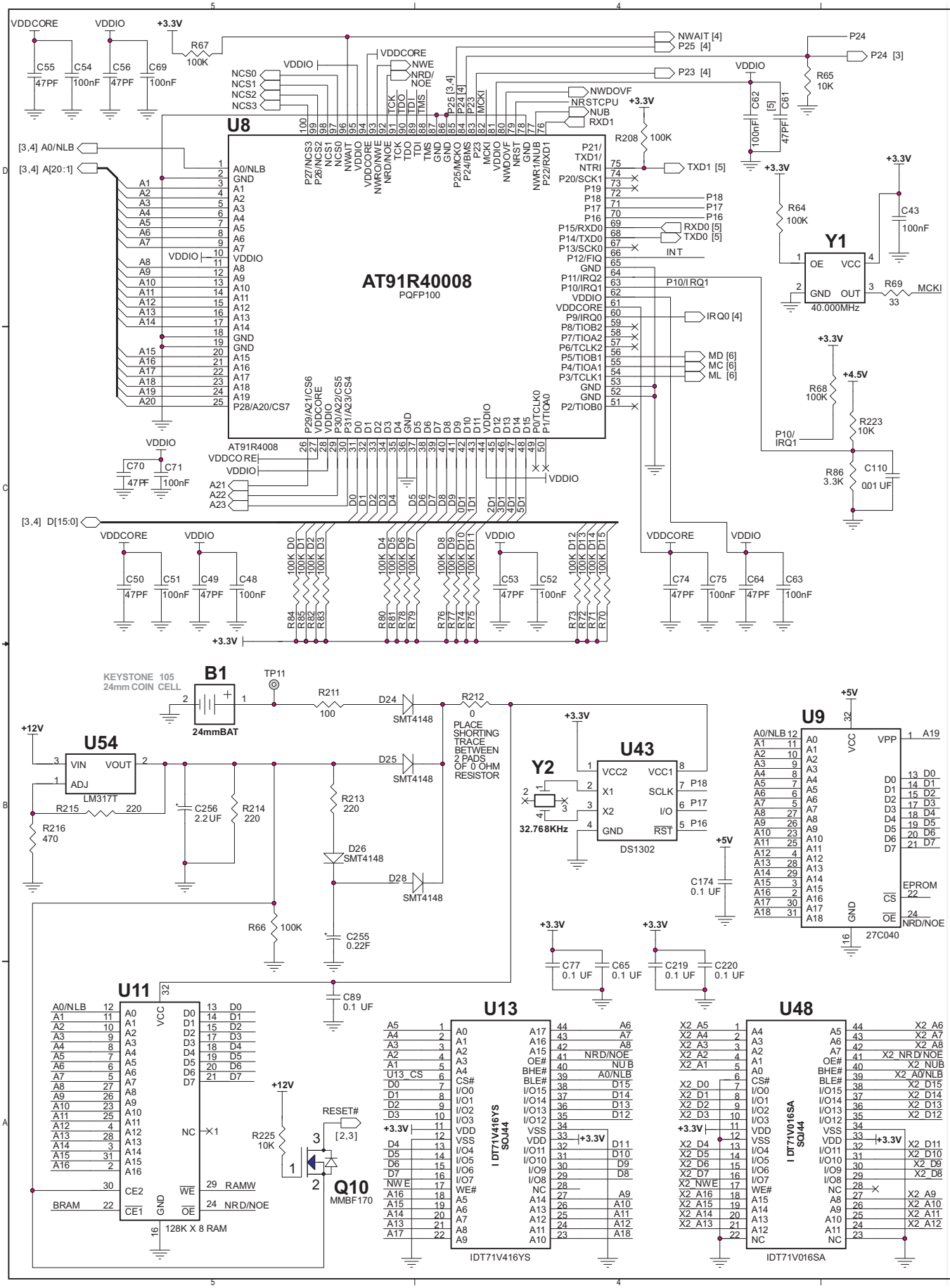
U8
AT91R40008
PQFP100
AT91R4008
Y1
40.000MHz
B1
KEYSTONE 105
24mm COIN CELL
24mmBAT
U54
LM317T
U43
DS1302
Y2
32.768KHz
U9
27C040
U11
128K X 8 RAM
U13
IDT71V416YS
U48
IDT71V016SA
Q10
MMBF170
PLACE SHORTING TRACE BETWEEN 2 PADS OF 0 OHM RESISTOR
VDDCORE
VDDIO
+3.3V
+5V
+12V
+4.5V

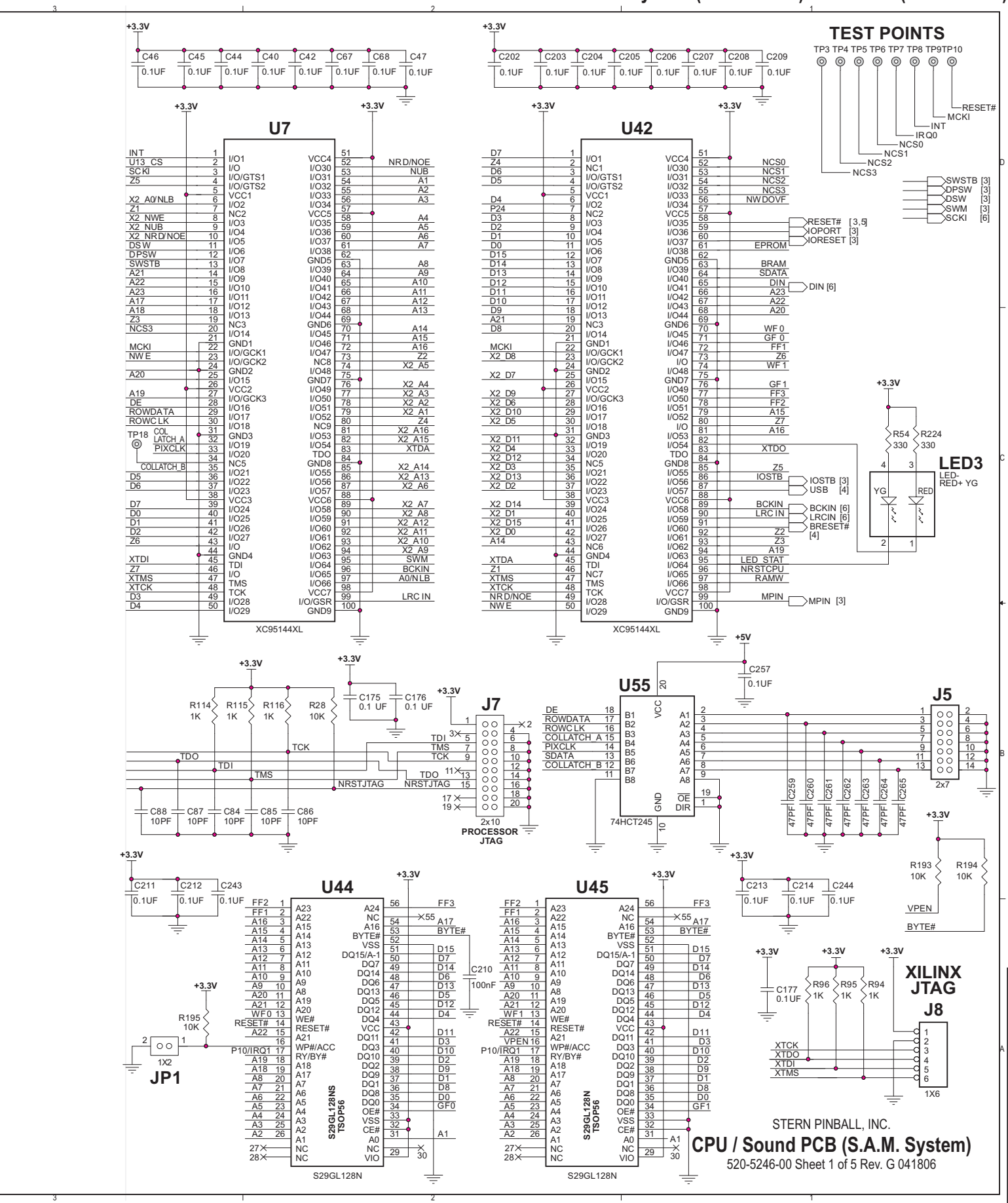
TEST POINTS
TP3 TP4 TP5 TP6 TP7 TP8 TP9 TP10
U7
XC95144XL
U42
XC95144XL
LED3
LED-
RED+ YG
U55
74HCT245
J7
2x10
PROCESSOR
JTAG
J5
2x7
U44
S29GL128N
U45
S29GL128N
JP1
1X2
XILINX
JTAG
J8
1X6
STERN PINBALL, INC.
CPU / Sound PCB (S.A.M. System)
520-5246-00 Sheet 1 of 5 Rev. G 041806

Sec. 5: PCBs

CPU / SOUND PCB S.A.M. System (520-5246-00) Schematic (Sheet 2 of 5)

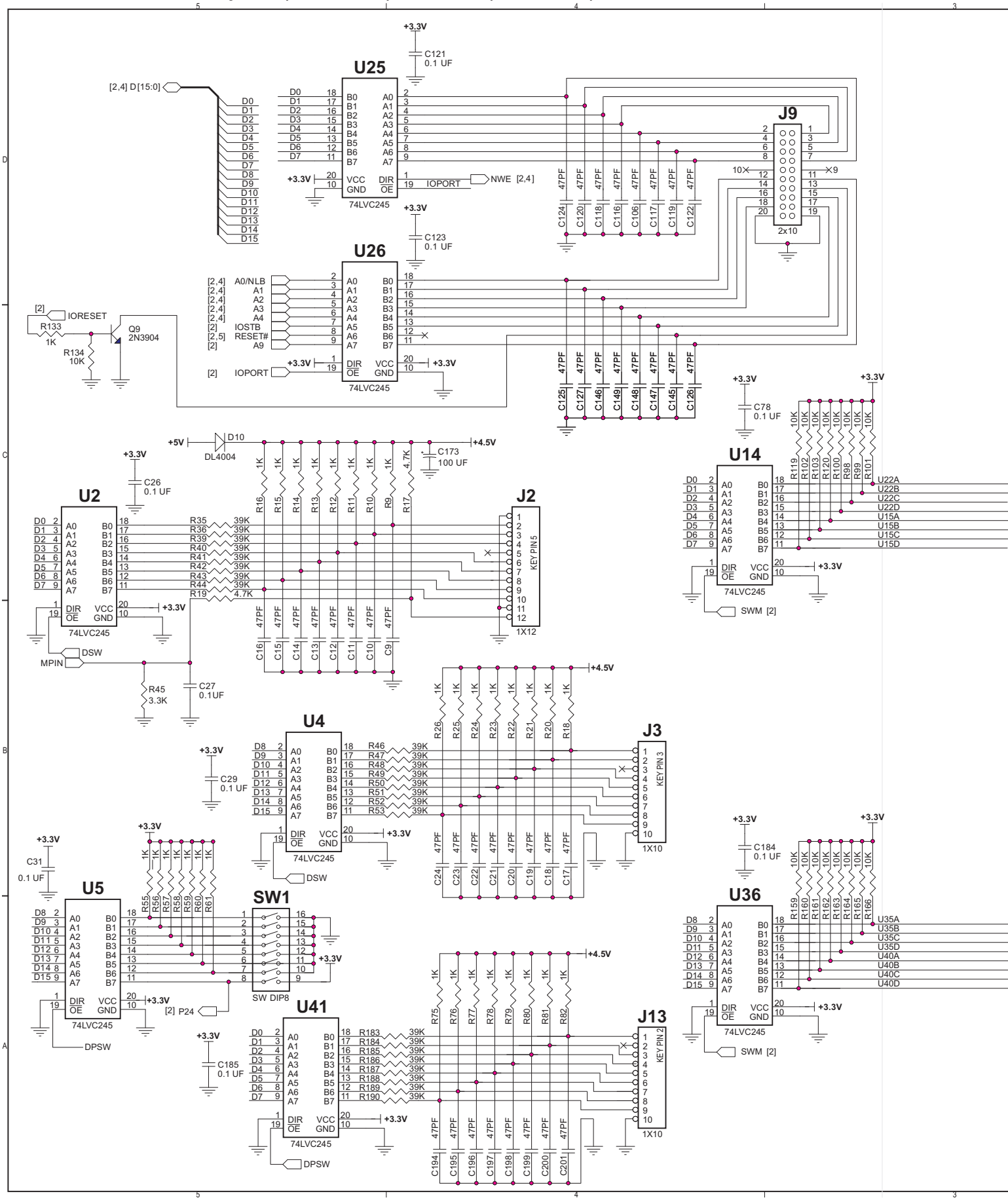

WPT™
WORLD POKER TOUR

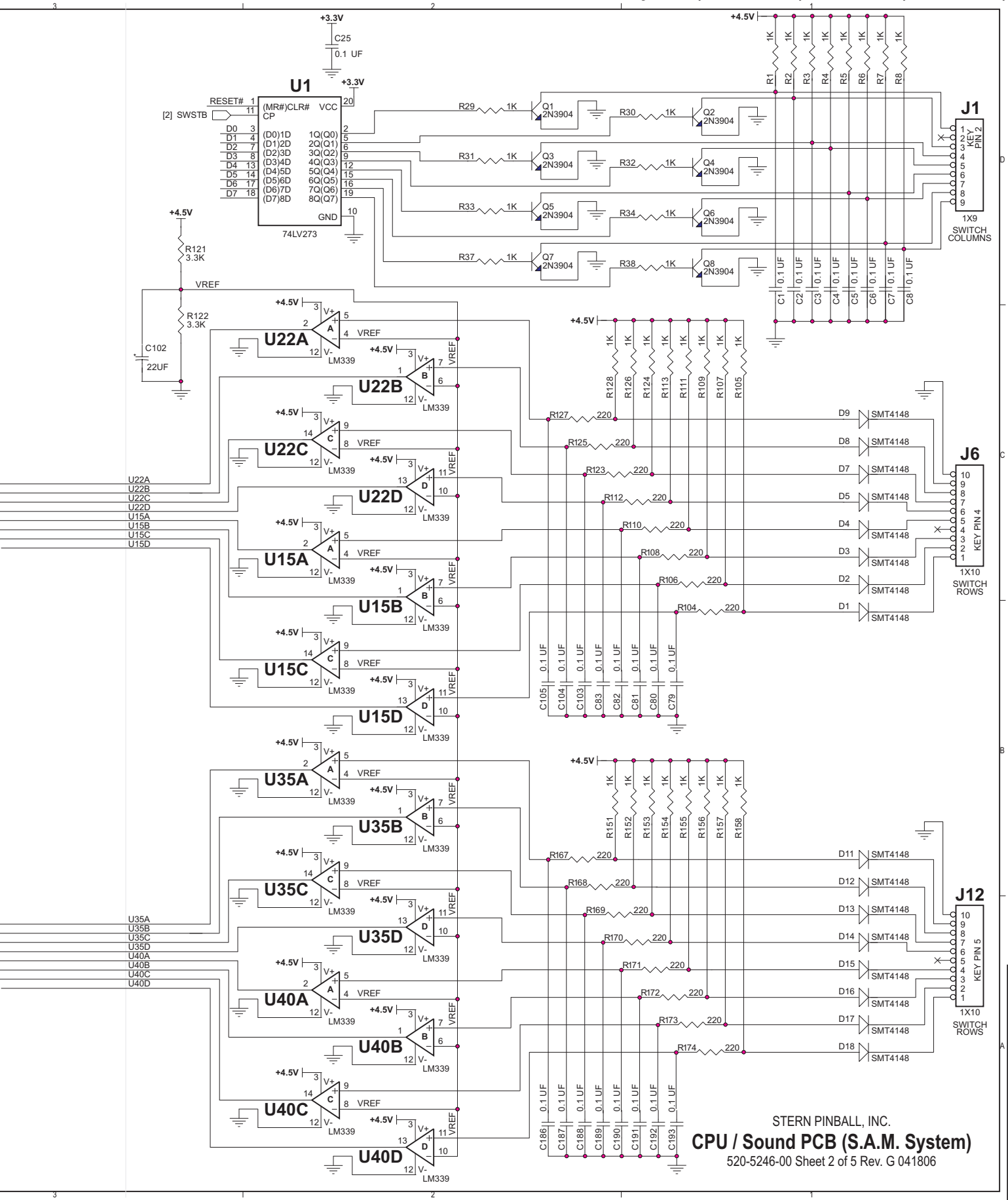
U1
74LV273
U22A
U22B
U22C
U22D
U15A
U15B
U15C
U15D
U35A
U35B
U35C
U35D
U40A
U40B
U40C
U40D
LM339
J1
1X9
SWITCH COLUMNS
J6
J12
1X10
SWITCH ROWS
KEY PIN 2
KEY PIN 4
KEY PIN 5
SMT4148
2N3904
+3.3V
+4.5V
VREF
STERN PINBALL, INC.
CPU / Sound PCB (S.A.M. System)
520-5246-00 Sheet 2 of 5 Rev. G 041806

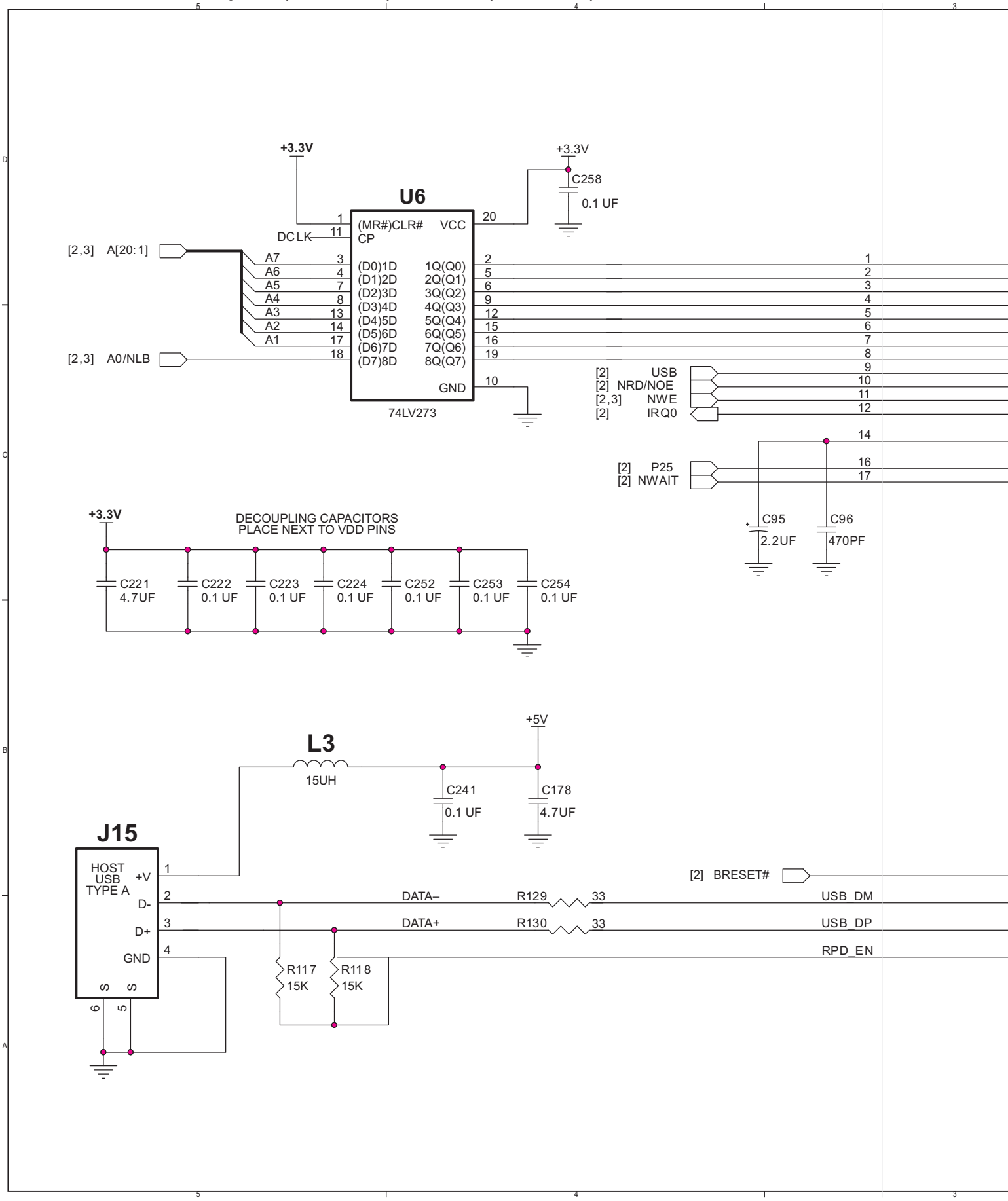
U6
74LV273
(MR#)CLR#
CP
VCC
GND
(D0)1D
(D1)2D
(D2)3D
(D3)4D
(D4)5D
(D5)6D
(D6)7D
(D7)8D
1Q(Q0)
2Q(Q1)
3Q(Q2)
4Q(Q3)
5Q(Q4)
6Q(Q5)
7Q(Q6)
8Q(Q7)
DCLK
A7
A6
A5
A4
A3
A2
A1
A0/NLB
[2,3] A[20:1]
+3.3V
C258
0.1 UF
[2] USB
[2] NRD/NOE
[2,3] NWE
[2] IRQ0
[2] P25
[2] NWAIT
C95
2.2UF
C96
470PF
DECOUPLING CAPACITORS
PLACE NEXT TO VDD PINS
C221
4.7UF
C222
0.1 UF
C223
0.1 UF
C224
0.1 UF
C252
0.1 UF
C253
0.1 UF
C254
0.1 UF
L3
15UH
+5V
C241
0.1 UF
C178
4.7UF
J15
HOST
USB
TYPE A
+V
D-
D+
GND
R117
15K
R118
15K
DATA–
DATA+
R129
R130
33
[2] BRESET#
USB_DM
USB_DP
RPD_EN

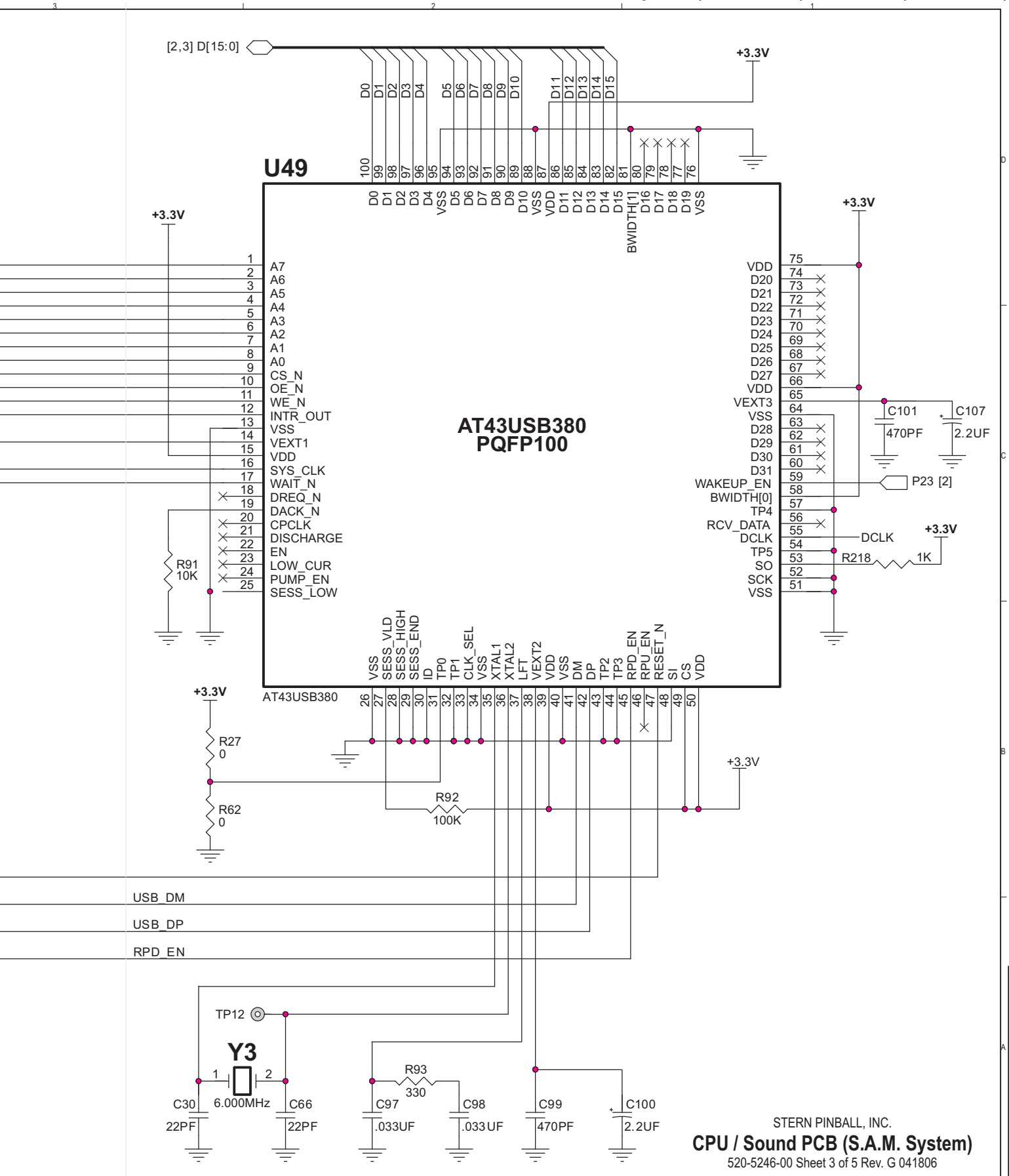
[2,3] D[15:0]
+3.3V
U49
AT43USB380
PQFP100
A7
A6
A5
A4
A3
A2
A1
A0
CS_N
OE_N
WE_N
INTR_OUT
VSS
VEXT1
VDD
SYS_CLK
WAIT_N
DREQ_N
DACK_N
CPCLK
DISCHARGE
EN
LOW_CUR
PUMP_EN
SESS_LOW
VDD
D20
D21
D22
D23
D24
D25
D26
D27
VDD
VEXT3
VSS
D28
D29
D30
D31
WAKEUP_EN
BWIDTH[0]
TP4
RCV_DATA
DCLK
TP5
SO
SCK
VSS
C101
470PF
C107
2.2UF
P23 [2]
DCLK
R218
1K
R91
10K
R27
0
R62
0
R92
100K
USB_DM
USB_DP
RPD_EN
TP12
Y3
6.000MHz
C30
22PF
C66
22PF
R93
330
C97
.033UF
C98
.033UF
C99
470PF
C100
2.2UF
STERN PINBALL, INC.
CPU / Sound PCB (S.A.M. System)
520-5246-00 Sheet 3 of 5 Rev. G 041806

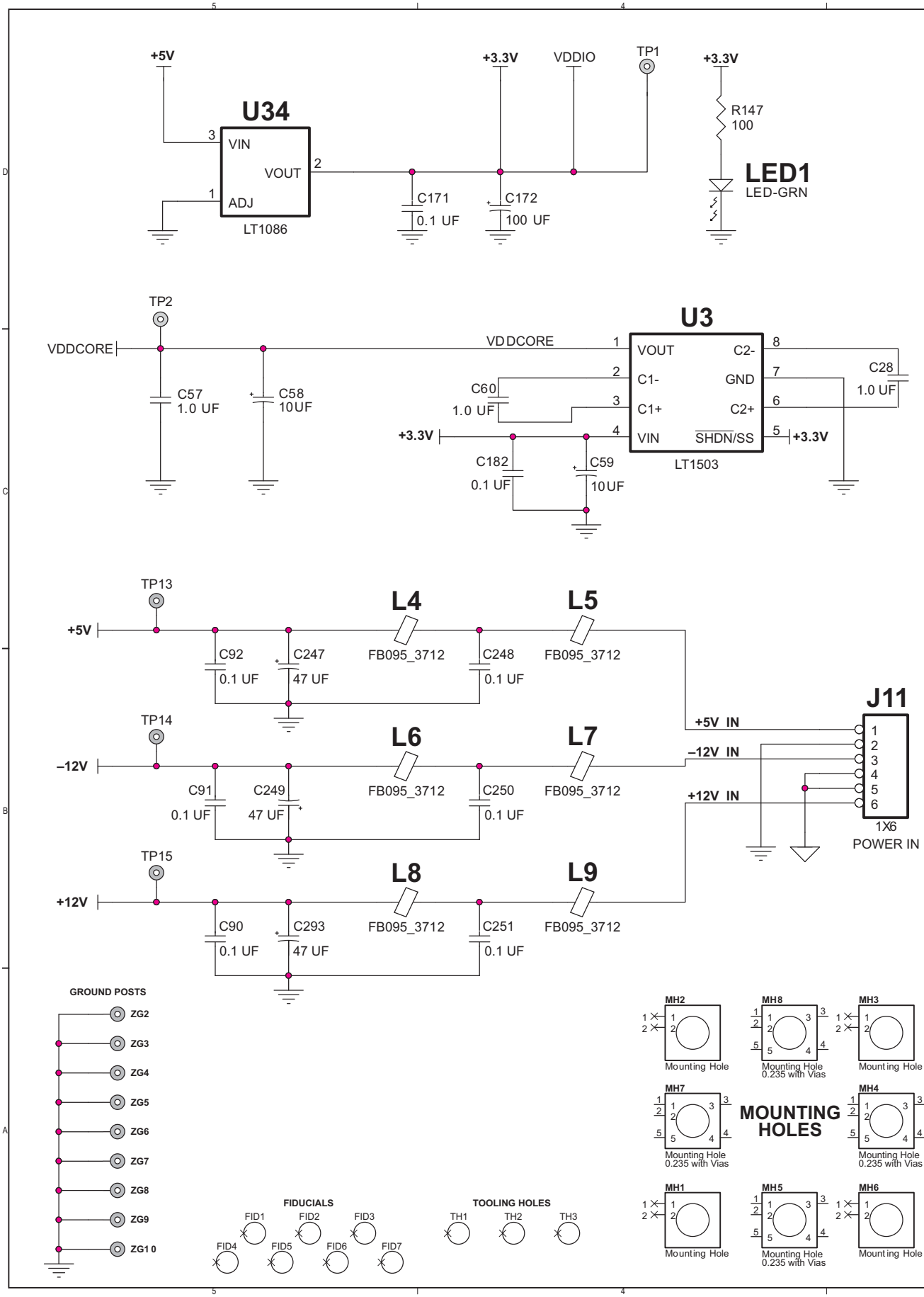
+5V
U34
VIN
VOUT
ADJ
LT1086
C171
0.1 UF
+3.3V
VDDIO
TP1
C172
100 UF
+3.3V
R147
100
LED1
LED-GRN
TP2
VDDCORE
C57
1.0 UF
C58
10UF
U3
VOUT
C1-
C1+
VIN
C2-
GND
C2+
SHDN/SS
LT1503
C60
1.0 UF
C28
1.0 UF
+3.3V
C182
0.1 UF
C59
10UF
TP13
+5V
L4
L5
C92
0.1 UF
C247
47 UF
FB095_3712
C248
0.1 UF
TP14
–12V
L6
L7
C91
0.1 UF
C249
47 UF
C250
0.1 UF
TP15
+12V
L8
L9
C90
0.1 UF
C293
47 UF
C251
0.1 UF
+5V IN
–12V IN
+12V IN
J11
1X6
POWER IN
GROUND POSTS
ZG2
ZG3
ZG4
ZG5
ZG6
ZG7
ZG8
ZG9
ZG10
FIDUCIALS
FID1
FID2
FID3
FID4
FID5
FID6
FID7
TOOLING HOLES
TH1
TH2
TH3
MOUNTING HOLES
MH1
MH2
MH3
MH4
MH5
MH6
MH7
MH8
Mounting Hole
Mounting Hole 0.235 with Vias

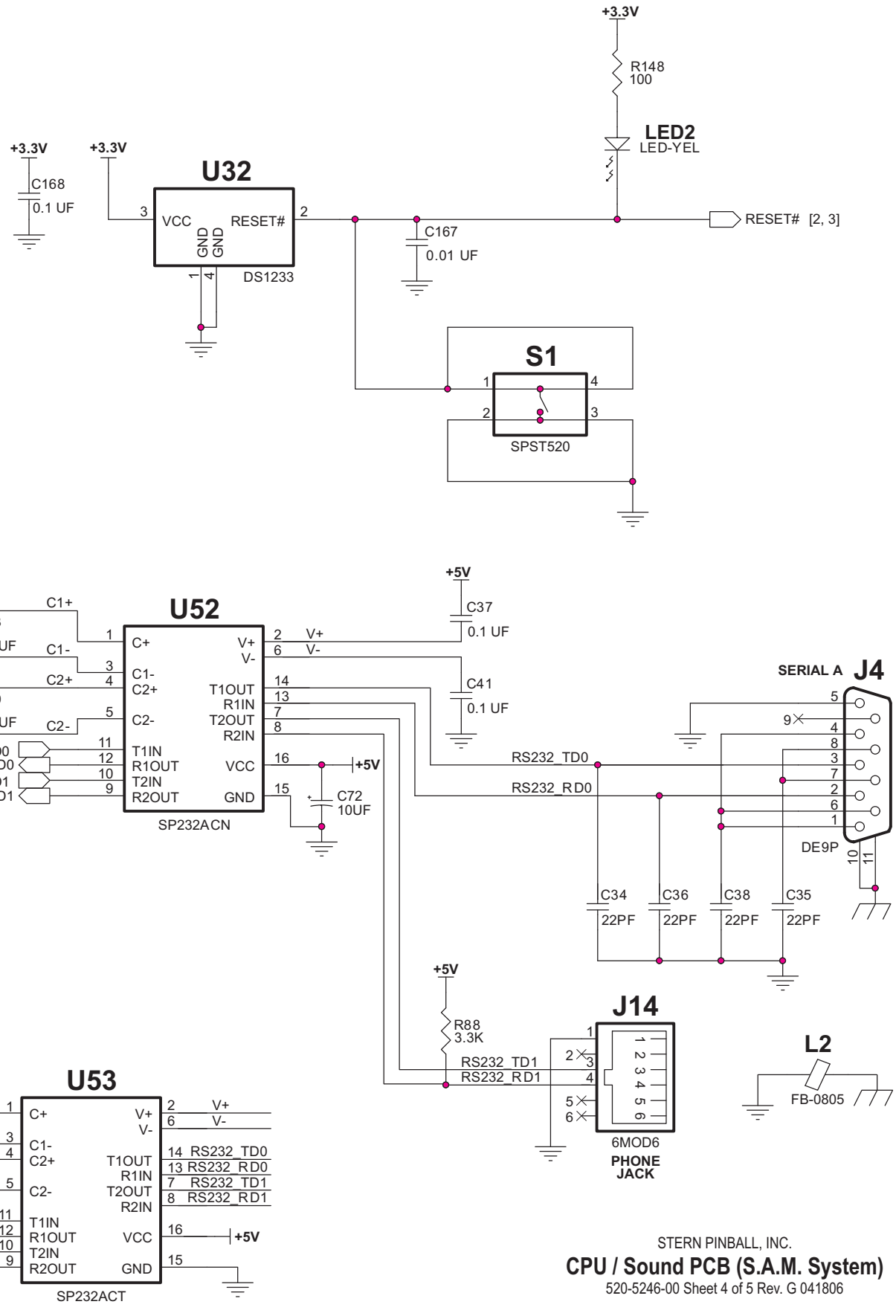

STERN PINBALL, INC.

CPU / Sound PCB (S.A.M. System)

520-5246-00 Sheet 4 of 5 Rev. G 041806

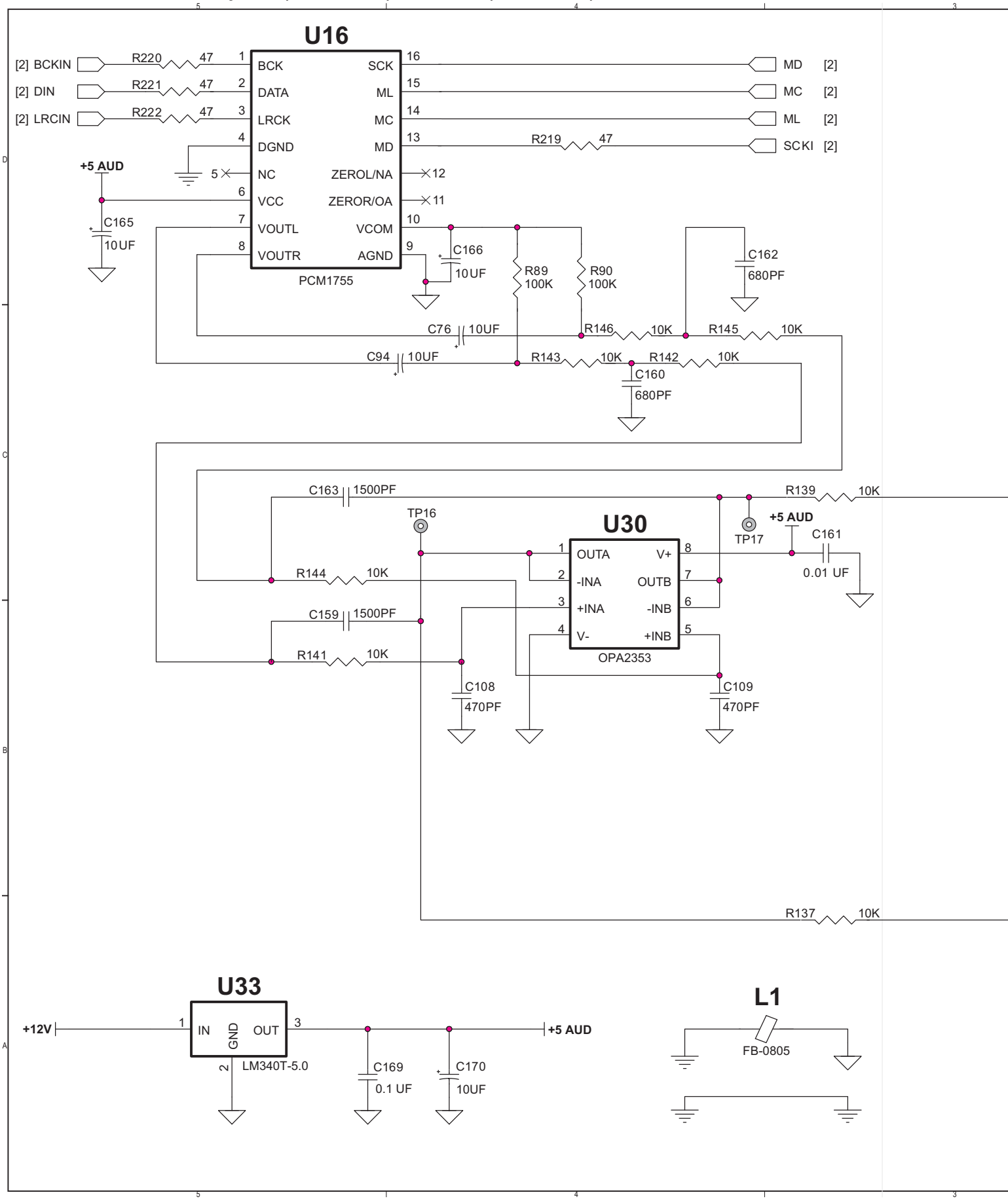
U16
PCM1755
BCK
DATA
LRCK
DGND
NC
VCC
VOUTL
VOUTR
SCK
ML
MC
MD
ZEROL/NA
ZEROR/OA
VCOM
AGND
[2] BCKIN
[2] DIN
[2] LRCIN
R220 47
R221 47
R222 47
R219 47
MD [2]
MC [2]
ML [2]
SCKI [2]
+5 AUD
C165 10UF
C166 10UF
R89 100K
R90 100K
C162 680PF
C76 10UF
C94 10UF
R146 10K
R145 10K
R143 10K
R142 10K
C160 680PF
C163 1500PF
TP16
TP17
R139 10K
U30
OPA2353
OUTA
-INA
+INA
V-
V+
OUTB
-INB
+INB
C161 0.01 UF
R144 10K
C159 1500PF
R141 10K
C108 470PF
C109 470PF
R137 10K
U33
LM340T-5.0
IN
GND
OUT
+12V
+5 AUD
C169 0.1 UF
C170 10UF
L1
FB-0805

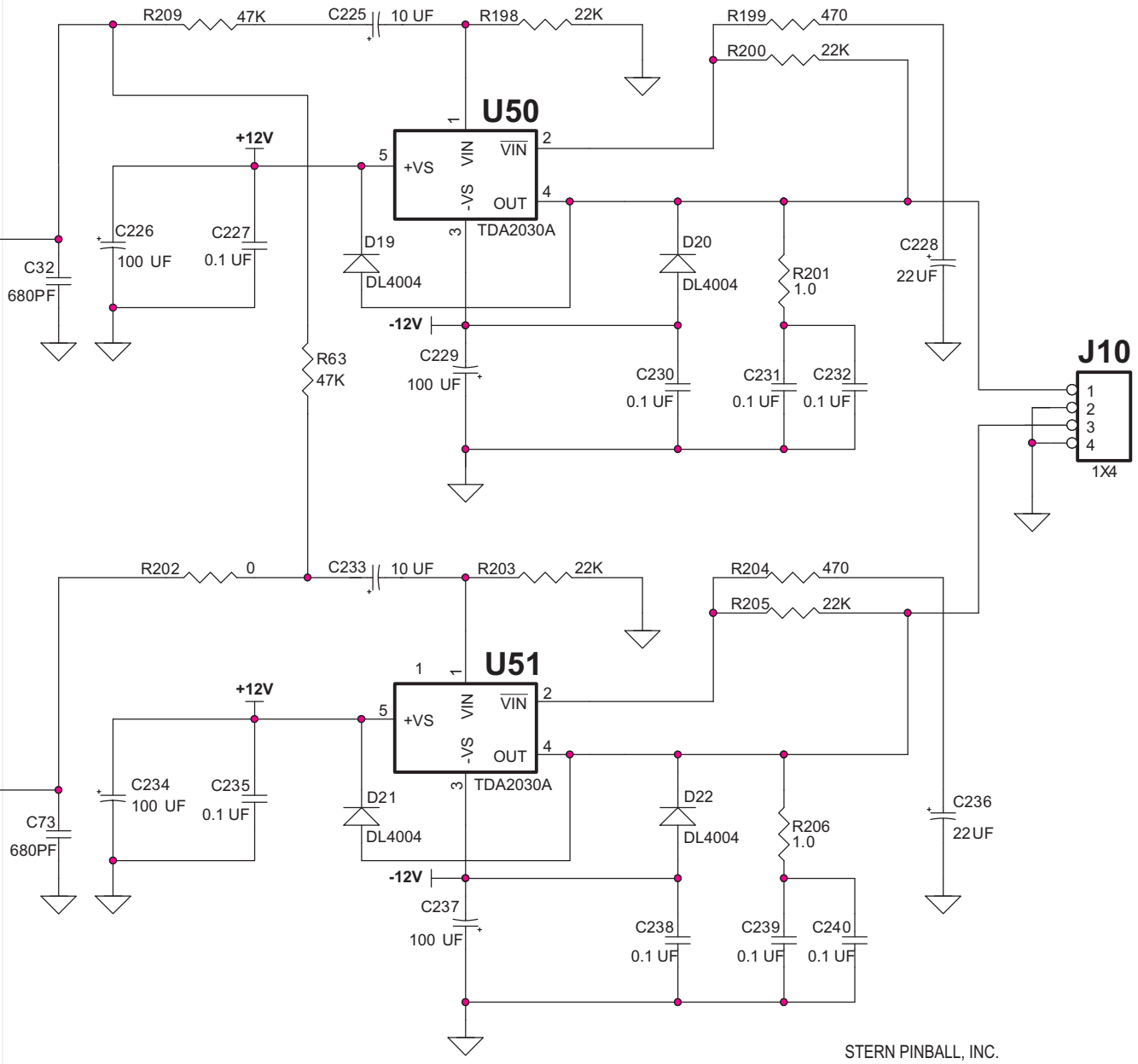

STERN PINBALL, INC.

CPU / Sound PCB (S.A.M. System)

520-5246-00 Sheet 3 of 5 Rev. G 041806

CPU / SOUND PCB S.A.M. System (520-5246-00) Component Layout

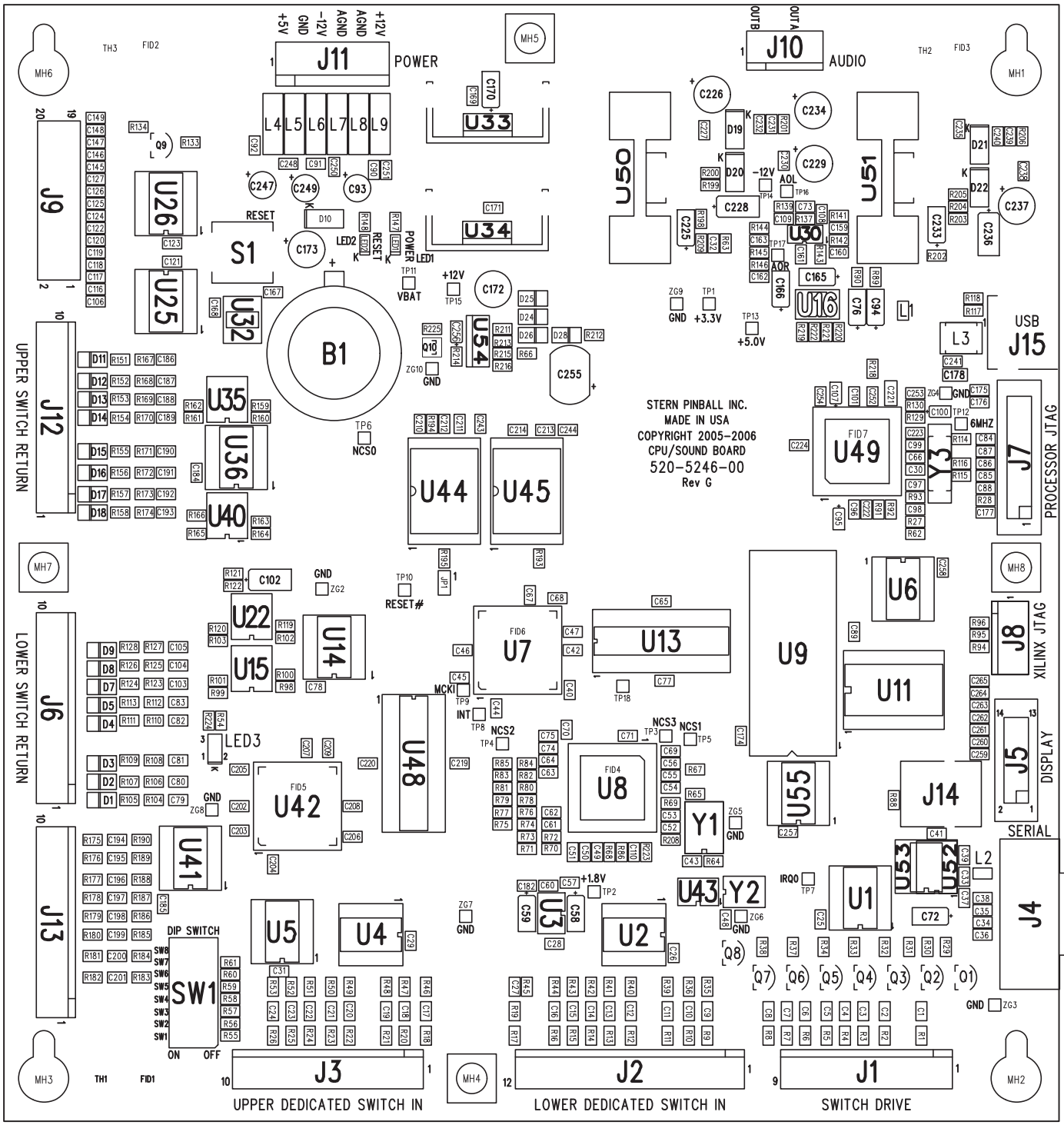

CPU / SOUND PCB S.A.M. System (520-5246-00) Component Parts

ITEM	QTY.	SPI PART NUMBER	(MFG. P.N.)	REF-DESIGNATOR	DESCRIPTION (SM = Surface Mount)
—	1	**520-5246-00**		**CPU/Sound PCB (S.A.M. System), Rev. G** *(includes Items **1-90**)*	
1	3	121-6017-00	(101-0001790)	R27, R202, R212	Resistor SM 0805 0.0Ω 1/10W 5%
2	2	121-6108-00	(101-0001792)	R201, R206	Resistor SM 0805 1.0Ω 1/10W 5%
3	24	121-6001-00	(101-0001807)	R9, R10, R11, R12, R13, R14, R15, R16, R18, R20, R21, R22, R23, R24, R25, R26, R175, R176, R177, R178, R179, R180, R181, R182	Resistor SM 0805 1.5KΩ 1/10W 5%
4	3	121-6002-00	(101-0001820)	R147, R148, R211	Resistor SM 0805 Film 100Ω 1/10W 5%
5	24	121-6019-00	(101-0001823)	R64, R66, R67, R68, R70, R71, R72, R73, R74, R75, R76, R77, R78, R79, R80, R81, R82, R83, R84, R85, R89, R90, R92, R208	Resistor SM 0805 100KΩ 1/10W 5%
6	33	121-6020-00	(101-0001827)	R28, R65, R91, R98, R99, R100, R101, R102, R103, R119, R120, R134, R137, R139, R141, R142, R143, R144, R145, R146, R159, R160, R161, R162, R163, R164, R165, R166, R193, R194, R195, R223, R225	Resistor SM 0805 Film 10KΩ 1/10W 5%
7	2	121-6021-00	(101-0001880)	R117, R118	Resistor SM 0805 15KΩ 1/10W 5%

Parts List Continued Next Page.

CPU / SOUND PCB S.A.M. System (520-5246-00) Parts *Continued*

ITEM	QTY.	SPI PART NUMBER	(MFG. P.N.)	REF-DESIGNATOR	DESCRIPTION (SM = Surface Mount)
8	47	121-6022-00	(101-0001905)	R1, R2, R3, R4, R5, R6, R7, R8, R29, R30, R31, R32, R33, R34, R37, R38, R55, R56, R57, R58, R59, R60, R61, R94, R95, R96, R105, R107, R109, R111, R113, R114, R115, R116, R124, R126, R128, R133, R151, R152, R153, R154, R155, R156, R157, R158, R218, LED2	Resistor SM 0805 1KΩ 1/10W 5%
9	19	121-6004-00	(101-0001943)	R104, R106, R108, R110, R112, R123, R125, R127, R167, R168, R169, R170, R171, R172, R173, R174, R213, R214, R215	Resistor SM 0805 Film 220Ω 1/10W 5%
10	4	121-6005-00	(101-0001849)	R198, R200, R203, R205	Resistor SM 0805 Film 22KΩ 1/10W 5%
11	5	121-6023-00	(101-0001889)	R45, R86, R88, R121, R122	Resistor SM 0805 3.3KΩ 1/10W 5%
12	3	121-6024-00	(101-0002009)	R69, R129, R130	Resistor SM 0805 33Ω 1/10W 5%
13	2	121-6006-00	(101-0002012)	R54, R93	Resistor SM 0805 Film 330Ω 1/10W 5%
14	24	121-6013-00	(101-0002035)	R35, R36, R39, R40, R41, R42, R43, R44, R46, R47, R48, R49, R50, R51, R52, R53, R183, R184, R185, R186, R187, R188, R189, R190	Resistor SM 0805 Film 39KΩ 1/10W 5%
15	2	121-6008-00	(101-0002046)	R17, R19	Resistor SM 0805 Film 4.7KΩ 1/10W 5%
16	4	121-6014-00	(101-0002065)	R219, R220, R221, R222	Resistor SM 0805 Film 47Ω 1/10W 5%
17	3	121-6025-00	(101-0002067)	R199, R204, R216	Resistor SM 0805 470Ω 1/10W 5%
18	1	121-6015-00	(101-0002071)	R209	Resistor SM 0805 Film 47KΩ 1/10W 5%
19	99	125-6001-00	(121-0000056)	C25, C26, C27, C29, C31, C33, C37, C39, C40, C41, C42, C43, C44, C45, C46, C47, C48, C51, C52, C54, C62, C64, C65, C67, C68, C69, C71, C75, C77, C78, C79, C80, C81, C82, C83, C89, C90, C91, C92, C103, C104, C105, C121, C123, C168, C169, C171, C174, C175, C176, C177, C182, C184, C185, C186, C187, C188, C189, C190, C191, C192, C193, C202, C203, C204, C205, C206, C207, C208, C209, C210, C211, C212, C213, C214, C219, C220, C222, C223, C224, C227, C230, C231, C232, C235, C238, C239, C240, C241, C243, C244, C248, C250, C251, C252, C253, C254, C257, C258	Capacitor SM 0805 Cer. .1UF 50V 10% X7R
20	3	125-6013-00	(121-0000077)	C28, C57, C60	Capacitor SM 0805 Cer. 1UF 10V 10% X7R
21	1	125-6014-00	(121-0000086)	C97	Capacitor SM 0805 Cer. 3300PF 50V 5% X7R
22	7	125-6002-00	(121-0000096)	C259, C260, C261, C262, C263, C264, C265	Capacitor SM 0805 Cer. 470PF 50V 5% NPO
				Rev. G as Mods on back of PCB, Rev. H in place (FCC Caps Plasma Ribbon Cable)	
23	3	125-6015-00	(121-0000269)	C102, C228, C236	Capacitor SM Case D Tant 22UF 25V 20%
24	11	125-6003-00	(121-0004236)	C1, C2, C3, C4, C5, C6, C7, C8, C110, C161, C167	Capacitor SM 0805 Cer. .01UF 50V 10% X7R
25	49	125-6016-00	(121-0004245)	C9, C10, C11, C12, C13, C14, C15, C16, C17, C18, C19, C20, C21, C22, C23, C24, C49, C50, C53, C55, C56, C61, C63, C70, C74, C106, C116, C117, C118, C119, C120, C122, C124, C125, C126, C127, C145, C146, C147, C148, C149, C194, C195, C196, C197, C198, C199, C200, C201	Capacitor SM 0805 Cer. 47PF 50V 5% NPO
26	4	125-6017-00	(121-0005317)	C95, C100, C107, C256	Capacitor SM Case A Tant 2.2UF 16V 10%
27	6	125-6004-00	(121-0005318)	C30, C34, C35, C36, C38, C66	Capacitor SM 0805 Cer. 22PF 100V 5% NPO
28	2	125-6005-00	(121-0006113)	C178, C221	Capacitor SM 1206 Cer. 4.7PF 16V 20% Y5V
29	2	125-6006-00	(121-0007394)	C159, C163	Capacitor SM 603 Cer. 1500PF 25V 10% X7R
30	10	125-6007-00	(121-0007853)	C58, C59, C72, C76, C94, C165, C166, C170, C225, C233	Capacitor SM Case C Tant 10UF 16V 20%
31	1	125-6018-00	(121-0010097)	C98	Cap. SM 805 Cer. .033UF 50V +80/-20% Y5V
32	4	125-6009-00	(121-0010493)	C32, C73, C160, C162	Capacitor SM 805 Cer. 680PF 50V 5% NPO
33	6	125-6019-00	(134-0005415)	C172, C173, C226, C229, C234, C237	Capacitor Tht. Radial Alum. 100UF 35V 20%
34	3	125-6020-00	(134-0007336)	C93, C247, C249	Capacitor Tht. Radial Alum. 47UF 35V 20%
35	1	125-6010-00	(139-0006487)	C255	Capacitor Tht. .22UF 5.5V, Gold, SD, Vert
36	6	125-6011-00	(161-0004959)	L4, L5, L6, L7, L8, L9	Ind.-SM Ferrite100Ω 1234 Smt.
37	2	125-6012-00	(161-0007286)	L1, L2	Ind.-SM 805 Bead 600Ω 100Mhz 25% 500mA
38	1	125-6021-00	(161-0009686)	L3	Ind.-SM EP Inductor15uH 1100mA 20%
39	20	112-6000-00	(181-0004347)	D1, D2, D3, D4, D5, D7, D8, D9, D11, D12, D13, D14, D15, D16, D17, D18, D24, D25, D26, D28	Diode SM MiniMELFDL/LL4148 100V 500mW
40	5	112-6001-00	(181-0004478)	D10, D19, D20, D21, D22	Diode SM MELF DL4004 400V 1.0A
41	1	110-6000-00	(201-0006808)	Q10	Fet-SM SOT-23 MMBF170 N-Chnnl. Fet
42	9	110-0069-00	(213-0003546)	Q1, Q2, Q3, Q4, Q5, Q6, Q7, Q8, Q9	Transistor Tht. TO-92 2N3904 NPN 40V 0.2A
43	1	124-6000-00	(213-0005687)	U34	Trans. Tht. TO-220 LT1086 3.3V 1.5A Volt Reg.
44	8	100-6004-00	(221-0001000)	U2, U4, U5, U14, U25, U26, U36, U41	I.C.-SM SO 74LVC245 Oct. Bus Xcvr.
45	1	100-5048-00	(221-0003716)	U55	I.C.-SM SOIC 74HCT245DW Octal Line Xvr. W/3S
46	4	100-6005-00	(221-0003718)	U15, U22, U35, U40	I.C.-SM SO LM339 Quad Diff. Comparator
47	1	100-6006-00	(221-0005249)	U43	I.C.-SM SOIC DS1302 Time Keeper
48	1	100-6008-00	(221-0006578)	U52	I.C.-SM SOIC SP232A SO-16
49	1	100-6009-00	(221-0006914)	U32	I.C.-SM SOT-223 DS1233A2-15 Reset
50	1	100-6007-00	(221-0006919)	U30	I.C.-SM OPA2353 Dual CMOS O/A MSOP-8
51	1	100-6018-00	(221-0006940)	U48	I.C.-SM SOJ IDT71V016SA15Y SOJ-44
52A	1	100-6016-00	(221-0007056)	U7 *(must be programmed)* XC95144XL program for U7 (I.C.-SM TQFP CPLD 144 Macro Cell 3.3V)	
52B	1	100-6017-00	(221-0007056)	U42 *(must be programmed)* XC95144XL program for U42 (I.C.-SM TQFP CPLD 144 Mac. Cell 3.3V)	
53	1	124-6001-00	(221-0007298)	U3	I.C.-SM SOIC LT1503CS8-1.8
54	1	100-6012-00	(221-0010735)	U11	I.C.-SM SOIC CY62128 SRAM 128Kx8 3V LP SO32
55	1	100-6013-00	(221-0010736)	U49	I.C.-SM QFP-L AT43 USB380 Processor USB 2.0
56	1	100-6014-00	(221-0010738)	U16	I.C.-SM SSOP PCM1755 24-Bit Audio DAC 16-PI
57	1	100-6010-00	(221-0010978)	U13	I.C.-SM SOJ IDT71V416S15Y SOJ-44
58	1	100-6011-00	(221-0010981)	U44	I.C.-SM TSOP S29GL256N11 256MB Flash
59	1	100-6015-00	(221-0011102)	U1	I.C.-SM SOIC 74LV273 SOIC-20
60	1	124-6002-00	(225-0003581)	U54	I.C.-Tht. TO-220 LM317T Adjustable Volt Reg.
61	2	100-5016-20	(225-0003635)	U50, U51	I.C.-Tht. Pentawat TDA2030 18W Amplifier
62	1	124-6003-00	(225-0006921)	U33	I.C.-Tht. TO-220 LM340T 5V 1A Volt Regulator
63	1	077-5217-00	(301-0004285)	SU9	Socket DIP/SIP 32-Pin, Tin, .6, Dip
64	2	n/a	(303-0005944)	TP1, TP2	Test Pt. All Test Point, White, Miniature
65	1	045-	(315-0003511)	JP1	Con.-Tht. Header 2 Pin, 1 Row, VT, Tin, .1"
66	1	045-	(315-0004097)	J11	Con.-Tht. Header 6 Pin, 1 Row, VT, Tin, .156"
67	1	045-	(315-0004121)	J1	Con.-Tht. Header 9 Pin, 1 Row, VT, Tin, .156"
68	4	045-	(315-0004122)	J3, J6, J12, J13	Con.-Tht. Hdr. 10 Pin, 1 Row, VT, Tin, .156"
69	1	045-	(315-0004124)	J8	Con.-Tht. Header 6 Pin, 1 Row, VT, Tin, .1"
70	1	045-	(315-0006776)	J14	Con.-Tht. Hdr. 6 Pos. Phone Jack, Vertical
71	1	045-	(315-0006910)	J9	Con.-Tht. Header 20 Pin, 2 Row, VT, Tin, .1"
72	1	045-	(315-0009252)	J10	Con.-Tht. Header 4 Pin, 1 Row, VT, Tin, .156"
73	1	045-	(315-0009520)	J2	Con.-Tht. Hdr. 12 Pin, 1 Row, VT, Tin, .156"
74	1	045-	(315-0009626)	J15	Con.-Tht. 4 Pos. USB Recpt, VT, WHT/BLK
75	1	045-	(315-0009627)	J4	Con.-Tht. D-Sub 9 Pos, VT, w/lock & Hex Sc.
76	1	045-	(315-0010979)	J5	Con.-Tht. Hdr. 14 Pin, 2 Row, VT, Gold, .1" Shrou.
77	1	140-6000-00	(401-0007295)	Y2	XTAL.-SM 32.768MHz Cl 12.5 FSR327
78	1	140-6001-00	(401-0010737)	Y3	XTAL.-SM 600MHz 20PF
79	1	140-6002-00	(403-0005489)	Y1	Osc.-SM SO 400MHz 5V Tristate CMOS
80	1	515-	(421-0010979)	B1	Battery (Coin Cell 24.5mm) Holder with clip
81	1	000-0644-01	(421-0010980)	*for* B1	Coin Cell 3V 265maH 24X3 mm (CR2430)
82	1	165-6003-00	(425-0005320)	LED1	LED SM Green 0805 LED
83	1	165-6004-00	(425-0010803)	LED3	LED SM Dual Red/Green 1210 Top
84	1	182-5002-00	(450-0004750)	SW1	8-Position Dip Switch Spst. 16 Pin X8 Slide 5VDC 100ma
85	1	182-5001-00	(450-0004752)	S1	White Push-Button Reset Switch Spst. 4 Pin Momentary 24VDC 50ma
86	2	127-5001-00	(461-0003520)	*for* U33, U34	Heatsink All Vert Mount Ba TO-220
87	2	127-5001-01	(461-0003528)	*for* U50, U51	Heatsink All Vert Mount Ba TO-220
88	4	237-5909-01	(504-0004604)	*for Heat Sinks* U33, U34, U50, U51	#4-40 X 3/8" PPH MS Sems (Zinc) Screw
89	4	240-5318-00	(503-0004457)	*for Heat Sinks* U33, U34, U50, U51	#4-40 Keps Nut
90	4	254-5007-05	(507-0004547)	*for* Mntg. Holes (Mfg. .169" I.D. X 9/32" O.D. X 5/16")	5/16" Slf. Rtn. Spacer White

Display Power Supply PCB (520-5138-00) Schematic

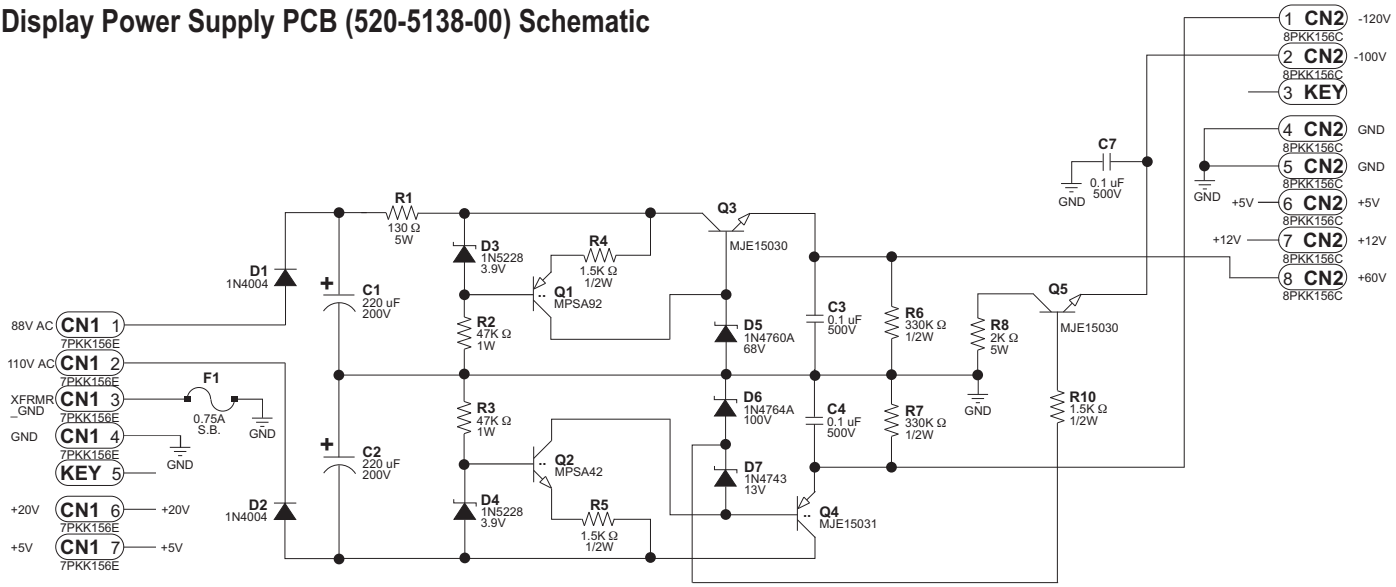

Display Power Supply PCB (520-5138-00) Component Layout & Parts

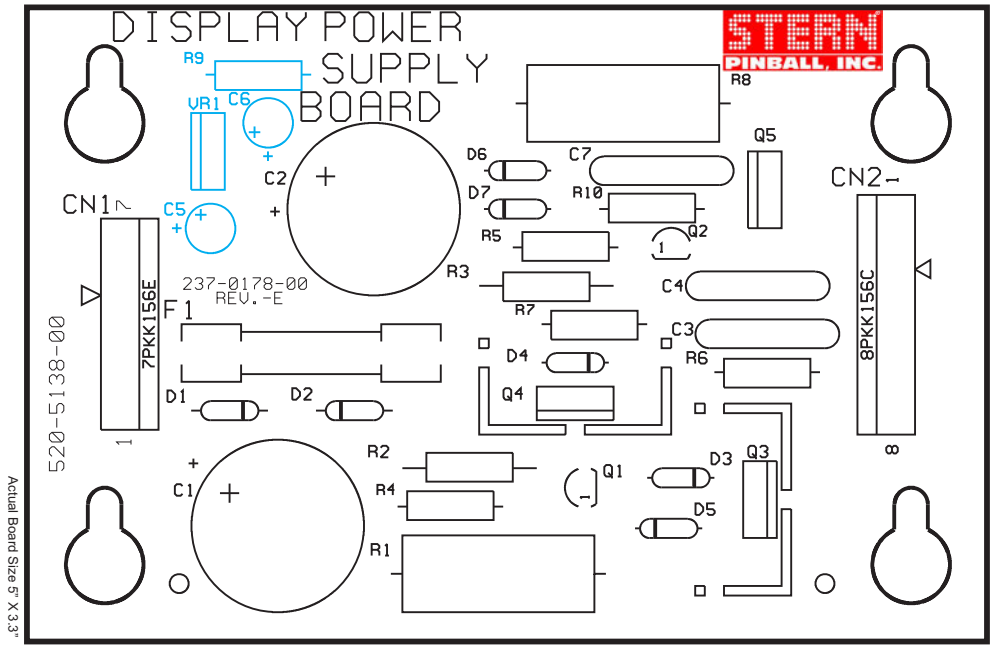

ITEM	QTY	PART NUMBER	REF-DESIGNATOR	DESCRIPTION (NS = Not Stuffed)
—	1	**520-5138-00**	**Display Power Supply PCB**	*(includes Items **1-2** + **4-24**)*
1	2	125-5044-00	C1, C2	220uF, 200v, Radial Lytic Cap.
2	3	125-5035-00	C3, C4, C7	0.1uF, 500v, Ceramic Disk Cap.
3	0	125-5003-00	(C5, C6: NS)	22uF, 35v, Rad Lytic Cap
4	1	045-5015-07	CN1	7PKK156E (PIN5=KEY)
5	1	045-5015-08	CN2	8PKK156 (PIN3=KEY)
6	2	112-5003-00	D1, D2	1N4004, Diode
7	2	112-0053-00	D3, D4	1N5228, 3.9v, Diode
8	1	112-0062-00	D5	1N4760A, 68v, Diode
9	1	112-0049-00A	D6	1N4764A, 100v, Diode
10	1	112-0061-00	D7	1N4743, 13v, Diode
11	1	200-5000-17	F1	3/4A (0.75A) S.B. Fuse
12	2	205-0004-00	F1	Fuse Clip
13	1	110-0100-00	Q1	MPSA92, Transistor
14	1	110-0082-00	Q2	MPSA42, Transistor
15	2	110-0101-00	Q3, Q5	MJE15030, Transistor
16	2	535-5000-11	Q3, Q4	Heatsinks - AAVID #563002
17	2	240-5008-00	Q3, Q4	#6-32 KEPS Nut
18	2	237-5501-00	Q3, Q4	#6-32 X 3/8" PPH Screw
19	1	110-0103-00	Q4	MJE15031, Transistor
20	1	121-5061-00	R1	130 Ω Resistor SMT, 5W
21	2	121-5060-00	R2, R3	47K Ω Resistor SMT, 1W
22	3	121-5038-00	R4, R5, R10	1.5K Ω Resistor SMT, 1/2W (R9: NS)
23	2	121-5059-00	R6, R7	330K Ω Resistor SMT, 1/2W
24	1	121-5062-00	R8	2K Ω Resistor SMT, 5W
25	0	124-5003-00	(VR1: NS)	7812CT

OPTO Interrupter (520-5252-04) Schematic
(for OPTO Switches 4-7, 10-13 & 33-40))

U-Shaped X4 OPTO
Located on the 4-Bank Middle Assembly,
4-Bank Right Assembly & 8-Bank Left Assembly
(8-Banks require 2X PCBs)

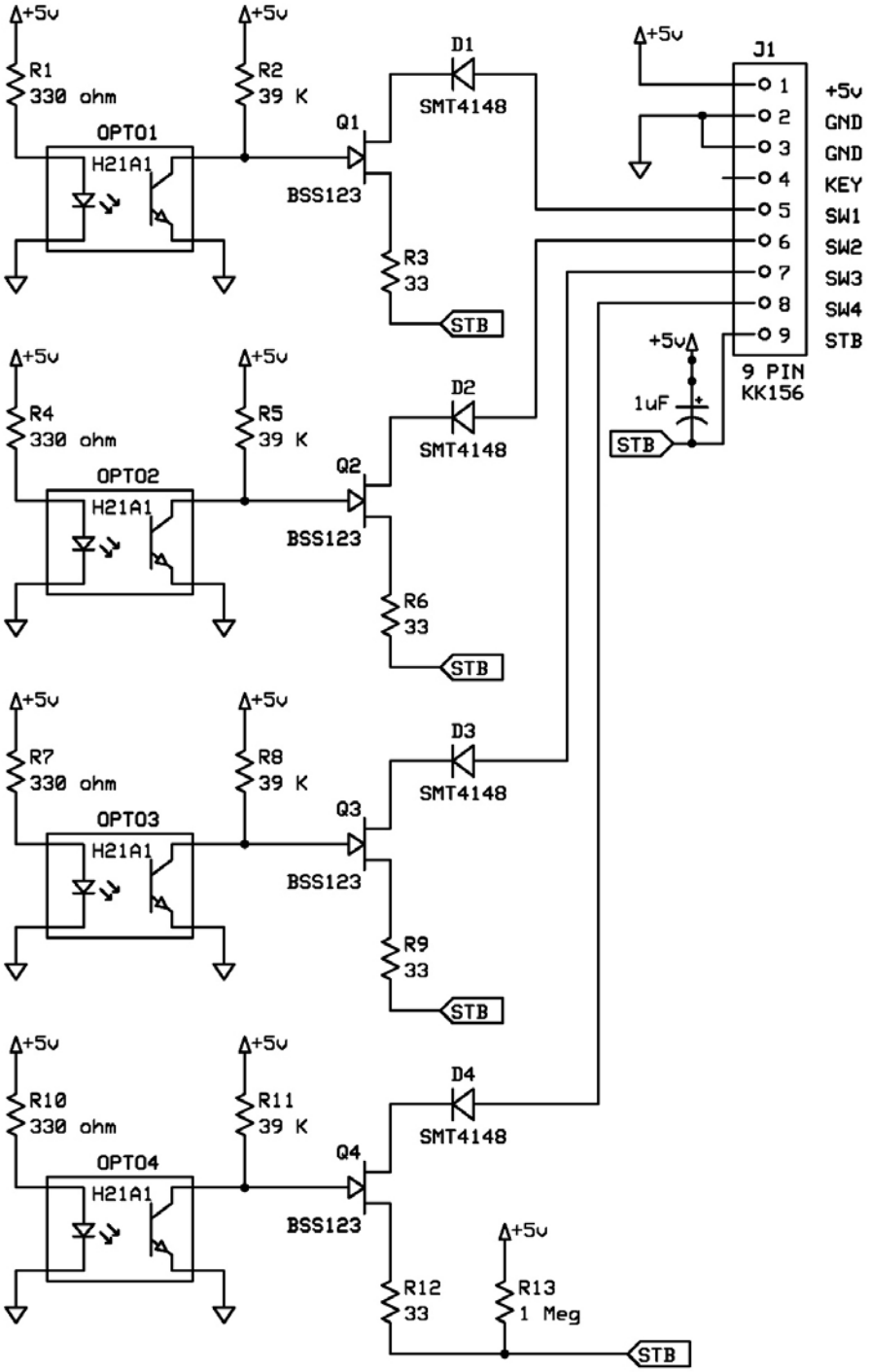

PLAYFIELD HARNESSES

8-BANK DROP TARGET (LEFT)

1	RED +5 Vdc	I/O J16-P4/8
2	BLK GND	I/O J16-9/13
3		
4	KEY	
5	WHT-GRN SW 37	CPU/SND J6-P5
6	WHT-BLU SW 38	CPU/SND J6-P3
7	WHT-VIO SW 39	CPU/SND J6-P2
8	WHT-GRY SW 40	CPU/SND J6-P1
9	GRN-ORG (DRV)	CPU/SND J1-P4

1	RED +5 Vdc	I/O J16-P4/8
2	BLK GND	I/O J16-9/13
3		
4	KEY	
5	WHT-BRN SW 33	CPU/SND J6-P9
6	WHT-RED SW 34	CPU/SND J6-P8
7	WHT-ORG SW 35	CPU/SND J6-P7
8	WHT-YEL SW 36	CPU/SND J6-P6
9	GRN-ORG (DRV)	CPU/SND J1-P4

4-BANK DROP TARGET (MIDDLE)

1	RED +5 Vdc	I/O J16-P4/8
2	BLK GND	I/O J16-9/13
3		
4	KEY	
5	TAN-RED SW 10	CPU/SND J12-P8
6	TAN-ORG SW 11	CPU/SND J12-P7
7	TAN-YEL SW 12	CPU/SND J12-P6
8	TAN-GRN SW 13	CPU/SND J12-P4
9	GRN-BRN (DRV)	CPU/SND J1-P1

4-BANK DROP TARGET (RIGHT)

1	RED +5 Vdc	I/O J16-P4/8
2	BLK GND	I/O J16-9/13
3		
4	KEY	
5	WHT-VIO SW 7	CPU/SND J6-P2
6	WHT-BLU SW 6	CPU/SND J6-P3
7	WHT-GRN SW 5	CPU/SND J6-P5
8	WHT-YEL SW 4	CPU/SND J6-P6
9	GRN-BRN (DRV)	CPU/SND J1-P1

Playfield Switches OPTO Transceiver PCBs (500-6775-00) Schematic

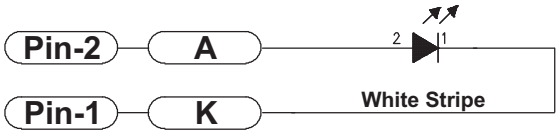

Mini PCB OPTO 12" Lead (Black Bracket) 500-6775-00

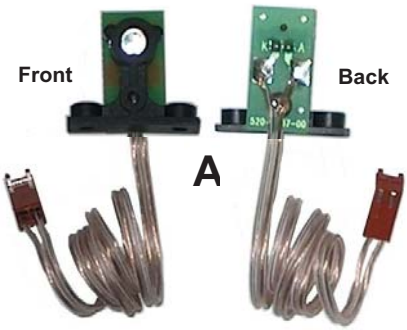

Playfield Switches OPTO Transceiver PCBs (500-6775-00) Component Layout & Parts

ITEM	QTY	PART NUMBER	REF-DESIGNATOR	DESCRIPTION
A	8	**500-6775-00**	**MINI PCB OPTO ASM WHT / 12" LEAD**	**PCB Assy.** (with all **Items 1-5**)
—	**1**	520-5237-00	**Mini OPTO Trans. or Rec. Board**	**PCB Only Plain**
01	1	545-6092-00		Black Bracket (Plastic) Holder
02	1	237-5909-00		#4-40 X 1/4 PPH Screw
03	**1**	**165-5052-00**		**LED (Ultra Bright Red)**
04	1	601-5023-12	K, A	12" Speaker Wire (1-Side White Stripe)
05	1	045-5020-02	*Note White Strip to Pin-1*	2-Pin Cn., .100 **KK Cmp Trm** Molex 08-50-0113

Playfield OPTO Transmitter / Receiver Amplifier PCB (520-5239-01) Schematic

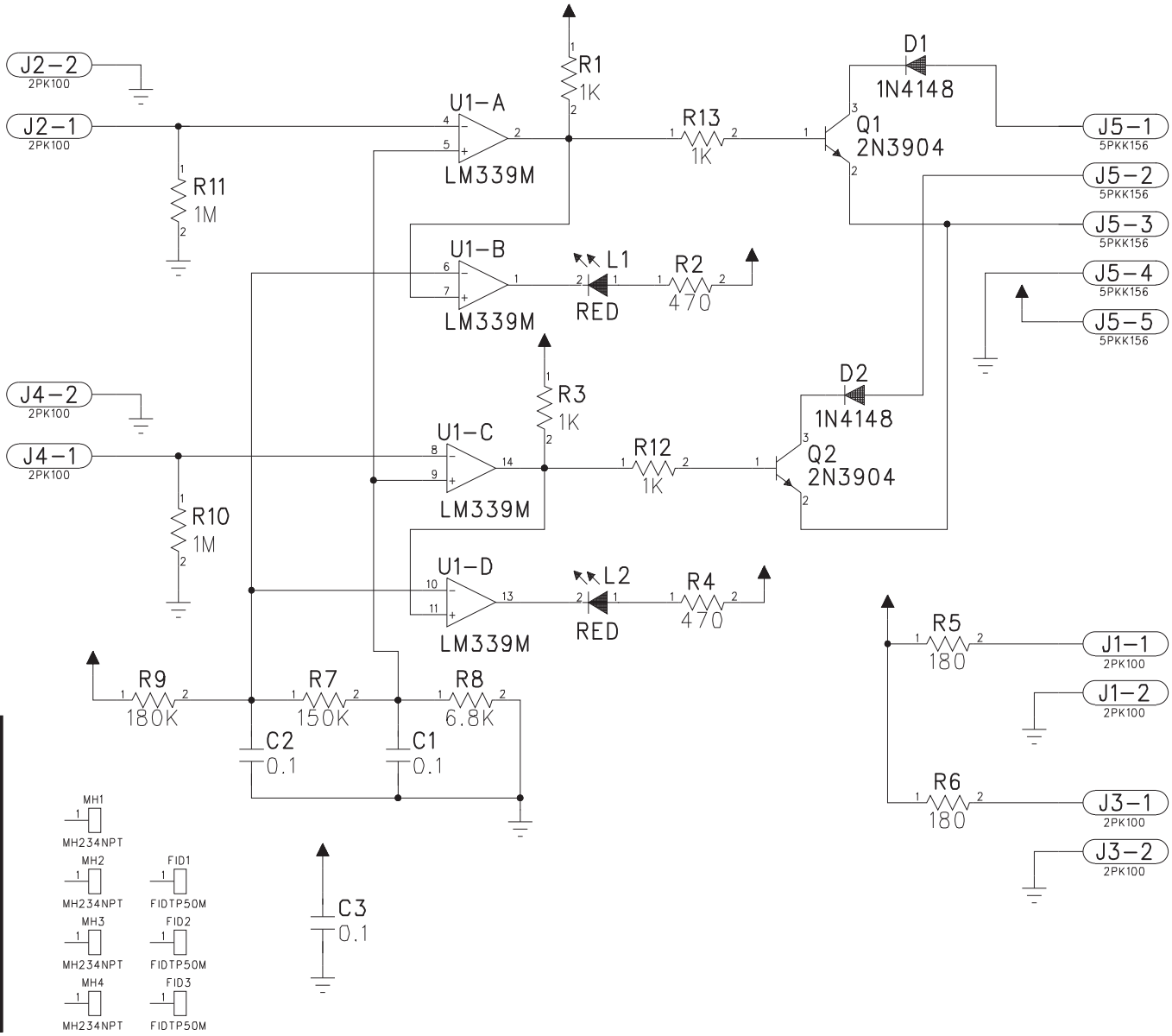

Playfield OPTO Transmitter/Receiver Amplifier PCB (520-5239-01) Component Layout & Parts
(for OPTO Switches 52, 54, 56 & 59)

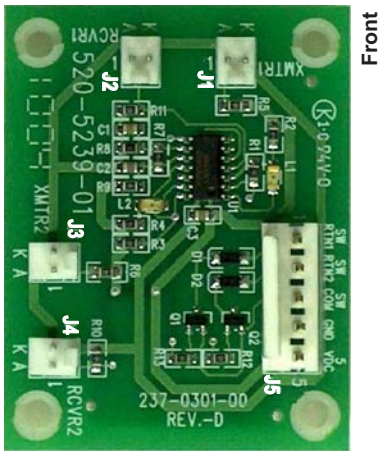

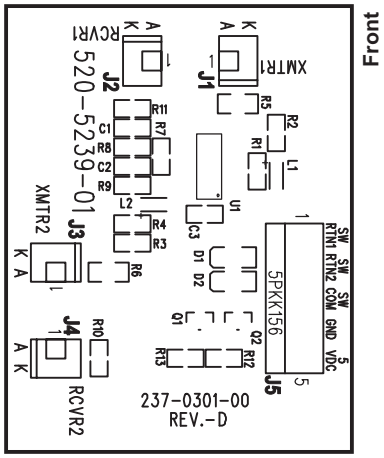

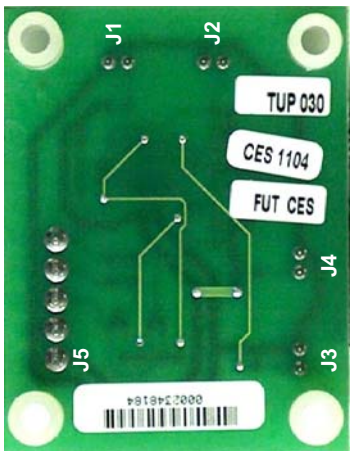

ITEM	QTY	PART NUMBER	REF-DESIGNATOR	DESCRIPTION
—	2	520-5239-01	OPTO Transmitter/Receiver Amplifier Board	**Complete PCB Assembly**
01	1		R7	SMT 150K Ω 1/10W Resistor 805, 5%
02	2		R5, R6	SMT 180 Ω 1/10W Resistor 805, 5%
03	1	*If a part is required where a part number is not provided, call Technical Support (see back of cover).*	R9	SMT 180K Ω 1/10W Resistor 805, 5%
04	4		R1, R3, R12, R13	SMT 1K Ω 1/10W Resistor 805, 5%
05	2		R10, R11	SMT 1M Ω 1/10W Resistor 805, 5%
06	2		R2, R4	SMT 470 Ω 1/10W Resistor 805, 5%
07	1		R8	SMT 6.8K Ω 1/10W Resistor 805, 5%
08	3		C1, C2, C3	SMT Cer. .1uF 50v Cap., 10% X7R
09	2		D1, D2	1N4148W, Diode, 100v, 350MW
10	2		Q1, Q2	MMST3904, NPN, 40v, .02A
11	1		U1	LM339M, Low Power Offset QUA
12	4	Mfg. 22-23-2021	J1, J2, J3, J4	2-Pin, 0.1 Header (1 Row, VT, Tin)
13	1	Mfg. 640445-5	J5	5-Pin, .156 Header (1 Row, VT, Tin)
14	2	Mfg. **APT3216SURC**	L1, L2	LEDD-SMT, Red 1206
15	4		n/a	**Spacer (Nylon), .153" ID X 9/32" OD X 3/8"**

Playfield OPTO Transmitter/Receiver Amplifier PCB (520-5239-01) Wiring (General)
(for OPTO Switches 52, 54, 56 & 59)

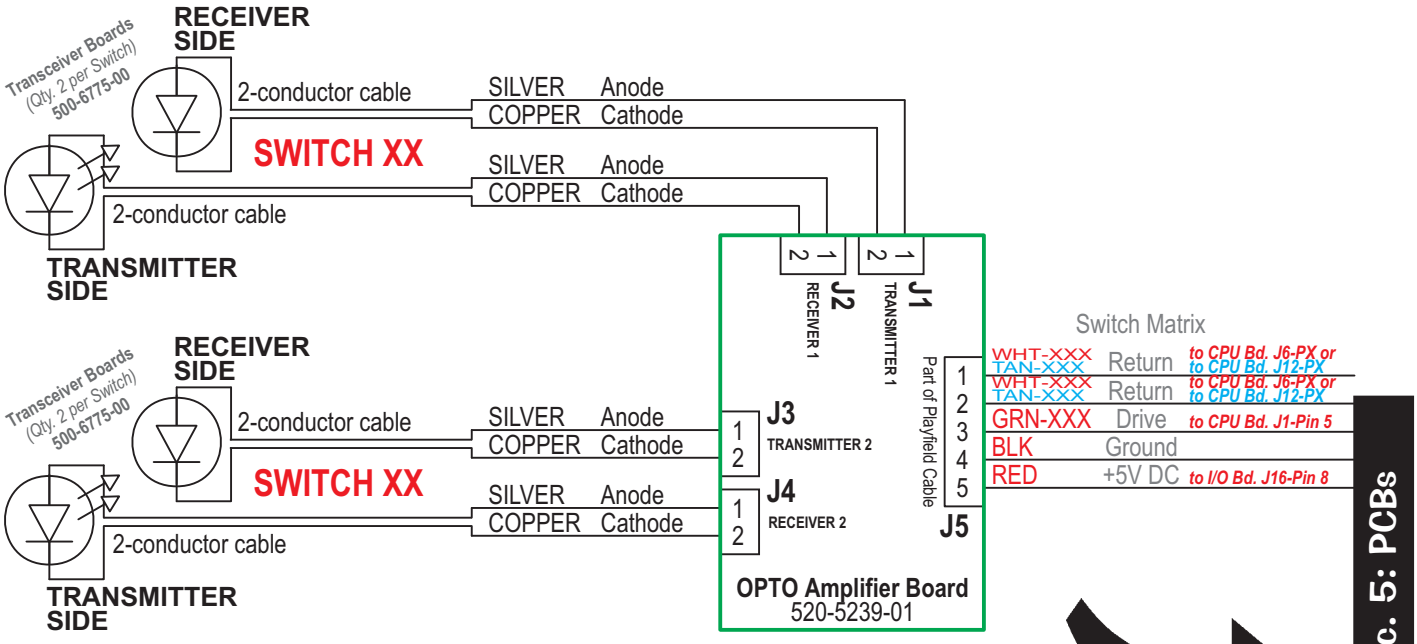

For details on Board Wiring Configuration for Boards 1 & 2, see opposite page.

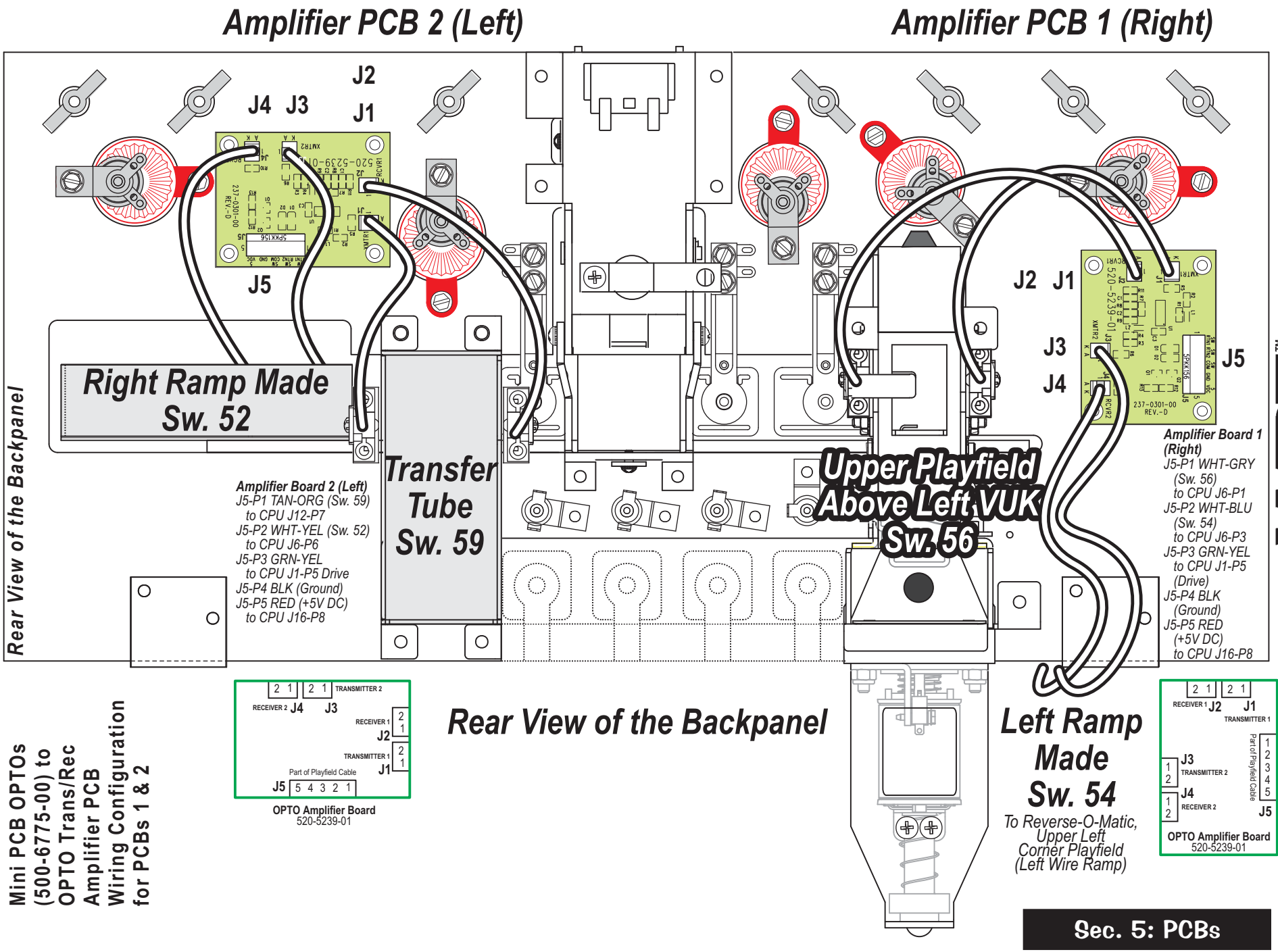

Mini PCB OPTOs (500-6775-00) to OPTO Trans/Rec Amplifier PCB Wiring Configuration for PCBs 1 & 2

OPTO Interrupter (520-5251-00) Schematic
(for OPTO Switch 63)

U-Shaped OPTO
Located on the Ace-in-the Hole Assembly
Sw. 53, Jail Bars Up

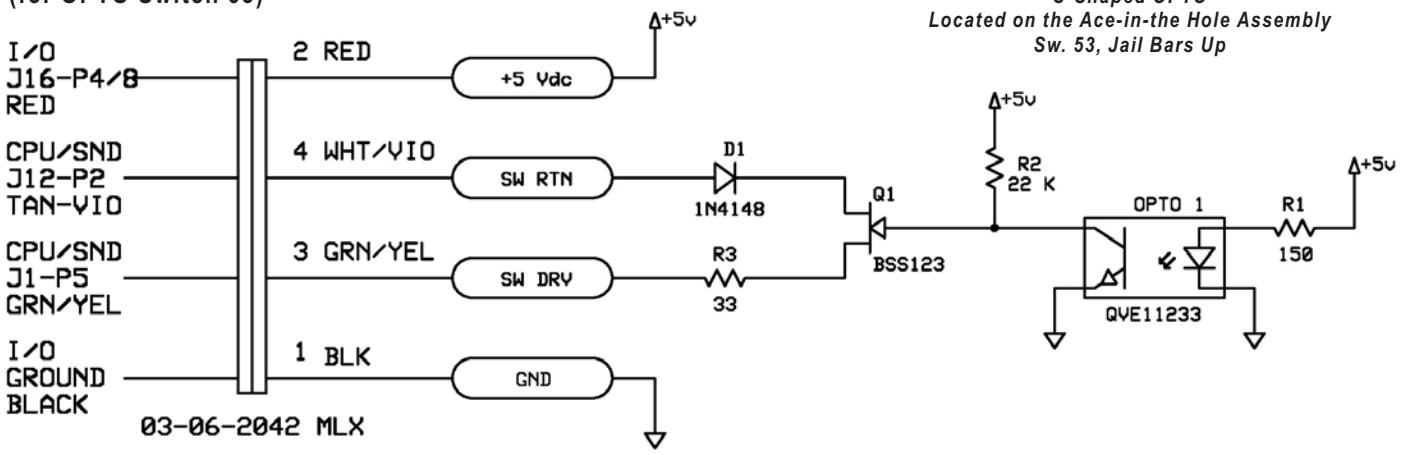

OPTO Transmitter (520-5247-00) Schematic
(for OPTO Switches 57 [front] & 58 [rear])

OPTO PCB (Top)
Located on the Ace-in-the Hole Assembly
Sw. 57, Jail Bars Bash, Sw. 58 Jail Bars Rest

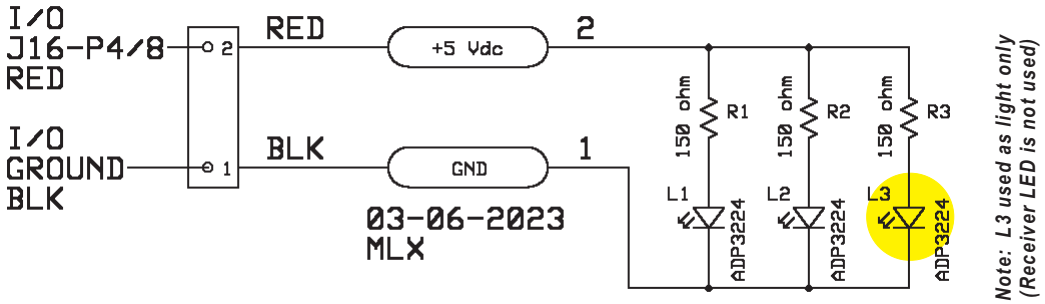

OPTO Receiver (520-5248-00) Schematic
(for OPTO Switches 57 [front] & 58 [rear])

OPTO PCB (Bottom)
Located on the Jail/Mouse Trap Assembly

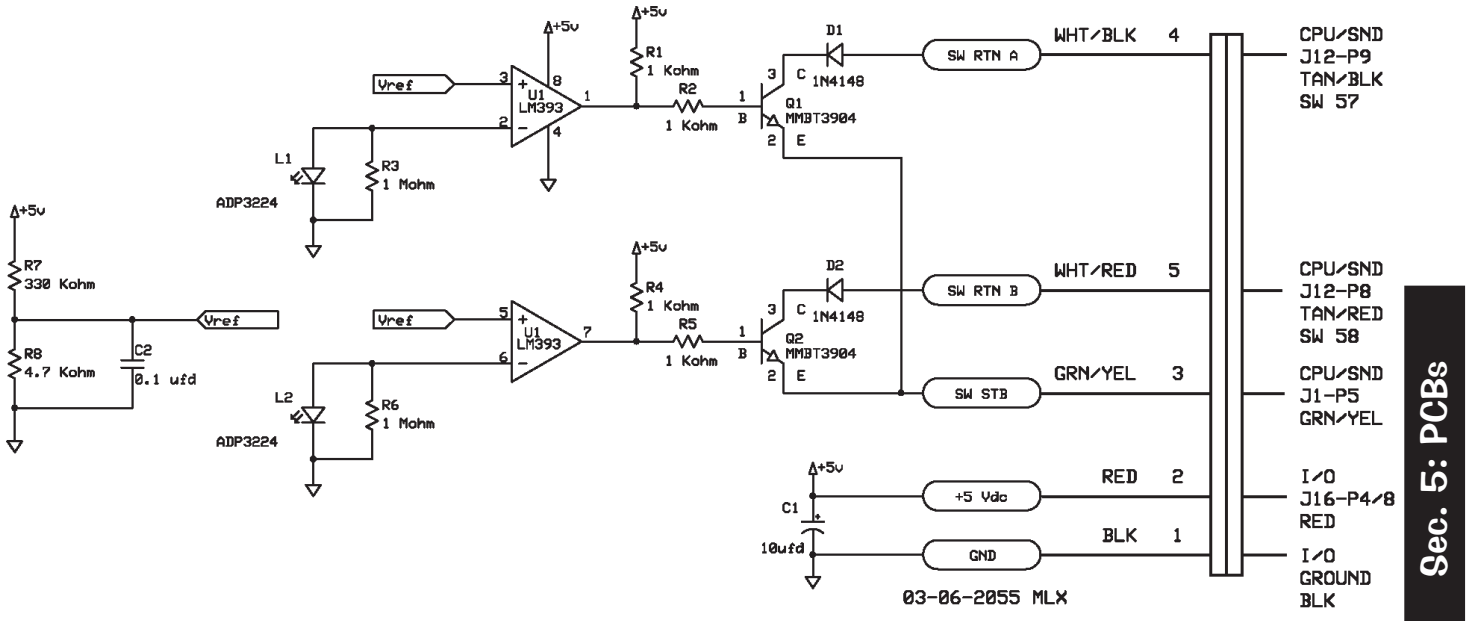

14-Block LED PCB (520-5250-14) Schematic (Sheet 1 of 2)

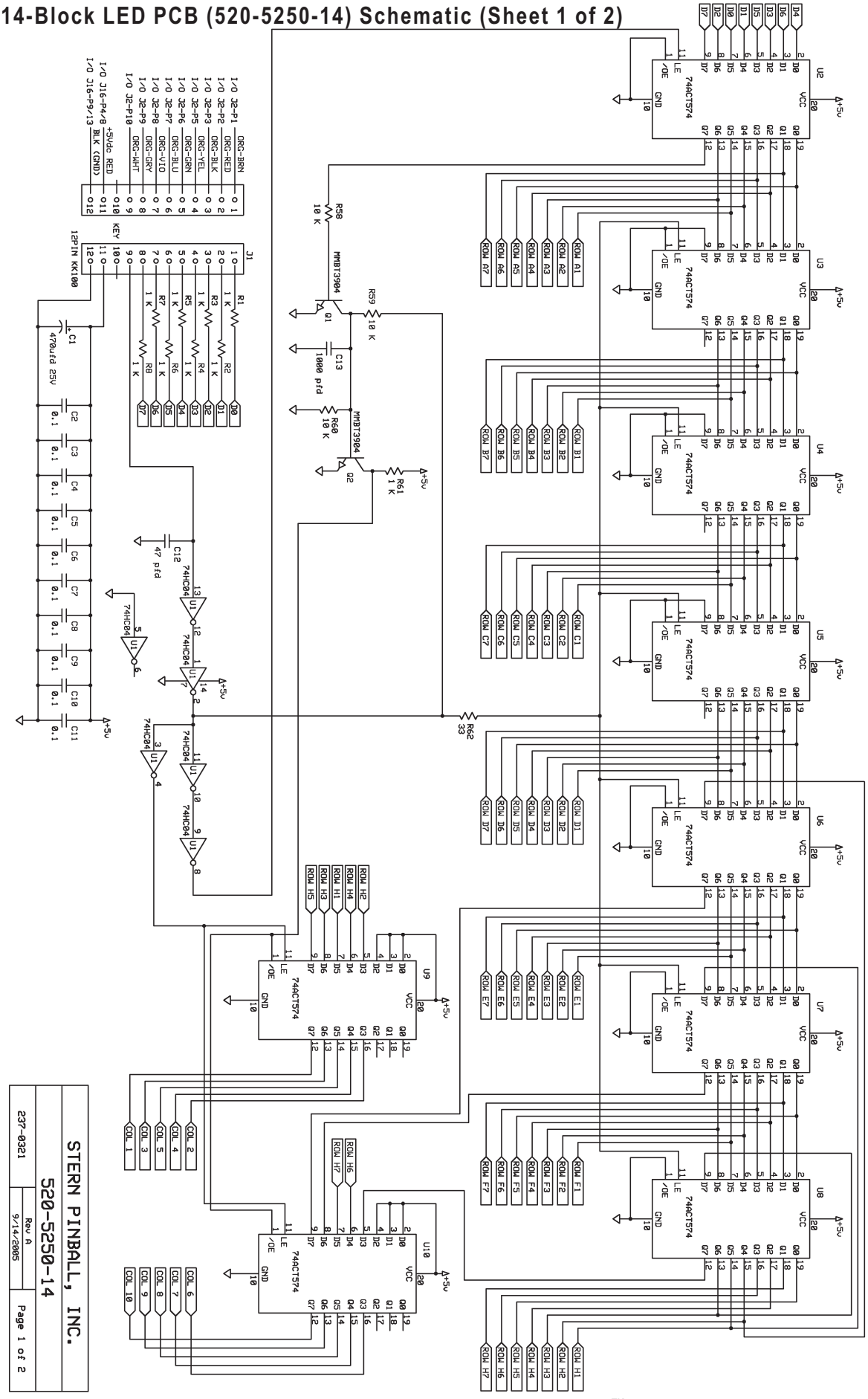

Sec. 5: PCBs

Section 5, Chapter 4
Page 140

WPT™
WORLD POKER TOUR

Printed Circuit
Boards (PCBs)

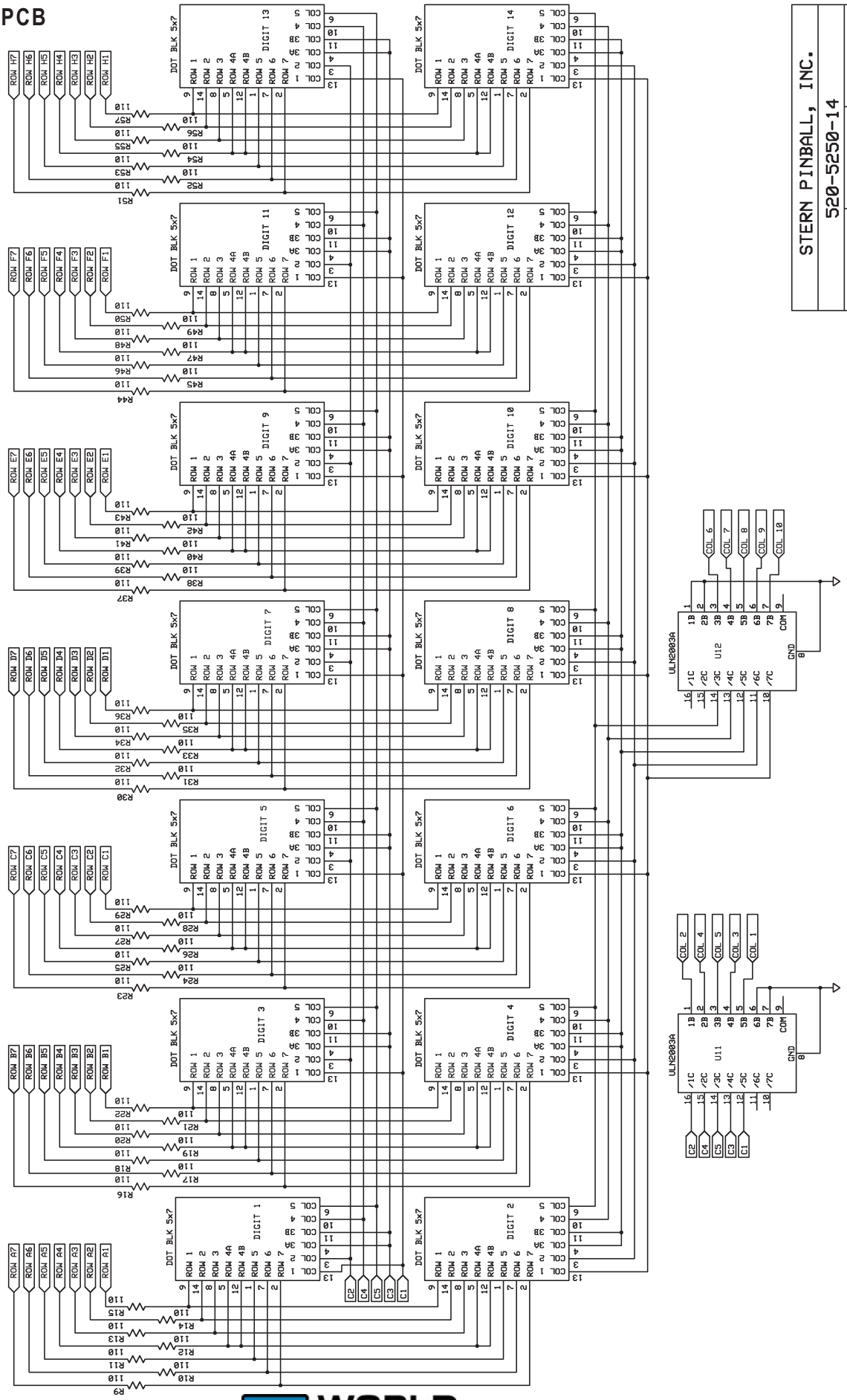
STERN PINBALL, INC.
520-5250-14
Rev A
9/14/2005
237-0321
Page 2 of 2
DOT BLK 5x7
DIGIT 13
DIGIT 14
DIGIT 11
DIGIT 12
DIGIT 9
DIGIT 10
DIGIT 7
DIGIT 8
DIGIT 5
DIGIT 6
DIGIT 3
DIGIT 4
DIGIT 1
DIGIT 2
ROW H7
ROW H6
ROW H5
ROW H4
ROW H3
ROW H2
ROW H1
ROW F7
ROW F6
ROW F5
ROW F4
ROW F3
ROW F2
ROW F1
ROW E7
ROW E6
ROW E5
ROW E4
ROW E3
ROW E2
ROW E1
ROW D7
ROW D6
ROW D5
ROW D4
ROW D3
ROW D2
ROW D1
ROW C7
ROW C6
ROW C5
ROW C4
ROW C3
ROW C2
ROW C1
ROW B7
ROW B6
ROW B5
ROW B4
ROW B3
ROW B2
ROW B1
ROW A7
ROW A6
ROW A5
ROW A4
ROW A3
ROW A2
ROW A1
ULN2003A
U12
U11
COL 6
COL 7
COL 8
COL 9
COL 10
COL 2
COL 4
COL 5
COL 3
COL 1
C2
C4
C5
C3
C1
COM
GND

Q21 50V Step-Up Driver PCB (520-5254-00) Schematic
(for Coil #21 Bumper Eject))

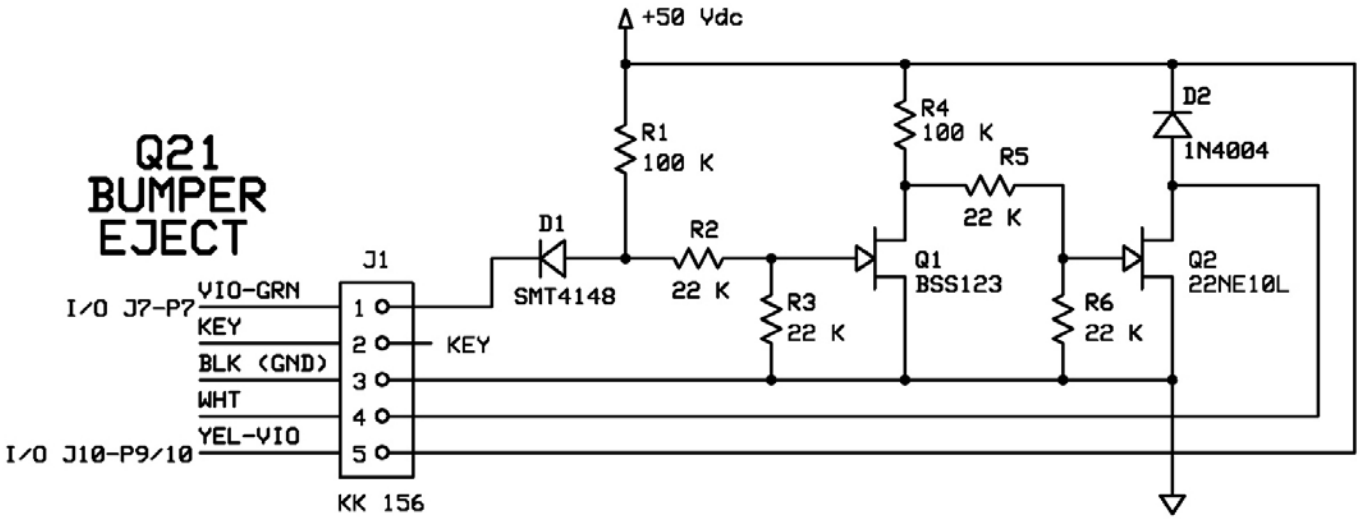

Q21 50V Step-Up Driver PCB (520-5254-00) Component Layout
(for Coil #21 Bumper Eject))

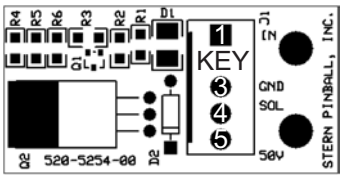

Appendixes A through J

Table of Contents for Appendixes

- **Appendix A : Pinball Game Firmware Table A1-A2**
  - ▶ **[White Star Board System and S.A.M. System Only*]**
    - ▷ ... describes the ROM / Chip Size / Program & Raw Part Number / USA Version / Check Sum and CPU/Sound PCB I & II ROM locations for Games Apollo 13 — Grand Prix (White Star Games); World Poker Tour – current (S.A.M. Games).
- **Appendix B : Semi-Conductors / I.C.'s / Relays Cross-Reference Table B1**
  - ▷ ...describes diodes and transistors with Source Number, SPI Part Number, NTE Number, ECG Number, Radio Shack Number & RCA Part Number *(If applicable).*
- **Appendix C : Production Start Date, Manual Part N°, ROM Size & Positions and Jumper W6 .. C1**
  - ▶ **[White Star Board System and S.A.M. System Only*]**
    - ▷ ...provides the Production Start Date, Manual Part Number, ROM Position(s), and Jumpers Installed for Games Apollo 13 — Grand Prix (White Star Games); World Poker Tour – current (S.A.M. Games).
- **Appendix D : Board Type Table D1-D2**
  - ▶ **[White Star Board System and S.A.M. System Only*]**
    - ▷ ...provides the Flipper**, I/O Power Driver, CPU/Sound, Display Power Supply, Dot Matrix Display, Display Controller, OPTOs and Misc. Board Part Numbers for Games Apollo 13 — Grand Prix (White Star Games); World Poker Tour – current (S.A.M. Games). ***Flipper Bd. with White Star Bd. System for A13 & Golden Eye only.)*
- **Appendix E : Generic Coil Cross-Reference Guide & Flipper Coil Table E1-E2**
  - ▶ **[White Star Board System and S.A.M. System Only*]**
    - ▷ ...provides the Coils used with Part Number and Gauge-Turns *(of the coil)* for Games Apollo 13 — Grand Prix (White Star Games); World Poker Tour – current (S.A.M. Games).
- **Appendix F : Motor Specification Table F1-F2**
  - ▶ **[White Star Board System and S.A.M. System Only*]**
    - ▷ ...provides all the Motor Function, Specifications and Part Number for Games Apollo 13 — Grand Prix (White Star Games); World Poker Tour – current (S.A.M. Games)..
- **Appendix G : Part Number Prefix Classification Codes G1**
  - ▷ ...explains how our Part Numbers are developed to help sort parts easier.
- **Appendix H : Playfield Inserts (Plastic Light Covers) H1**
  - ▷ ...gives a pictoral view with the name and Part Nr. of all the inserts used *(with Color Code Chart).*
- **Appendix I : Stand-Up Targets & Modular Stand-Up Targets I1-I2**
  - ▷ ...gives a pictoral view with the name and Part Number of all the Single Stand-Up Targets used *(with Color Code Chart).*
- **Appendix J : Coin Cards (USA & International) J1**
  - ▷ ...gives a pictoral view with the name and Part Number of all the current Coin Cards for USA, Canada, Euro and other International Countries. *For all Coin Cards and/or free Coin Card files for download, visit our website : www.sternpinball.com*

APPENDIX A

Pinball Game Firmware (White Star Board System* Only) Table

See website for the latest International Code or Updated USA version / checksums

ROM	Chip Size	Program Part Nº	USA Ver. & Check Sum	Bd. Loc.	Raw Part Nº
Apollo 13 (Note 1)					
Game ROM	(1M)	965-0208-00	**A5.01 | $09FF**	**U210**	960-5009-00
Sound	(512K)	965-0212-00	1.00 | $5244	U7	960-7001-02
Display	(4M)	965-0213-00	**A5.00 | $B92B**	**ROM 0**	960-5015-01
Voice 1	(4M)	965-0209-00	1.00 | $7FC7	U17	n/a (masked)
Voice 2	(4M)	965-0210-00	1.00 | $8E55	U21	n/a (masked)
Voice 3	(4M)	965-0211-00	1.00 | $08EE	U36	n/a (masked)
Golden Eye (Note 1)					
Game ROM	(1M)	965-0214-42	**A4.04 | $3FFF**	**U210**	960-5009-00
Sound	(512K)	965-0217-42	1.00 | $D615	U7	960-7001-02
Display	(4M)	965-0218-42	**A4.00 | $E6ED**	**ROM 0**	960-5015-01
Voice 1	(4M)	965-0215-42	1.00 | $3E32	U17	n/a (masked)
Voice 2	(4M)	965-0216-42	1.00 | $71F0	U21	n/a (masked)
Twister (Note 2)					
Game ROM	(1M)	965-0219-41	**A4.05 | $E9FF**	**U210**	960-5009-00
Sound	(512K)	965-0221-41	1.00 | $1FFF	U7	960-7001-02
Display	(4M)	965-0222-41	**A4.00 | $FD01**	**ROM 0**	960-5015-01
Voice 1	(4M)	965-0220-41	1.00 | $3650	U17	960-5015-01
Voice 2	(4M)	965-0223-41	1.00 | $9300	U21	960-5015-01
ID4: Independence Day (Note 2)					
Game ROM	(1M)	965-0224-45	**A2.02 | $9CFF**	**U210**	960-5009-00
Sound	(512K)	965-0227-45	1.00 | $222B	U7	960-7001-02
Display	(4M)	965-0228-45	**A2.00 | $ABF7**	**ROM 0**	960-5015-01
Voice 1	(4M)	965-0225-45	1.00 | $3AE1	U17	960-5015-01
Voice 2	(4M)	965-0226-45	1.00 | $206E	U21	960-5015-01
Space Jam (Note 2)					
Game ROM	(1M)	965-0229-43	**A3.00 | $E6FF**	**U210**	960-5009-00
Sound	(512K)	965-0233-43	1.00 | $F1E7	U7	960-7001-02
Display	(4M)	965-0234-43	**A3.00 | $0057**	**ROM 0**	960-5015-01
Voice 1	(4M)	965-0230-43	1.00 | $DBA8	U17	960-5015-01
Voice 2	(4M)	965-0231-43	1.00 | $DDF1	U21	960-5015-01
Voice 3	(4M)	965-0232-43	1.00 | $F32A	U36	960-5015-01
The Star Wars Trilogy - Special Edition (S.E.) (Note 2)					
Game ROM	(1M)	965-0235-56	**A4.03 | $5EFF**	**U210**	960-5009-00
Sound	(512K)	965-0238-56	1.00 | $4A7D	U7	960-7001-02
Display	(4M)	965-0239-56	**A4.00 | $8817**	**ROM 0**	960-5015-01
Voice 1	(4M)	965-0236-56	1.00 | $E66B	U17	960-5015-01
Voice 2	(4M)	965-0237-56	1.00 | $8F54	U21	960-5015-01
The Lost World: Jurassic Park (Note 2)					
Game ROM	(1M)	965-0240-53	**A2.02 | $C8FF**	**U210**	960-5009-00
Sound	(512K)	965-0243-53	1.00 | $A35B	U7	960-7001-02
Display	(4M)	965-0244-53	**A2.01 | $7F46**	**ROM 0**	960-5015-01
Voice 1	(4M)	965-0241-53	1.00 | $1D27	U17	960-5015-01
Voice 2	(4M)	965-0242-53	1.00 | $8DA4	U21	960-5015-01
The X-Files (Note 2)					
Game ROM	(1M)	965-0245-46	**A3.03 | $A2FF**	**U210**	960-5009-00
Sound	(512K)	965-0248-46	1.00 | $6648	U7	960-7001-02
Display	(4M)	965-0249-46	**A3.00 | $66D0**	**ROM 0**	960-5015-01
Voice 1	(4M)	965-0246-46	1.00 | $349D	U17	960-5015-01
Voice 2	(4M)	965-0247-46	1.00 | $629C	U21	960-5015-01
Starship Troopers (Note 3)					
Game ROM	(1M)	965-0250-59	**A2.00 | $85FF**	**U210**	960-5009-00
Sound	(512K)	965-0253-59	1.00 | $64B2	U7	960-7001-02
Display	(4M)	965-0254-59	**A2.00 | $E77B**	**ROM 0**	960-5015-01
Voice 1	(4M)	965-0251-59	1.00 | $152A	U17	960-5015-01
Voice 2	(4M)	965-0252-59	1.00 | $0291	U21	960-5015-01
Voice 3	(4M)	965-0255-59	1.00 | $95A7	U36	960-5015-01
Viper Night Drivin' (Note 4)					
Game ROM	(1M)	965-0266-35	**A2.01 | $C5FF**	**U210**	960-5009-00
Sound	(512K)	965-0271-35	1.00 | $4DF8	U7	960-7001-02
Display	(4M)	965-0272-35	**A2.01 | $C17D**	**ROM 0**	960-5015-01
Voice 1	(4M)	965-0267-35	1.00 | $8018	U17	960-5015-01
Voice 2	(4M)	965-0268-35	1.00 | $2157	U21	960-5015-01
Voice 3	(4M)	965-0269-35	1.00 | $B5A6	U36	960-5015-01
Voice 4	(4M)	965-0270-35	1.00 | $D01E	U37	960-5015-01
Lost In Space (Note 4)					
Game ROM	(1M)	965-0282-60	**A1.01 | $B2FF**	**U210**	960-5009-00
Sound	(512K)	965-0287-60	1.00 | $A6AF	U7	960-7001-02
Display	(4M)	965-0288-60	**A1.02 | $32AB**	**ROM 0**	960-5015-01
Voice 1	(4M)	965-0283-60	1.00 | $4391	U17	960-5015-01
Voice 2	(4M)	965-0284-60	1.00 | $8215	U21	960-5015-01
Voice 3	(4M)	965-0285-60	1.00 | $5B32	U36	960-5015-01
Voice 4	(4M)	965-0286-60	1.00 | $8971	U37	960-5015-01
Godzilla (Note 4)					
Game ROM	(1M)	965-0289-40	**A2.05| $B1FF**	**U210**	960-5009-00
Sound	(512K)	965-0294-40	1.00 | $0CC8	U7	960-7001-02
Display	(4M)	965-0295-40	**A2.00 | $C929**	**ROM 0**	960-5015-01
Voice 1	(4M)	965-0290-40	1.00 | $0D75	U17	960-5015-01
Voice 2	(4M)	965-0291-40	1.00 | $CCCF	U21	960-5015-01
Voice 3	(4M)	965-0292-40	1.00 | $227F	U36	960-5015-01
Voice 4	(4M)	965-0293-40	1.00 | $DB69	U37	960-5015-01
South Park (Notes 4, 5)					
Game ROM	(1M)	965-0301-71	**A1.03 | $58FF**	**U210**	960-5009-00
Sound	(512K)	965-0306-71	1.00 | $1286	U7	960-7001-02
Display	(4M)	965-0307-71	**A1.01 | $166F**	**ROM 0**	960-5015-01
Voice 1	(8M)	965-0302-71	1.00 | $7BF8	U17	960-5016-00
Voice 2	(8M)	965-0303-71	1.00 | $9CCC	U21	960-5016-00
Voice 3	(8M)	965-0304-71	1.00 | $ADD9	U36	960-5016-00
Voice 4	(8M)	965-0305-71	1.00 | $6659	U37	960-5016-00
Harley-Davidson® (Notes 4, 5, 6) *Original (1999-2001)*					
Game ROM	(1M)	965-0319-67	**A1.03 | $3EFF**	**U210**	960-5009-00
Sound	(512K)	965-0320-67	1.00 | $F4FF	U7	960-7001-02
Display	(4M)	965-0321-67	**A1.04 | $FC7C**	**ROM 0**	960-5015-01
Voice 1	(8M)	965-0322-67	1.00 | $CD26	U17	960-5016-00
Voice 2	(8M)	965-0323-67	1.00 | $9396	U21	960-5016-00
Voice 3	(8M)	965-0324-67	1.00 | $FB72	U36	960-5016-00
Voice 4	(4M)	965-0325-67	1.00 | $6100	U37	960-5015-01
▶ **Harley-Davidson® (Notes 4, 5, 6, 8) *2nd Edition (2002-2003)***					
Game ROM	(1M)	965-0319-67**A**	**A1.08 | $23FF**	**U210**	960-5009-00
Display	(4M)	965-0321-67**A**	**A1.05 | $B594**	**ROM 0**	960-5015-01
▶ **Harley-Davidson® (Notes 4, 5, 6, 8) *3rd Edition (2004)***					
Game ROM	(1M)	965-0319-87	**A4.00 | $1CFF**	**U210**	960-5009-00
Display	(4M)	965-0321-87	**A4.00 | $F4FF**	**U5**	960-5015-01
Striker Xtreme (Notes 4, 5)					
Game ROM	(1M)	965-0326-68	**A1.03 | $E4FF**	**U210**	960-5009-00
Sound	(512K)	965-0327-68	1.00 | $3BCA	U7	960-7001-02
Display	(4M)	965-0328-68	**A1.03 | $1957**	**ROM 0**	960-5015-01
Voice 1	(8M)	965-0329-68	1.00 | $482A	U17	960-5016-00
Voice 2	(8M)	965-0330-68	1.00 | $7312	U21	960-5016-00
Voice 3	(8M)	965-0331-68	1.00 | $DE2F	U36	960-5016-00
Voice 4	(8M)	965-0332-68	1.00 | $C508	U37	960-5016-00
NFL (Notes 4, 5) *Not on CD-R or Website: Code through Distributor Only.*					
Game ROM	(1M)	965-0339-73	**A1.00 | $D2FF**	**U210**	960-5009-00
Sound	(512K)	965-0340-73	1.00 | $	U7	960-7001-02
Display	(4M)	965-0341-73	**A1.01 | $845A**	**ROM 0**	960-5015-01
Voice 1	(8M)	965-0342-73	1.00 | $	U17	960-5016-00
Voice 2	(8M)	965-0343-73	1.00 | $	U21	960-5016-00
Voice 3	(8M)	965-0344-73	1.00 | $	U36	960-5016-00
Voice 4	(8M)	965-0345-73	1.00 | $	U37	960-5016-00
Sharkey's Shootout (Notes 4, 5)					
Game ROM	(1M)	965-0333-72	**A2.11 | $49FF**	**U210**	960-5009-00
Sound	(512K)	965-0334-72	1.01 | $9796	U7	960-7001-02
Display	(4M)	965-0335-72	**A2.01 | $6C33**	**ROM 0**	960-5015-01
Voice 1	(8M)	965-0336-72	1.00 | $58EA	U17	960-5016-00
Voice 2	(8M)	965-0337-72	1.00 | $272B	U21	960-5016-00
Voice 3	(8M)	965-0338-72	1.00 | $41AE	U36	960-5016-00
High Roller Casino (Notes 4, 5)					
Game ROM	(1M)	965-0346-65	**A3.00 | $90FF**	**U210**	960-5009-00
Sound	(512K)	965-0347-65	1.00 | $581C	U7	960-7001-02
Display	(4M)	965-0348-65	**A3.00 | $74B3**	**ROM 0**	960-5015-01
Voice 1	(8M)	965-0349-65	1.00 | $E12D	U17	960-5016-00
Voice 2	(8M)	965-0350-65	1.00 | $38F4	U21	960-5016-00
Voice 3	(8M)	965-0351-65	1.00 | $1B54	U36	960-5016-00
Voice 4	(8M)	965-0352-65	1.00 | $D720	U37	960-5016-00
Austin Powers™ (Notes 4, 5)					
Game ROM	(1M)	965-0353-74	**A3.02 | $5DFF**	**U210**	960-5009-00
Sound	(512K)	965-0354-74	1.00 | $DA7B	U7	960-7001-02
Display	(4M)	965-0035-74	**A3.00 | $6A34**	**ROM 0**	960-5015-01
Voice 1	(8M)	965-0356-74	1.00 | $D2B9	U17	960-5016-00
Voice 2	(8M)	965-0357-74	1.00 | $9E75	U21	960-5016-00
Voice 3	(8M)	965-0358-74	1.00 | $51F3	U36	960-5016-00
Voice 4	(8M)	965-0359-74	1.00 | $0AE5	U37	960-5016-00
MONOPOLY® (Notes 4, 5)					
Game ROM	(1M)	965-0360-75	**A3.20 | $07FF**	**U210**	960-5009-00
Sound	(512K)	965-0361-75	1.00 | $8C18	U7	960-7001-02
Display	(4M)	965-0362-75	**A3.01 | $A381**	**ROM 0**	960-5015-01
Voice 1	(8M)	965-0363-75	1.00 | $35E6	U17	960-5016-00
Voice 2	(8M)	965-0364-75	1.00 | $B35A	U21	960-5016-00
Voice 3	(8M)	965-0365-75	1.00 | $8A9F	U36	960-5016-00
Playboy (Notes 4, 5, 7)					
Game ROM	(1M)	965-0367-76	**A5.00 | $7DFF**	**U210**	960-5009-00
Sound	(512K)	965-0368-76	1.02 | $E7C2	U7	960-7001-02
Display	(4M)	965-0369-76	**A5.00 | $A5FF**	**ROM 0**	960-5015-01
Voice 1	(8M)	965-0370-76	1.00 | $9ABE	U17	960-5016-00
Voice 2	(8M)	965-0371-76	1.00 | $9F34	U21	960-5016-00
Voice 3	(8M)	965-0372-76	1.00 | $374B	U36	960-5016-00
Voice 4	(8M)	965-0373-76	1.00 | $237A	U37	960-5016-00
RollerCoaster Tycoon™ (Notes 4, 5, 7)					
Sound	(512K)	965-0374-78	1.00 | $F663	U7	960-7001-02
Game ROM	(1M)	965-0375-78	**A7.02| $E5FF**	**U210**	960-5009-00
Voice 1	(8M)	965-0377-78	1.00 | $3C4A	U17	960-5016-00
Voice 2	(8M)	965-0378-78	1.00 | $057A	U21	960-5016-00
Voice 3	(8M)	965-0379-78	1.00 | $04D7	U36	960-5016-00
Display	(4M)	965-0376-78	**A7.01 | $8DDB**	**U5** Disp. Cntrlr.	
The Simpsons™ Pinball Party (Notes 4, 5, 7)					
Sound	(512K)	965-0381-77	1.01 | $A7EE	U7	960-7001-02
Game ROM	(1M)	965-0382-77	**A4.00 | $4FFF**	**U210**	960-5009-00
Voice 1	(8M)	965-0383-77	1.00 | $9719	U17	960-5016-00
Voice 2	(8M)	965-0384-77	1.00 | $16ED	U21	960-5016-00
Voice 3	(8M)	965-0385-77	1.00 | $ADCE	U36	960-5016-00
Voice 4	(8M)	965-0386-77	1.00 | $E7E5	U37	960-5016-00
Display	(4M)	965-0387-77	**A4.00 | $8A03**	**U5** DC PCB	960-5015-01
Terminator® 3: Rise of the Machines™ (Notes 4, 5, 7)					
Sound	(512K)	965-0388-79	1.00 | $D2FD	U7	960-7001-02
Game ROM	(1M)	965-0389-79	**A4.00 | $F8FF**	**U210**	960-5009-00
Voice 1	(8M)	965-0390-79	1.00 | $1838	U17	960-5016-00
Voice 2	(8M)	965-0391-79	1.00 | $F0D5	U21	960-5016-00
Voice 3	(8M)	965-0392-79	1.00 | $89DA	U36	960-5016-00
Voice 4	(8M)	965-0393-79	1.00 | $1200	U37	960-5016-00
Display	(4M)	965-0394-79	**A4.00 | $6E49**	**U5** DC PCB	960-5015-01
The Lord of the Rings™ (Notes 7, 8)					
Sound	(512K)	965-0401-80	1.01 | $36BC	U7	960-7001-02
Game ROM	(1M)	965-0402-80	**A10.00 | $84FF**	**U210**	960-5009-00
Voice 1	(8M)	965-0403-80	1.00 | $1792	U17	960-5016-00
Voice 2	(8M)	965-0404-80	1.00 | $67F1	U21	960-5016-00
Voice 3	(8M)	965-0405-80	1.00 | $89B6	U36	960-5016-00
Voice 4	(8M)	965-0406-80	1.00 | $EA49	U37	960-5016-00
Display	(4M)	965-0407-80	**A10.00 | $1669**	**U5** DC PCB	960-5015-01

Sound & Voice 1-4 identical to above H-D® Original.

footnotes : 1 — 8 *see the bottom of the next page (**A2**).*

APPENDIX A

Pinball Game Firmware (White Star Board System* & S.A.M. System** Only) Table

See website for the latest International Code or Updated USA version / checksums

ROM	Chip Size	Program Part Nº	USA Ver. & Check Sum	Bd. Loc.	Raw Part Nº
Ripley's Believe It or Not!® (Notes 7, 8)					
Sound	(512K)	965-0408-81	1.00 | $D93D	U7	960-7001-02
Game ROM	(1M)	965-0409-81	**A3.20 | $43FF**	**U210**	960-5009-00
Voice 1	(8M)	965-0410-81	1.00 | $067B	U17	960-5016-00
Voice 2	(8M)	965-0411-81	1.00 | $C8B8	U21	960-5016-00
Voice 3	(8M)	965-0412-81	1.00 | $64C2	U36	960-5016-00
Voice 4	(8M)	965-0413-81	1.00 | $5341	U37	960-5016-00
Display	(4M)	965-0414-81	**A3.00 | $DE4B**	**U5** DC PCB	960-5015-01
Elvis® (Notes 7, 8)					
Sound	(512K)	965-0415-84	1.00 | $8CD2	U7	960-7001-02
Game ROM	(1M)	965-0416-84	**A5.00 | $50FF**	**U210**	960-5009-00
Voice 1	(8M)	965-0417-84	1.00 | $538D	U17	960-5016-00
Voice 2	(8M)	965-0418-84	1.00 | $8BCD	U21	960-5016-00
Voice 3	(8M)	965-0419-84	1.00 | $60F8	U36	960-5016-00
Voice 4	(8M)	965-0420-84	1.00 | $14D8	U37	960-5016-00
Display	(4M)	965-0421-84	**A5.00 | $A1F6**	**U5** DC PCB	960-5015-01
The Sopranos℠ (Notes 7, 8)					
Sound	(512K)	965-0422-85	4.00 | $9B5A	U7	960-7001-02
Game ROM	(1M)	965-0423-85	**A5.00 | $5BFF**	**U210**	960-5009-00
Voice 1	(8M)	965-0424-85	3.00 | $F01E	U17	960-5016-00
Voice 2	(8M)	965-0425-85	1.04 | $C14C	U21	960-5016-00
Voice 3	(8M)	965-0426-85	1.04 | $47A3	U36	960-5016-00
Voice 4	(8M)	965-0427-85	1.04 | $ADCD	U37	960-5016-00
Display	(4M)	965-0428-85	**A5.00 | $B4BB**	**U5** DC PCB	960-5015-01
NASCAR® (Notes 7, 8)					
Sound	(512K)	965-0429-86	2.00 | $32B3	U7	960-7001-02
Game ROM	(1M)	965-0430-86	**A4.50 | $39FF**	**U210**	960-5009-00
Voice 1	(8M)	965-0431-86	2.00 | $CFFB	U17	960-5016-00
Voice 2	(8M)	965-0432-86	2.00 | $22C0	U21	960-5016-00
Voice 3	(8M)	965-0433-86	2.00 | $5FC8	U36	960-5016-00
Voice 4	(8M)	965-0434-86	2.00 | $2902	U37	960-5016-00
Display	(4M)	965-0435-86	**A4.00 | $92BD**	**U5** DC PCB	960-5015-01
Grand Prix (Notes 7, 8)					
Sound	(512K)	965-0429-91	V1.00 | $6F89	U7	960-7001-02
Game ROM	(1M)	965-0430-91	**A4.50 | $5EFF**	**U210**	960-5009-00
Voice 1	(8M)	965-0431-91	1.00 | $CE0E	U17	960-5016-00
Voice 2	(8M)	965-0432-91	1.00 | $F4C6	U21	960-5016-00
Voice 3	(8M)	965-0433-91	1.00 | $057D	U36	960-5016-00
Voice 4	(8M)	965-0434-91	1.00 | $2646	U37	960-5016-00
Display	(4M)	965-0435-91	**A4.00 | $DA8E**	**U5** DC PCB	960-5015-01
[NDSE] (Notes 7, 8) *Call for more info if code update required.*					
Sound	(512K)	965-0436-97		U7	960-7001-02
Game ROM	(1M)	965-0437-97		**U210**	960-5009-00
Voice 1	(8M)	965-0438-97		U17	960-5016-00
Voice 2	(8M)	965-0439-97		U21	960-5016-00
Voice 3	(8M)	965-0440-97		U36	960-5016-00
Voice 4	(8M)	965-0441-97		U37	960-5016-00
Display	(4M)	965-0442-97		**U5** DC PCB	960-5015-01

**** GAMES BELOW THIS LINE / NEXT COLUMN ARE S.A.M. SYSTEM GAMES**

TO ORDER MEMORY STICK WITH GAME FILES FROM YOUR DISTRIBUTOR, USE SPI PART NUMBER 970-0128-00 & INCLUDE THE GAME NAME / LANGUAGE FILE(S) DESIRED.

World Poker Tour™ Pinball (WPT) (Notes 7, 9)

Boot B-02 (8M) **965-BOOT-SAM** **1.04** | $7E62 **U9** *960-5016-00 unprogrammed*

Memory Stick 128MB (970-0128-00)	Version	System	Bin Files:
English + Spanish	1.12AL	1.17+	WPT0112AL.bin
English Only	1.12A	1.17+	WPT0112A.bin
English + French	1.12AF	1.17+	WPT0112AF.bin
French Only	1.12F	1.17+	WPT0112F.bin
German + French	1.12GF	1.17+	WPT0112GF.bin
German Only	1.12G	1.17+	WPT0112G.bin
English + Italian	1.12AI	1.17+	WPT0112AI.bin
Italian Only	1.12I	1.17+	WPT0112I.bin

NOTE: THE TYPICAL SIZE PER UNZIPPED BIN FILE IS 25MB – 30MB+/–

The Simpsons™ Kooky Carnival Redemption (Note 9)

Boot B-02 (8M) **965-BOOT-SAM** **1.04** | $7E62 **U9** *960-5016-00 unprogrammed*

Memory Stick 128MB (970-0128-00)	Version	Bin Files:
English Only	1.05	SKC0105.bin
English New Jersey Only	0.09NJ	SKC0090NJ.bin

NOTE: THE TYPICAL SIZE PER UNZIPPED BIN FILE IS 5.5MB +/–

©Disney's Pirates of the Caribbean Pinball (POTC) (Notes 7, 9)

Boot B-02 (8M) **965-BOOT-SAM** **1.06** | $2014 **U9** *960-5016-00 unprogrammed*

Memory Stick 128MB (970-0128-00)	Version	System	Bin Files:
English + Spanish	1.15AS	1.17+	POTC115AS.bin
English + French	1.15AF	1.17+	POTC115AF.bin
German + French	1.15GF	1.17+	POTC115GF.bin
English + Italian	1.15AI	1.17+	POTC115AI.bin

NOTE: THE TYPICAL SIZE PER UNZIPPED BIN FILE IS 25MB – 30MB+/–

Family Guy™ Pinball (FG) (Notes 7, 9)

Boot B-02 (8M) **965-BOOT-SAM** **2.09** | $10A3 **U9** *960-5016-00 unprogrammed*

Memory Stick 128MB (970-0128-00)	Version	System	Bin Files:
English + Spanish	10.00AL	1.23+	FG1000AL.bin
English + French	10.00AF	1.23+	FG1000AF.bin
English + German	10.00AG	1.23+	FG1000GF.bin
English + Italian	10.00AI	1.23+	FG1000AI.bin

NOTE: THE TYPICAL SIZE PER UNZIPPED BIN FILE IS 25MB – 30MB+/–

Spider-Man™ Pinball (S-M) (Notes 7, 9)

Boot B-02 (8M) **965-BOOT-SAM** **2.10** | $F625 **U9** *960-5016-00 unprogrammed*

Memory Stick 128MB (970-0128-00)	Version	System	Bin Files:
English + Spanish	1.3ES	1.27+	spd_1_30_es.bin
English + French	1.3EF	1.27+	spd_1_30_ef.bin
German+French	1.3GF	1.27+	spd_1_30_gf.bin
English + Italian	1.3EI	1.27+	spd_1_30_ei.bin

NOTE: THE TYPICAL SIZE PER UNZIPPED BIN FILE IS 25MB – 30MB+/–

footnotes:

1 ROMs on CPU/Sound Bd.: 520-5136-**00** (Stereo) & Display Cont. Bd.: 520-5055-01
2 ROMs on CPU/Sound Bd.: 520-5136-**10** (Mono) & Display Cont. Bd.: 520-5055-01
3 ROMs on CPU/Sound Board: 520-5136-**15*** (Mono) (*FCC 11-97) &
Display Controller Board: 520-5055-**02*** (*FCC 11-97)

APPENDIX A

Pinball Game Firmware Table

EPROM	Chip Size	Program Part №	USA Ver.	Bd. Loc.	Raw Part №
Laser War					
CPU	(256K)	965-0004-00	LWAR.C5	C5	960-5007-00
Sound (Old)	(256K)	965-0005-00		J5	960-5007-00
Sound (Old)	(256K)	965-0006-00		J6	960-5007-00
Sound (Old)	(256K)	965-0007-00		J7	960-5007-00
			- OR -		
Sound	(256K)	965-0008-00		7F	960-5007-00
Sound 1	(512K)	965-0009-00		6F	960-7001-02
Sound 2	(512K)	965-0010-00		4F	960-7001-02
Secret Service					
CPU	(256K)	965-0011-00	A4-6	B5	960-5007-00
CPU	(256K)	965-0012-00	A4-6	C5	960-5007-00
Voice 1	(512K)	965-0014-00		6F	960-7001-02
Voice 2	(512K)	965-0015-00		4F	960-7001-02
Sound	(256K)	965-0013-00		7F	960-5007-00
Torpedo Alley					
CPU	(256K)	965-0016-00	A2-1	B5	960-5007-00
CPU	(256K)	965-0017-00	A2-1	C5	960-5007-00
Voice 1	(512K)	965-0019-00		6F	960-7001-02
Voice 2	(512K)	965-0020-00		4F	960-7001-02
Sound	(256K)	965-0018-00		7F	960-5007-00
Time Machine					
CPU	(128K)	965-0021-00	A2-4	B5	960-5006-00
CPU	(256K)	965-0022-00	A2-4	C5	960-5007-00
Voice 1	(512K)	965-0024-00		6F	960-7001-02
Voice 2	(512K)	965-0025-00		4F	960-7001-02
Sound	(256K)	965-0023-00		7F	960-5007-00
Playboy 35th Anniversary					
CPU	(256K)	965-0046-00	A2-4	B5	960-5007-00
CPU	(256K)	965-0047-00	A2-4	C5	960-5007-00
Voice 1	(512K)	965-0049-00		6F	960-7001-02
Voice 2	(512K)	965-0050-00		4F	960-7001-02
Sound	(256K)	965-0048-00		7F	960-5007-00
ABC Monday Night Football					
CPU	(128K)	965-0031-00	A2-7	B5	960-5006-00
CPU	(256K)	965-0032-00	A2-7	C5	960-5007-00
Voice 1	(512K)	965-0034-00		6F	960-7001-02
Voice 2	(512K)	965-0035-00		4F	960-7001-02
Sound	(256K)	965-0033-00		7F	960-5007-00
Robocop					
CPU	(256K)	965-0036-00	A3-4	B5	960-5007-00
CPU	(256K)	965-0037-00	A3-4	C5	960-5007-00
Voice 1	(512K)	965-0039-00		6F	960-7001-02
Voice 2	(512K)	965-0040-00		4F	960-7001-02
Sound	(256K)	965-0038-00		7F	960-5007-00
Phantom of the Opera					
CPU	(128K)	965-0026-00	A3-2	B5	960-5006-00
CPU	(256K)	965-0027-00	A3-2	C5	960-5007-00
Voice 1	(512K)	965-0029-00		6F	960-7001-02
Voice 2	(512K)	965-0030-00		4F	960-7001-02
Sound	(256K)	965-0028-00		7F	960-5007-00
Back to the Future					
CPU	(256K)	965-0041-00	A2-0	B5	960-5007-00
CPU	(256K)	965-0042-00	A2-0	C5	960-5007-00
Voice 1	(512K)	965-0044-00		6F	960-7001-02
Voice 2	(512K)	965-0045-00		4F	960-7001-02
Sound	(256K)	965-0043-00		7F	960-5007-00
The Simpsons					
CPU	(128K)	965-0051-00	A2-7	B5	960-5006-00
CPU	(256K)	965-0052-00	A2-7	C5	960-5007-00
Voice 1	(512K)	965-0054-00		6F	960-7001-02
Voice 2	(512K)	965-0055-00		4F	960-7001-02
Sound	(256K)	965-0053-00		7F	960-5007-00
Checkpoint					
CPU	(128K)	965-0056-00	A1-7	B5	960-5006-00
CPU	(256K)	965-0134-00	A1-7	C5	960-5007-00
Voice 1	(1M)	965-0057-00		F7	960-5009-00
Voice 2	(1M)	965-0058-00		F5	960-5009-00
Sound	(256K)	965-0059-00		F4	960-5007-00
Display	(512K)	965-0060-00	CP80	U8	960-7001-02
Teenage Mutant Ninja Turtles					
CPU	(128K)	965-0061-00	A1.04	B5	960-5006-00
CPU	(256K)	965-0062-00	A1.04	C5	960-5007-00
Voice 1	(1M)	965-0063-00		F5/6	960-5009-00
Voice 2	(1M)	965-0064-00		F4/5	960-5009-00
Sound	(256K)	965-0065-00		F7	960-5007-00
Display	(512K)	965-0066-00	A1.04	U8	960-7001-02
Batman					
CPU	(128K)	965-0067-00	A1.06	B5	960-5006-00
CPU	(256K)	965-0135-00	A1.06	C5	960-5007-00
Voice 1	(2M)	965-0068-00		U17	960-5010-00
Voice 2	(1M)	965-0069-00		U21	960-5009-00
Sound	(256K)	965-0070-00		U7	960-5007-00
Display	(1M)	965-0071-00	A1.06	U8	960-5009-00
Star Trek 25th Anniversary					
CPU	(512K)	965-0072-00	A2.01	C5	960-7001-02
Voice 1	(2M)	965-0073-00		U17	960-5010-00
Voice 2	(2M)	965-0074-00		U21	960-5010-00
Sound	(256K)	965-0075-00		U7	960-5007-00
Display	(1M)	965-0076-00	A1.09	U8	960-5009-00
Hook					
CPU	(512K)	965-0077-00	A4.08	C5	960-7001-02
Voice 1	(2M)	965-0078-00		U17	960-5010-00
Voice 2	(2M)	965-0079-00		U21	960-5010-00
Sound	(256K)	965-0080-00		U7	960-5007-00
Display	(1M)	965-0081-00	A4.01	U8	960-5009-00
Lethal Weapon 3					
CPU	(512K)	965-0082-00	A2.08	C5	960-7001-02
Voice 1	(2M)	965-0083-00		U17	960-5010-00
Voice 2	(2M)	965-0084-00		U21	960-5010-00
Sound	(256K)	965-0085-00		U7	960-5007-00
Display	(2M)	965-0086-00	A2.06	ROM 0	960-5010-00
Display	(2M)	965-0087-00	A2.06	ROM 1	960-5010-00
	(Used on Display PCB 520-5055-00)				
			-OR-		
Display	(4M)	965-0087-04	A2.06	ROM 0	960-5015-00
	(Used on Display PCB 520-5055-01)				
Star Wars					
CPU	(512K)	965-0119-00	A1.03	C5	960-7001-02
Voice 0	(4M)	965-0132-00		U17	960-5015-00
Voice 1	(2M)	965-0133-00		U21	960-5010-00
Sound	(256K)	965-0131-00		U7	960-5007-00
Display	(2M)	965-0120-00	A1.04	ROM 0	960-5010-00
Display	(2M)	965-0121-00	A1.04	ROM 1	960-5010-00
	(Used on Display PCB 520-5055-00)				
			-OR-		
Display	(4M)	965-0122-00	A1.05	ROM 0	960-5015-00
	(Used on Display PCB 520-5055-01)				
Rocky & Bullwinkle & Friends					
CPU	(512K)	965-0138-00	A1.30	C5	960-7001-02
Voice 0	(4M)	965-0139-00		U17	960-5015-00
Voice 1	(2M)	965-0140-00		U21	960-5010-00
Sound	(256K)	965-0141-00		U7	960-5007-00
Display	(4M)	965-0142-00	A1.30	ROM 0	960-5015-00
Jurassic Park					
CPU	(512K)	965-0143-00	A5.13	C5	960-7001-02
Voice 0	(4M)	965-0144-00		U17	960-5015-00
Voice 1	(2M)	965-0145-00		U21	960-5010-00
Sound	(256K)	965-0146-00		U7	960-5007-00
Display	(4M)	965-0147-00	A5.10	ROM 0	960-5015-00
Last Action Hero					
CPU	(512K)	965-0148-00	A1.12	C5	960-7001-02
Voice 0	(4M)	965-0149-00		U17	960-5015-00
Voice 1	(2M)	965-0150-00		U21	960-5010-00
Sound	(256K)	965-0151-00		U7	960-5007-00
Display	(4M)	965-0152-00	A1.06	ROM 0	960-5015-00
Tales from the Crypt					
CPU	(512K)	965-0157-00	A3.03	C5	960-7001-02
Voice 0	(4M)	965-0158-00		U17	960-5015-00
Voice 1	(2M)	965-0159-00		U21	960-5010-00
Sound	(256K)	965-0160-00		U7	960-5007-00
Display	(4M)	965-0161-00	A3.01	ROM 0	960-5015-00
The Who's Tommy					
CPU	(512K)	965-0162-00	A4.00	C5	960-7001-02
Voice 1	(4M)	965-0165-00		U17	960-5015-00
Voice 2	(4M)	965-0166-00		U21	960-5015-00
Voice 3	(4M)	965-0167-00		U36	960-5015-00
Voice 4	(4M)	965-0168-00		U37	960-5015-00
Sound	(512K)	965-0164-00		U7	960-7001-02
Display	(4M)	965-0163-00	A4.00	ROM 0	960-5015-00
WWF Royal Rumble					
CPU	(512K)	965-0169-00	A1.06	C5	960-7001-02
Voice 1	(4M)	965-0172-00		U17	960-5015-00
Voice 2	(4M)	965-0173-00		U21	960-5015-00
Voice 3	(4M)	965-0174-00		U36	960-5015-00
Sound	(512K)	965-0171-00		U7	960-7001-02
Display	(4M)	965-0170-00	A1.02	ROM 0	960-5015-00
Guns N' Roses					
CPU	(512K)	965-0175-00	A3.00	C5	960-7001-02
Voice 1	(4M)	965-0178-00		U17	960-5015-00
Voice 2	(4M)	965-0179-00		U21	960-5015-00
Voice 3	(4M)	965-0180-00		U36	960-5015-00
Voice 4	(4M)	965-0181-00		U37	960-5015-00
Sound	(512K)	965-0177-00		U7	960-7001-02
Display	(4M)	965-0176-00	A3.00	ROM 0	960-5015-00
Maverick *					
CPU	(512K)	965-0182-00	A4.04	C5	960-7001-02
Voice 1	(4M)	965-0186-00		U17	960-5015-00
Voice 2	(4M)	965-0187-00		U21	960-5015-00
Voice 3	(4M)	965-0187-01		U36	960-5015-00
Sound	(512K)	965-0185-00		U7	960-7001-02
Display*	(4M)	965-0183-00	A4.01	ROM 0	960-5015-00
Display*	(4M)	965-0184-00	A4.01	ROM 3	960-5015-00
Mary Shelley's Frankenstein *					
CPU	(512K)	965-0188-00	A1.03	C5	960-7001-02
Voice 1	(4M)	965-0192-00		U17	960-5015-00
Voice 2	(4M)	965-0193-00		U21	960-5015-00
Voice 3	(4M)	965-0194-00		U36	960-5015-00
Sound	(512K)	965-0191-00		U7	960-7001-02
Display*	(4M)	965-0189-00	A1.03	ROM 0	960-5015-00
Display*	(4M)	965-0190-00	A1.03	ROM 3	960-5015-00
Baywatch *	(CPU Board 520-5003-04)				
CPU	(512K)	965-0195-00	A4.00	C5	960-7001-02
Voice 1	(4M)	965-0196-00		U17	960-5015-00
Voice 2	(4M)	965-0197-00		U21	960-5015-00
Sound	(512K)	965-0199-00		U7	960-7001-02
Display*	(4M)	965-0200-00	A4.00	ROM 0	960-5015-00
Display*	(4M)	965-0201-00	A4.00	ROM 3	960-5015-00
Batman Forever *	(CPU Board 520-5003-04)				
CPU	(512K)	965-0202-00	A3.02	C5	960-7001-02
Voice 1	(4M)	965-0203-00		U17	960-5015-00
Voice 2	(4M)	965-0204-00		U21	960-5015-00
Sound	(512K)	965-0205-00		U7	960-7001-02
Display*	(4M)	965-0206-00	A3.00	ROM 0	960-5015-00
Display*	(4M)	965-0207-00	A3.00	ROM 3	960-5015-00

* ***Note:*** *Display* ***EPROMS (4M)*** *for* ***Maverick*** *thru* ***Batman Forever*** *require an access time of* ***120 Nsec*** *or faster.*

APPENDIX B

Semi-Conductors / Integrated Circuits (I.C.) / Relays Cross-Reference Table

Table №	Type	Source Number	STERN® PINBALL	N T E®	E C G®	Radio Shack®	R C A®
	RECTIFICATION, BLOCKING, DAMPENING DIODES AND/OR LIGHT EMITTING DIODES (LEDs)						
1	Diode	1N4001	112-5001-00	NTE552	ECG552	- — - — -	SK9000
	Diode	1N4004	112-5003-00	NTE116	ECG116	276-1103	SK3312
	Diode	1N5401	112-0056-00	NTE5801	ECG5801	276-1143	SK9004
	Diode	1N5404	112-5004-00	NTE5804	ECG5804	276-1144	SK9007
	Diode	T6A10L	112-5006-01	NTE5812	ECG5812	- — - — -	- — - — -
	Diode	FR302	112-5009-00	NTE588	ECG588	- — - — -	SK5014
	Diode, Signal	1N914	112-5014-00	- — - — -	- — - — -	- — - — -	- — - — -
	LED	**MT5000UR** or **TLRH180P** (T1-3/4 GaAlAs)	165-5052-00 *(old SPI Part №: 165-5100-00)*	- — - — -	- — - — -	276-066B	- — - — -
	ZENER DIODES						
2	Diode	1N4742A 12v	112-0061-00	NTE142A	ECG142A	276-563	SK12V
	Diode	1N4760B 68v	112-0062-00B	NTE5092A	ECG5092A	- — - — -	SK68V
	Diode	1N4764A 100v	112-0049-00A	NTE5096A	ECG5096A	- — - — -	SK100V
	Diode	1N5228 3.9v	112-0053-00	NTE5007A	ECG5007A	- — - — -	SK3A9
	Diode	1N5234B 6.2v	112-0047-00B	NTE5013A	ECG5013A	276-561	SK6A2
	Diode	1N5379 110v	112-0072-00	NTE5157	ECG5157	- — - — -	SK110X
	Diode	1N6267A 6.8v	112-5011-00	NTE4902	ECG4902	- — - — -	- — - — -
	Diode	1N4752A 33v	112-5010-00A	NTE147A	ECG147A	- — - — -	SK33V
	Diode	1N4736 6.8v 1w	112-5007-00	NTE5071A	ECG5071A	- — - — -	- — - — -
	TRANSISTORS - TYPE FET, NPN, PNP AND/OR SCR						
3	FET Trans.	STP20N10L	110-0106-00	NTE2987	ECG2987	- — - — -	- — - — -
	FET Trans.	STP19N06L	110-0088-00	NTE2985	ECG2985	- — - — -	- — - — -
	FET Trans.	VN02N	110-0089-00	- — - — -	- — - — -	- — - — -	- — - — -
	NPN Trans.	2N4401	110-0073-00	NTE85	ECG85	276-2009	SK3124A
	NPN Trans.	2N6427	110-0070-00	NTE48	ECG48	- — - — -	SK4906
	NPN Trans.	MJE340	110-0071-00	NTE157	ECG157	- — - — -	SK3747
	NPN Trans.	MPSA42	110-0082-00	NTE287	ECG287	- — - — -	SK3232
	NPN Trans.	2N3904	110-0069-00	NTE123AP	ECG123AP	276-2009	- — - — -
	NPN Trans.	TIP122	110-0067-00	NTE261	ECG261	276-2068	SK3896
	NPN Trans.	MJE15030	110-0101-00	NTE375	ECG375	- — - — -	SK9118
	PNP Trans.	2N5401	110-0078-00	NTE288	ECG288	- — - — -	SK3434
	PNP Trans.	MJE15031	110-0103-00	NTE292	ECG292	- — - — -	SK3441
	PNP Trans.	MJE350	110-0072-00	NTE374	ECG374	- — - — -	SK9042
	PNP Trans.	MPSA92	110-0100-00	NTE288	ECG278	- — - — -	SK3434
	PNP Trans.	TIP42	110-0068-00	NTE332	ECG332	- — - — -	SK9236
	PNP Trans.	TIP32C	110-0081-00	NTE292	ECG292	- — - — -	SK3441
	PNP Trans.	TIP36C	110-0077-00	NTE393	ECG393	- — - — -	SK3961
	SCR Trans.	2N5060	110-0074-00	NTE5400	ECG5400	276-1067	SK3950
	SCR Trans.	SCR2800B	110-0083-00	NTE5461-8	ECG5461-8	- — - — -	- — - — -
	BRIDGE RECTIFIERS (BR)			**Comments:**			
4	BR (Present)	DB3501 or CM3501	112-5000-00	For White Star I/O Bds., BR = 35 Amp @ 100v P.I.V.			
	RELAYS			**Comments:**			
5	Relay	FRL-264 D024/02CK	190-5002-00	For PPB, Power Supply, & White Star I/O Boards, Relay = 24v DC 10 Amp DPDT			
	Relay	FRL-264 D006/04CV	190-5001-00	For CPU Boards, Relay = 6v DC 5 Amp 4 Pole DT			

APPENDIX C

Production Start Date, Manual Part Nº, ROM Size & Positions and Jumper W6 Installed Note‡ (White Star Board System & S.A.M. System Only*)

	Game Name White Star Bd. System™	Production Start Date and Manual Part Nr.	CPU/Sound Board **Sound U7 512K** CPU/Sound Board **Game U210 1MB** CPU/Sound Board **Voice ROMS:** U17	U21	U36	U37	Jumper Installed (‡ see Note)
*** Note:**	*For complete Appendix Information for Games **Laser War** through **Batman Forever**, see any Service Game Manual between **Apollo 13** through **Ripley's Believe It or Not!** or on-line at our website www.sternpinball.com/parts.htm; also available on CD-R, 970-2003-00 (**The Simpsons™ Pinball Party**, **T3®** and **The Lord of the Rings™**).*						
29	Apollo 13 (A13)	NOV 95 780-5044-00	4MB	4MB	4MB	Not Used	n / a
30	Golden Eye	FEB 96 780-5042-00	4MB	4MB	Not Used	Not Used	n / a
31	Twister	APR 96 780-5041-00	4MB	4MB	Not Used	Not Used	n / a
32	ID4: Independence Day	JUL 96 780-5045-00	4MB	4MB	Not Used	Not Used	n / a
33	Space Jam	OCT 96 780-5043-00	4MB	4MB	4MB	Not Used	n / a
34	The Star Wars Trilogy - Sp. Ed.	FEB 97 780-5056-00	4MB	4MB	Not Used	Not Used	n / a
35	The Lost World: Jurassic Park	JUN 97 780-5053-00	4MB	4MB	Not Used	Not Used	n / a
36	The X-Files	AUG 97 780-5046-00	4MB	4MB	Not Used	Not Used	n / a
37	Starship Troopers	NOV 97 780-5059-00	4MB	4MB	4MB	Not Used	n / a
38	Viper Night Drivin'	FEB 98 780-5035-00	4MB	4MB	4MB	4MB	n / a
39	Lost In Space	JUN 98 780-5060-00	4MB	4MB	4MB	4MB	n / a
40	Godzilla	SEP 98 780-5040-00	4MB	4MB	4MB	4MB	n / a
41	South Park	JAN 99 780-5071-00	8MB	8MB	8MB	8MB	W6
42 a	Harley-Davidson®	AUG 99 780-5067-01	8MB	8MB	8MB	8MB	W6
42 b	Harley-Davidson®2nd Ed.	SEP 02 780-5067-10	8MB	8MB	8MB	8MB	W6
42 c	Harley-Davidson® 3rd Ed.	OCT 04 780-5087-00	8MB	8MB	8MB	8MB	W6
43 a	Striker Xtreme	MAR 00 780-5068-01	8MB	8MB	8MB	8MB	W6
43 b	NFL	OCT 00 780-5073-00	8MB	8MB	8MB	8MB	W6
44	Sharkey's Shootout	JUL/OCT 00 780-5072-01	8MB	8MB	8MB	Not Used	W6
45	High Roller Casino	JAN 01 780-5065-00	8MB	8MB	8MB	8MB	W6
46	Austin Powers™	MAY 01 780-5074-00	8MB	8MB	8MB	8MB	W6
47	MONOPOLY®	SEP 01 780-5075-00	8MB	8MB	8MB	Not Used	W6
48	Playboy	FEB 02 780-5076-00	8MB	8MB	8MB	8MB	W6
49	RollerCoaster Tycoon™	AUG 02 780-5078-00	8MB	8MB	8MB	Not Used	W6
50	The Simpsons™ Pinball Party	JAN 03 780-5077-00	8MB	8MB	8MB	8MB	W6
51	T3®: Rise of the Machines™	MAY 03 780-5079-00	8MB	8MB	8MB	8MB	W6
52	The Lord of the Rings™	NOV 03 780-5080-00	8MB	8MB	8MB	8MB	
53	Ripley's Believe It or Not!®	APR 04 780-5081-00	8MB	8MB	8MB	8MB	

‡ *Additional Information for **Installed** Jumper (above games 41-51):*

- *Installed **W6** so 8MB ROMS can be utilized. See the **CPU/Sound Board Schematic** (Sheet 2 of 3, Address Location 3E) in the games' Service Game Manual. Games 52 - 57 CPU/Sound Board differ than <51 (See Appendix D).*

See **Apdx. A** for more detailed information on **Pinball Game Firmware** *(ROM Name, Size, Part Numbers, USA Version & Checksum and Board Locations).*

	Game Name White Star Board System™	Production Start Date and Manual Part Nr.	CPU/Sound Board **Sound U7 512K** CPU/Sound Board **Game U210 1MB** CPU/Sound Board **Voice ROMS:** U17	U21	U36	U37
54	Elvis®	AUG 04 780-5084-00	8MB	8MB	8MB	8MB
55	The Sopranos℠	FEB 05 780-5085-00	8MB	8MB	8MB	8MB
56	NASCAR®	JUL 05 780-5086-00	8MB	8MB	8MB	8MB
57	Grand Prix	SEP 05 780-5091-00	8MB	8MB	8MB	8MB

See **Apdx. A** for more detailed information on **Pinball Game Firmware** *(ROM Name, Size, Part Numbers, USA Version & Checksum and Board Locations).*

	Game Name S.A.M. System	Production Start Date and Manual Part Nr.	S.A.M. System CPU/Sound Board Boot EPROM **U9** 965-BOOT-SAM *(Programmed)*			
58	World Poker Tour™ (WPT)	JUN 06 780-5088-00	8MB	B-02 V2.1+	chksum $F625	LOC: U9
59	The Simpsons™ Kooky Carnival	APR 06 780-5090-00	8MB	B-02 V2.1+	chksum $F625	LOC: U9
60	©Disney's Pirates of the Caribbean	AUG 06 780-5092-00	8MB	B-02 V2.1+	chksum $F625	LOC: U9
61	Famil Guy™	DEC 06 780-5093-00	8MB	B-02 V2.1+	chksum $F625	LOC: U9
62	Spider-Man™	MAY 07 780-5094-00	8MB	B-02 V2.1+	chksum $F625	LOC: U9

Games 58 – current, S.A.M. System : CPU/Sound & I/O Power Driver PCBs differ than White Star *(previous Games 29 – 57)*; Disp. Controller Not Required.

APPENDIX D

Board Type (White Star Board System* Only) Table

Game Name	Flipper	I/O Power Driver	CPU/Sound Stereo	Disp. Power Supply	Dot Matrix Display	Display Controller	OPTO Transmitter	OPTO Receiver	OPTO Application
Apollo 13	520-5080-00 2-Flipper	520-5137-00	520-5136-00	520-5138-00	520-5052-00 128 X 32 Dots	520-5055-01	520-5124-00 Single OPTO	520-5125-00 Single OPTO	5-Ball Trough over Up-Kicker
	Miscellaneous PC Boards:	Light Boards 520-5130-01, -04 & -05 Magnet Interface, 7-Segment Display & Light Bd. 520-5130-06 Magnet Driver Board 520-5130-02 Switch Membrane Board 520-5130-03				Relay Board 520-5010-00			
Golden Eye	520-5080-00 2-Flipper	520-5137-00	520-5136-00	520-5138-00	520-5052-00 128 X 32 Dots	520-5055-01	520-5124-00 Single OPTO	520-5125-00 Single OPTO	5-Ball Trough over Up-Kicker
	Miscellaneous PC Boards:	Light Boards 520-5128-05 through -08		Mag. Processor X2 Driver Bd. 520-5143-00		Relay Board 520-5010-00			

GAMES HEREON NO LONGER REQUIRE THE FLIPPER BOARD WITH THE WHITE STAR BOARD SYSTEM™

Game Name	I/O Power Driver	CPU/Sound Mono	Disp. Power Supply	Dot Matrix Display	Display Controller	OPTO Transmitter	OPTO Receiver	OPTO Application	Misc OPTO & App.
Twister	520-5137-01	520-5136-10	520-5138-00	520-5052-00 128 X 32 Dots	520-5055-01	520-5124-00 Single OPTO	520-5125-00 Single OPTO	5-Ball Trough over Up-Kicker	
	Miscellaneous PC Boards:	Light Boards 520-5145-01 through -07		Mag. Drv. Bd. 520-5143-00	Relay Board 520-5010-00				
Independence Day (ID4)	520-5137-01	520-5136-10	520-5138-00	520-5052-00 128 X 32 Dots	520-5055-01	520-5124-00 Single OPTO	520-5125-00 Single OPTO	4-Ball Trough over Up-Kicker	
	Miscellaneous PC Boards:	Light Boards 520-5149-01 through -10		Servo Mtr. Bd. 520-5152-00		520-5082-00 Long Hop OPTO	520-5083-00 Long Hop OPTO	Alien Head Enter	
Space Jam	520-5137-01	520-5136-10	520-5138-00	520-5052-00 128 X 32 Dots	520-5055-01	520-5124-00 Single OPTO	520-5125-00 Single OPTO	5-Ball Trough over Up-Kicker	
	Miscellaneous PC Boards:	2X 7-Segment Display Board 520-5153-00							
The Star Wars Trilolgy - Special Ed.	520-5137-01	520-5136-10	520-5138-00	520-5052-00 128 X 32 Dots	520-5055-01	520-5124-00 Single OPTO	520-5125-00 Single OPTO	4-Ball Trough over Up-Kicker	
	Miscellaneous PC Boards:	Relay Board 520-5010-00							
The Lost World: J.P.	520-5137-01	520-5136-10	520-5138-00	520-5052-00 128 X 32 Dots	520-5055-01	520-5124-00 Single OPTO	520-5125-00 Single OPTO	4-Ball Trough over Up-Kicker	520-5162-00 2-Pos. Motor Sensor on Snagger Motor
	MiscellaneousPC Boards:	DC Relay Bd. 520-5066-00	Shaker Mtr. Bd. 520-5065-00						
The X-Files	520-5137-01	520-5136-10	520-5138-00	520-5052-00 128 X 32 Dots	520-5055-01	520-5124-00 Single OPTO	520-5125-00 Single OPTO	4-Ball Trough over Up-Kicker	520-5155-00 3-Pos. Motor Sensor on File Cab. Motor
	Miscellaneous PC Boards:					520-5082-00 Long Hop OPTO	520-5083-00 Long Hop OPTO	File Cabinet Enter	
Starship Troopers	520-5137-01	520-5136-15	520-5138-00	520-5052-00 128 X 32 Dots	520-5055-02	520-5124-00 Single OPTO	520-5125-00 Single OPTO	4-Ball Trough over Up-Kicker	
	Miscellaneous PC Boards:	4X 7-Segment Display Board 520-5166-00				520-5082-00 Long Hop OPTO	520-5083-01 Long Hop OPTO	L/R Orbit Lane Enter	
Viper Night Drivin'	520-5137-01	520-5136-16	520-5138-00	520-5052-00 128 X 32 Dots	520-5055-03	520-5124-00 Single OPTO	520-5125-00 Single OPTO	4-Ball Trough over Up-Kicker	
	Miscellaneous PC Boards:	Relay Board 520-5010-00				520-5082-00 Long Hop OPTO	520-5083-01 Long Hop OPTO	Jump Ramp	
Lost In Space	520-5137-01	520-5136-16	520-5138-00	520-5052-00 128 X 32 Dots	520-5055-03	515-0173-00 Dual OPTO	515-0174-00 Dual OPTO	4-Ball Trough over Up-Kicker	
	Miscellaneous PC Boards:	Relay Board 520-5010-00							
Godzilla	520-5137-01	520-5136-16	520-5138-00	520-5052-00 128 X 32 Dots	520-5055-03	515-0173-00 Dual OPTO	515-0174-00 Dual OPTO	4-Ball Trough over Up-Kicker	
	Miscellaneous PC Boards:	Shaker Mtr. Bd. 520-5065-00							
South Park	520-5137-01	520-5136-16	520-5138-00	520-5052-00 128 X 32 Dots	520-5055-03	515-0173-00 Dual OPTO	515-0174-00 Dual OPTO	5-Ball Trough over Up-Kicker	
	Miscellaneous PC Boards:					520-5082-00 Long Hop OPTO	520-5083-01 Long Hop OPTO	Kenny Under Trough Enter	
Harley-Davidson® 1st-3rd* Editions	520-5137-01	520-5136-16 *520-5300-00*	520-5138-00	520-5052-00 128 X 32 Dots	520-5055-03	515-0173-00 Dual OPTO	515-0174-00 Dual OPTO	4-Ball Trough over Up-Kicker	
	Miscellaneous PC Boards:	Relay Board 520-5010-00	Shaker Mtr. Bd. 520-5065-00	Diode Board 520-5146-00		520-5082-00 Long Hop OPTO	520-5083-01 Long Hop OPTO	Motorcycle Enter	
Striker Xtreme (NFL)	520-5137-01	520-5136-16	520-5138-00	520-5052-00 128 X 32 Dots	520-5055-03	515-0173-00 Dual OPTO	515-0174-00 Dual OPTO	4-Ball Trough over Up-Kicker	520-5155-00 3-Pos. Motor Sensor on Goalie Motor
	Miscellaneous PC Boards:	DC Relay Bd. 520-5066-00	Relay Board 520-5010-00	Diode Board 520-5146-00	for UK ONLY> Solenoid Expander Bd. 520-5192-00	520-5082-00 Long Hop OPTO	520-5083-01 Long Hop OPTO	Goalie Under-Trough Enter	
Sharkey's Shootout	520-5137-64	520-5136-64	520-5138-00	520-5052-00 128 X 32 Dots	520-5055-03	515-0173-00 Dual OPTO	515-0174-00 Dual OPTO	4-Ball Trough over Up-Kicker	520-5194-00 4-Pos. Motor Sensor on ?-Ball Motor
	MiscellaneousPC Boards:	Relay Board 520-5010-00	Sol. Exp. Bd. 520-5192-00						
High Roller Casino	520-5137-01	520-5136-16	520-5138-00	520-5052-00 128 X 32 Dots	520-5055-03	515-0173-00 Dual OPTO	515-0174-00 Dual OPTO	4-Ball Trough over Up-Kicker	520-5194-00 4-Pos. Motor Sensor on Roulette Wheel Motor
						520-5082-00 Long Hop OPTO	520-5083-01 Long Hop OPTO	Ball Lock under Roulette	
	Miscellaneous PC Boards:	Dot Display (5X7) in Slot Mach. 520-5197-00			for UK ONLY> Solenoid Expander Bd. 520-5192-00	520-5196-00 3-Pos. OPTO	520-5195-00 3-Pos. OPTO	Up/Dn Ramp in Slot Mach.	
Austin Powers™	520-5137-01	520-5136-16	520-5138-00	520-5052-00 128 X 32 Dots	520-5055-03	515-0173-00 Dual OPTO	515-0174-00 Dual OPTO	4-Ball Trough over Up-Kicker	520-5212-00 Pulse-Stretcher OPTO on Spini-Me
	MiscellaneousPC Boards:	Relay Bd. (X3) 520-5010-00			for UK ONLY> Solenoid Expander Bd. 520-5192-00	520-5082-00 Long Hop OPTO	520-5083-01 Long Hop OPTO	Time Machine Ramp	
MONOPOLY®	520-5137-01	520-5136-16	520-5138-00	520-5052-00 128 X 32 Dots	520-5055-03	515-0173-00 Dual OPTO	515-0174-00 Dual OPTO	4-Ball Trough over Up-Kicker	
	MiscellaneousPC Boards:	DC Relay Bd. 520-5066-00	Mini-Dot Display (3 by 5X7) 520-5197-00 (Electric C° Sign)		for UK ONLY> Solenoid Expander Bd. 520-5192-00	520-5218-00 4-Pos. OPTO	520-5210-00 4-Pos. OPTO	Bank Door	

Table continued on the next page.

APPENDIX D

Board Type (White Star Board System* & S.A.M. System** Only) Table

Game Name	I/O Power Driver	CPU/Sound (old & new)	Disp. Power Supply	Dot Matrix Display	Display Controller	OPTO Transmitter	OPTO Receiver	OPTO Application	Misc OPTO & App.
Playboy	520-5137-01	520-5136-16	520-5138-00	520-5052-00 128 X 32 Dots	520-5055-03	515-0173-00 Dual OPTO	515-0174-00 Dual OPTO	4-Ball Trough over Up-Kicker	
	Miscellaneous PC Boards:	DC Relay Bd. 520-5066-00	Relay Bd. 520-5010-00		for UK ONLY> Solenoid Expander Bd. 520-5192-00				
RollerCoaster Tycoon™	520-5137-01	520-5136-16	520-5138-00	520-5052-00 128 X 32 Dots	520-5055-03	515-0173-00 Dual OPTO	515-0174-00 Dual OPTO	4-Ball Trough over Up-Kicker	520-5222-00 1-Position Switch Detect on Wheel Spin
	Miscellaneous PC Boards:	DC Relay Bd. 520-5066-00	Mini-Dot Display (3 by 5X7) 520-5221-00 (Ramp Enter Sign)		for UK ONLY> Solenoid Expander Bd. 520-5192-00	520-5082-00 Long Hop OPTO	520-5083-01 Long Hop OPTO	Behind 1-Bank Drop Target	
The Simpsons™ Pinball Party	520-5137-01	520-5136-16	520-5138-00	520-5052-00 128 X 32 Dots	520-5055-03	515-0173-00 Dual OPTO	515-0174-00 Dual OPTO	4-Ball Trough over Up-Kicker	
	Miscellaneous PC Boards:	LED Bd. 520-5219-00	Color Dot Display (4 by 5X7) 520-5225-00 (TV Set)		for UK ONLY ◀◀◀ Aux. Driver Bd. 520-5068-01				
Terminator® 3: Rise of the Machines™	520-5137-01	**520-5136-16**	520-5138-00	520-5052-00 128 X 32 Dots	520-5055-03	515-0173-00 Dual OPTO	515-0174-00 Dual OPTO	4-Ball Trough over Up-Kicker	
	Miscellaneous PC Boards:				for UK ONLY ◀◀◀ Aux. Driver Bd. 520-5068-01	515-7307-00 Single OPTO	515-7308-00 Single OPTO	TXCannon Trough	
The Lord of the Rings™	520-5137-01	***New* 520-5300-00**	520-5138-00	520-5052-00 128 X 32 Dots	520-5055-03	515-0173-00 Dual OPTO	515-0174-00 Dual OPTO	4-Ball Trough over Up-Kicker	500-6746-00 (White Trans.) 500-6747-00 (Black Rec.)
	Miscellaneous PC Boards:	19-LED PCB 520-5242-00	OPTO Transmitter / Receiver Amplifier PCB 520-5239-00		for UK ONLY ◀◀◀ Aux. Driver Bd. 520-5068-01	515-7307-00 Single OPTO	515-7308-00 Single OPTO	Orthanc Tower Trough	
Ripley's Believe It or Not!®	520-5137-01	520-5300-00	520-5138-00	520-5052-00 128 X 32 Dots	520-5055-03	515-0173-00 Dual OPTO	515-0174-00 Dual OPTO	4-Ball Trough over Up-Kicker	500-6775-00 OPTO Trnscvr
	Miscellaneous PC Boards:	520-5236-00 X3 Dot Display	OPTO Transmitter / Receiver Amplifier PCB 520-5239-01		for UK ONLY ◀◀◀ Aux. Driver Bd. 520-5068-01	520-5234-00 3-Pos. OPTO	520-5234-00 3-Pos. OPTO	Vari-Target	520-5235-03 X3 Aux. Drvr
Elvis®	520-5137-01	520-5300-00	520-5138-00	520-5052-00 128 X 32 Dots	520-5055-03	515-0173-00 Dual OPTO	515-0174-00 Dual OPTO	4-Ball Trough over Up-Kicker	
	Miscellaneous PC Boards:				for UK ONLY ◀◀◀ Aux. Driver Bd. 520-5068-01				
The Sopranos℠	520-5137-01	520-5300-00	520-5138-00	520-5052-00 128 X 32 Dots	520-5055-03	515-0173-00 Dual OPTO	515-0174-00 Dual OPTO	4-Ball Trough over Up-Kicker	
	Miscellaneous PC Boards:				for UK ONLY ◀◀◀ Aux. Driver Bd. 520-5068-01				
NASCAR® and [NDSE]	520-5137-01	520-5300-00	520-5138-00	520-5052-00 128 X 32 Dots	520-5055-03	515-0173-00 Dual OPTO	515-0174-00 Dual OPTO	4-Ball Trough over Up-Kicker	500-6775-00 OPTO Trans. (Qty. 16) Switch Detect.
	Miscellaneous PC Boards:	520-5235-03 X3 Aux. Drvr	OPTO Transmitter / Receiver Amplifier PCB 520-5239-01		for UK ONLY ◀◀◀ Aux. Driver Bd. 520-5068-01				
Grand Prix	520-5137-01	520-5300-00	520-5138-00	520-5052-00 128 X 32 Dots	520-5055-03	515-0173-00 Dual OPTO	515-0174-00 Dual OPTO	4-Ball Trough over Up-Kicker	500-6775-00 OPTO Trans. (Qty. 16) Switch Detect.
	Miscellaneous PC Boards:	520-5235-03 X3 Aux. Drvr	OPTO Transmitter / Receiver Amplifier PCB 520-5239-01		for UK ONLY ◀◀◀ Aux. Driver Bd. 520-5068-01				

Game Name	I/O Power Driver**	CPU / Sound**	Disp. Power Supply	Dot Matrix Display	Dual OPTO Transmitter	Dual OPTO Receiver	Dual OPTO Transceiver	OPTO Transceiver Miscellaneous
World Poker Tour™ (WPT)	**520-5249-00** Backbox	**520-5246-00** Backbox	520-5138-00 Backbox	520-5052-00 128 X 32 Dots	515-0173-00 4-Ball Trough	515-0174-00 4-Ball Trough	500-6775-00 4 Switch Pairs (Qty. 8)	520-5251-00 'U' 1/per PCB Jail Bars Up Ace/Hole Mech
	Miscellaneous **PCBs :**	520-5254-00 **50V Step-Up** Drv	520-5250-14 **14LED 5X7 Disp.**	520-5239-01 **OPTO** Amplifier	520-5247-00 Ace/Hole Mech	520-5248-00 Ace/Hole Mech		520-5252-04 'U' 4/per PCB Drop Targets 4- & 8- Banks
The Simpsons™ Kooky Carnival	**520-5249-00** Back Door	**520-5246-00** Back Door	520-5138-00 Cabinet Rear	520-5052-00 128 X 32 Dots			**520-5253-00-ASY** Coin Drop (Qty. 11)	
	Miscellaneous **PCBs :**	515-5742-00 Shaker PCB	500-6700-00 Relay *(incl. Wiring + Conn.)*					
©Disney's Pirates of the Caribbean	**520-5249-00** Backbox	**520-5246-00** Backbox	520-5138-00 Backbox	520-5052-00 128 X 32 Dots	515-0173-00 4-Ball Trough	515-0174-00 4-Ball Trough	500-6775-00 5 Switch Pairs (Qty. 10)	
	Miscellaneous **PCBs :**	520-5239-01 **OPTO Amp. (X3)**	511-5024-03 Relay *(incl. Wiring + Conn.)*					
		520-5238-00 : H-E-A-R-T LED PCB						
Family Guy™	**520-5249-00** Backbox	**520-5246-00** Backbox	520-5138-00 Backbox	520-5052-00 128 X 32 Dots	515-0173-00 4-Ball Trough	515-0174-00 4-Ball Trough	500-6775-00 3 Switch Pairs (Qty. 6)	520-5252-01 'U' 1/per PCB Drop Target 1-Bank
	Miscellaneous **PCBs :**	520-5239-01 **OPTO Amp. (X2)**	520-5261-00 Stepper Motor	511-5042-01 **Trgt. Sensor (X2)**			500-6775-01 1 Switch Pair (Qty. 2)	520-5252-04 'U' 4/per PCB Drop Target 4-Bank
		511-5046-00 : Mini Playfield Lamp PCB						
Spider-Man™	**520-5249-00** Backbox	**520-5246-00** Backbox	520-5138-00 Backbox	520-5052-00 128 X 32 Dots	515-0173-00 4-Ball Trough	515-0174-00 4-Ball Trough	500-6775-00 3 Switch Pairs (Qty. 6)	
	Miscellaneous **PCBs :**	520-5239-01 **OPTO Amp. (X2)**						

APPENDIX D

Board Type Table

Game Name	Flipper	Sound	Power Supply	Display X-Digit
• Laser War	2-Flipper **Board Not Required**	***initial:*** 520-5002-00 ***replaced with:*** 520-5002-02 *520-5002-01 was not used.*	520-5000-00	Master: 520-5004-00 plus: 520-5005-00 (Qty. 2): 7 Digit Alpha/Numeric 520-5006-00 (Qty. 2): 7 Digit Numeric 520-5007-00 (Qty. 1): 4 Digit Numeric
• Secret Service • Torpedo Alley	3-Flipper **Board Not Required**	520-5002-02		520-5014-01 7 Digit Alpha/Numeric Combined
• Time Machine	2-Flipper **Board Not Required**			
• Playboy 35th Anniversary * • ABC Monday Night Football * • *Robocop* • *Phantom of the Opera* • *Back to the Future*	520-5033-00 2-Flipper *(*only for 100 games of Playboy 35th Anniv. & ABC Mon. Night Football)*			520-5030-00 16 Digit Alpha/Numeric Combined
• The Simpsons		520-5002-**03**		

Game Name	Flipper	Sound	Power Supply	Dot Matrix Display	Display Controller	OPTO Transmitter	OPTO Receiver	OPTO Apllication
• Checkpoint • Teenage Mutant Ninja Turtles	520-5033-00 2-Flipper	520-5002-03	520-5047-00	520-5042-00 128 X 16				
• Batman • Star Trek 25th Anniv. • Hook		520-5050-01						
• Lethal Weapon 3			520-5047-01	520-5052-00 128 X 32	520-5055-00			
• Star Wars • Rocky & Bull-winkle & Friends		520-5050-02						
• Jurassic Park	520-5076-00 3-Flipper		520-5047-02					
• Last Action Hero	520-5070-00 2-Flipper	520-5050-03						
• Tales from the Crypt	520-5076-00 3-Flipper				520-5055-01			
• The Who's Tommy		520-5077-00						
• WWF Royal Rumble	**520-5070 / 5080 -00** 4-Flipper (2X2)							
• Guns N' Roses	520-5076-00 3-Flipper							
• Maverick		520-5050-03	520-5047-03	520-5075-00 192 X 64	520-5092-01	520-5102-00 Single OPTO	520-5103-00 Single OPTO	Paddle Boat Wheel Enter
• Mary Shelley's Frankenstein	520-5076-00 3-Flipper	520-5077-00						
• Baywatch	**520-5070 / 5080 -00** 4-Flipper (2X2)	520-5126-02				520-5124-00 Single OPTO	520-5125-00 Single OPTO	5-Ball Trough over Up-Kicker
• Batman Forever	520-5076-00 3-Flipper					520-5124-00 Single OPTO	520-5125-00 Single OPTO	4-Ball Trough over Up-Kicker

Miscellaneous Boards (Lamp Boards & Relay Boards) not listed above can be found in each individual game manual.

APPENDIX E

Flipper Coil (White Star Board System* & S.A.M. System** Only) Table

Typical Coil Diode 1N4004 unless noted otherwise (Diode Top = above lugs next to windings; Diode Below (Bottom) = under lugs opposite of windings).

STANDARD COILS (TYPICAL APPLICATIONS)		
Ga.-Turn	**Res (Ω)**	**SPI Part Number and Comments**
20-400	1.0 Ω	090-5021-*use* : **-00** Diode Top
22-500	1.7 Ω	090-5017-*use* : -00 Diode Top
22-600	2.2 Ω	090-5017-*use* : -0B Diode Below // **-0T** Diode Top
23-700	3.1 Ω	090-5022-*use* : -0B Diode Below // **-0T** Diode Top
23-750	3.4 Ω	090-5019-*use* : -00 Diode Top
23-800	3.6 Ω	090-5001-*use* : -0B Diode Below // **-0T** Diode Top // **-NL** No Lugs 11" Leads // **-ND** No Diode
23-840	4.0 Ω	090-5005-*use* : -00 Diode Top
23.5-765	3.6 Ω	090-5037-*use* : -03 Diode Top
24-900	5.0 Ω	090-5002-*use* : -02 Diode Top // **-10** No Lugs 14" Leads
24-940	5.5 Ω	090-5036-*use* : -0B Diode Below // **-0T** Diode Top *use* **090-5051-01** No Lugs 11" Leads
25-1240	9.3 Ω	090-5034-*use* : -00 Diode Below
26-1200	10.3 Ω	090-5044-*use* : -0B Diode Below // **-0T** Diode Top // **-NL** No Lugs 11" Leads // **-ND** No Diode
27-1300	14.2 Ω	090-5003-*use* : -0T Diode Top
27-1400	14.7 Ω	090-5015-*use* : -00 Diode Below
27-1400		**511-5031-00** *Special App.: No Diode / Lugs + Conn.*
27-1500	16.3 Ω	090-5004-*use* : -0B Diode Below // **-0T** Diode Top
29-2000	33.6 Ω	090-5016-*use* : -00 Diode Top
LARGE, MEDIUM & MINI COILS (MAGNET APPLICATIONS)		
20.5-480	2.9 Ω	090-5064-*use* : -02 No Lugs *or* Core; 14" Leads // Large
22-650	4.3 Ω	090-5042-*use* : -00 No Lugs *or* Core; 6" Leads // Large **-01** No Lugs *or* Core; 12" Leads // Large
24-780	8.0 Ω	090-5061-*use* : -00 No Lugs *or* Core; 6" Lds. // Medium
29-1000	15.2 Ω	090-5059-*use* : -00 Lugs + Diode + Magnet Core // Mini
31-1500	52.0 Ω	090-5054-00 : Straight Lugs + Diode + Mag Core // Mini 090-5055-00 : 90° Lugs + Diode + Magnet Core // Mini

LARGE COILS (FLIPPERS & SPECIAL APPLICATIONS)		
Ga.-Turn	**Res (Ω)**	**SPI Part Number and Comments**
21-900	*call* Ω	090-5020-*use* : **-01** 3-Lugs + 1N4004 & 1N5404 Diodes **-10** Diode Top <BROWN><RED>
22-750 / 30-2600	2.6 Ω 92.0 Ω	090-5011-*use* : **-00 DUAL WND COIL** // 3-Lugs Diode x2
22-900	3.45 Ω	090-5020-*use* : -20T Diode Top <YELLOW> // **-20-ND** No Diode
22-1080	4.2 Ω	090-5032-*use* : -0B D. Below // **-0T** D. Top <YEL-GRN> **-NL** No Diode
23-620 / 30-2600	2.4 Ω 75.0 Ω	090-5006-*use* : -00 **DUAL WND COIL** // 3-Lugs Diode x2
23-700 / 30-2600	3.0 Ω 83.5 Ω	090-5013-*use* : -00 **DUAL WOUND COIL** // Diode Top
23-800 / 30-2600	2.4 Ω 90.5 Ω	090-5012-*use* : -00 **DUAL WOUND COIL** // Diode Top
23-900	4.05 Ω	090-5020-*use* : -30 Diode Top <GREEN>
23-1100	5.1 Ω	090-5030-*use* : -0T Diode Top <ORANGE> **-ND** No Diode
23-1200	7.1 Ω	090-5008-*use* : -00 Diode Top <BLACK>
23-1500	4.4 Ω	090-5062-*use* : -00 Diode Top <BLUE>
24-1570	9.5 Ω	090-5025-*use* : -00 Diode Top <BLUE>
25-1400	*call* Ω	090-5067-*use* : -0T Diode Top <RED>
25-1600	*call* Ω	090-5068-*use* : -0T Diode Top <WHITE>
25-1800	13.8 Ω	090-5041-*use* : -0T Diode Top <BLUE-GREEN>
MINI COILS (RESET / TRIP APPLICATIONS)		
27-950	*call* Ω	090-5046-*use* : -01 Diode Top
28-1050	11.5 Ω	090-5046-*use* : -00 Diode Top
27-880	*call* Ω	500-6976-01 No Lugs *or* Diode + 6" Leads & Conn.
31-590	*call* Ω	090-5010-*use* : -00 Diode Top
32-1250	35.0 Ω	**515-6916-01** : *includes Flap & Screw* <YELLOW>
32-1800	50.2 Ω	090-5031-*use* (515-6110-00) : -0B Diode Below // **-0T** Diode Top *use 515-# to include mounting & armature brackets*
33-1590	59.0 Ω	**515-6916-00** : *includes brackets* <WHITE>

Please Note: *Ohm values may vary **+ / – .03** depending on meter calibration.*

Ordering Note: *Coils typically should not come with Coil Sleeves. **IF A SLEEVE EXISTS**, ensure it is the correct sleeve for the application usage. For the correct Coil Sleeve, refer to the Game Assembly Drawing the coil exists on and order separately.*

Flipper Coil (White Star Board System* Only) Table

GAME NAME	Nº of Flippers	FLIPPERS		FLIPPERS no E.O.S. Switch	
		SPI Nº / GAUGE-TURNS / Color		SPI Nº / GAUGE-TURNS / Color	
		LOWER LEFT	LOWER RIGHT	UPPER LEFT	UPPER RIGHT
Apollo 13	2	090-5032-0T **22-1080 -YEL-GRN-**	SAME	Not Used	Not Used
Golden Eye	2	090-5032-0T **22-1080 -YEL-GRN-**	SAME	Not Used	Not Used
Twister	2	090-5020-20T **22-900 -YELLOW-**	090-5032-0T **22-1080 -YEL-GRN-**	Not Used	Not Used
ID4: Independence Day	3	090-5032-0T **22-1080 -YEL-GRN-**	SAME	Not Used	090-5020-30 **23-900 -GREEN-**
Space Jam †	2	090-5032-0T **22-1080 -YEL-GRN-**	090-5020-20T **22-900 -YELLOW-**	Not Used	Not Used
The Star Wars Trilogy - Special Edition †	2	090-5032-0T **22-1080 -YEL-GRN-**	SAME	Not Used	Not Used
The Lost World: Jurassic Park †	2	090-5032-0T **22-1080 -YEL-GRN-**	SAME	Not Used	Not Used
The X-Files †	2	090-5032-0T **22-1080 -YEL-GRN-**	SAME	Not Used	Not Used
Starship Troopers †	3	090-5030-0T **23-1100 -ORANGE-**	SAME	Not Used	090-5032-0T **22-1080 -YEL-GRN-**
Viper Night Drivin' †	2	090-5030-0T **23-1100 -ORANGE-**	SAME	Not Used	Not Used
Lost In Space †	2	090-5030-0T **23-1100 -ORANGE-**	090-5032-0T **22-1080 -YEL-GRN-**	Not Used	Not Used
Godzilla †	2	090-5032-0T **22-1080 -YEL-GRN-**	SAME	Not Used	Not Used
South Park †	2	090-5030-0T **23-1100 -ORANGE-**	SAME	Not Used	Not Used

**** Note:*** *For complete Appendix Information for Games **Laser War** through **Batman Forever**, see any Service Game Manual between **Apollo 13** through **Ripley's Believe It or Not!**; or order CD-R, 970-2003-00 (**The Simpsons™ Pinball Party**, **Terminator® 3** and **The Lord of the Rings™**).*

† Coil Part Numbers ending with a "**T**" signifies the Diode is on the top of the lug *(on the coil-winding side)*;
Coil Part Numbers ending with a "**B**" signifies the Diode is on the bottom of the lugs.

Table continued on the next page.

APPENDIX E

Flipper Coil (White Star Board System* & S.A.M. System** Only) Table

GAME NAME	Nº of Flippers	FLIPPERS w/E.O.S. Switch SPI Nº / GAUGE-TURNS / Color		FLIPPERS no E.O.S. Switch SPI Nº / GAUGE-TURNS / Color	
		LOWER LEFT	LOWER RIGHT	UPPER LEFT	UPPER RIGHT
Harley-Davidson® † *and 1st through 3rd Editions*	2	090-5032-0T **22-1080 -YEL-GRN-**	090-5030-0T **23-1100 -ORANGE-**	Not Used	Not Used
Striker Xtreme (NFL) †	3	090-5032-0T **22-1080 -YEL-GRN-**	090-5030-0T **23-1100 -ORANGE-**	090-5030-0T **23-1100 -ORANGE-**	Not Used
Sharkey's Shootout †	3	090-5030-0T **23-1100 -ORANGE-**	SAME	090-5030-0T **23-1100 -ORANGE-**	Not Used
High Roller Casino †	2	090-5020-20T **22-900 -YELLOW-**	090-5032-0T **22-1080 -YEL-GRN-**	Not Used	Not Used
Austin Powers™ †	2	090-5020-30 **23-900 -GREEN-**	090-5030-0T **23-1100 -ORANGE-**	Not Used	Not Used
MONOPOLY® †	3	090-5032-0T **22-1080 -YEL-GRN-**	SAME	Not Used	090-5062-0T **23-1500 -BLUE-**
Playboy †	2	090-5030-0T **23-1100 -ORANGE-**	SAME	Not Used	Not Used
RollerCoaster Tycoon™ †	4	090-5032-0T **22-1080 -YEL-GRN-**	SAME	090-5067-0T **25-1400 -RED-**	090-5068-0T **25-1600 -WHITE-**
The Simpsons™ Pinball Party †	6** (5 with Flipper Bats)	090-5032-0T **22-1080 -YEL-GRN-**	SAME	Not Used	090-5030-0T **23-1100 -ORANGE-**
		*** The Homer Head Assembly is affixed to an Upr. Rt. Style Flipper (no E.O.S. Switch):*	** 090-5020-20T **22-900 -YELLOW-**	Flippers (Mini-Bats) on 2nd Level Playfield: 090-5041-00T **25-1800 -BLU-GRN-**	090-5025-00 **24-1570 -BLUE-**
Terminator® 3: Rise of the Machines™ †	2	090-5032-0T **22-1080 -YEL-GRN-**	SAME	Not Used	Not Used
The Lord of the Rings™ †	2	090-5020-20T **22-900 -YELLOW-**	SAME	Not Used	Not Used
Ripley's Believe It or Not!® †	3	090-5032-0T **22-1080 -YEL-GRN-**	SAME	Not Used	090-5067-00T **25-1400 -RED-**
Elvis® †	4	090-5020-20T **22-900 -YELLOW-**	SAME	090-5020-30 **23-900 -GREEN-**	SAME
The Sopranos℠ †	2	090-5032-0T **22-1080 -YEL-GRN-**	SAME	Not Used	Not Used
NASCAR® and [NDSE] †	2	090-5030-0T **23-1100 -ORANGE-**	SAME	Not Used	Not Used
Grand Prix †	2	090-5030-0T **23-1100 -ORANGE-**	SAME	Not Used	Not Used

† Coil Part Numbers ending with a "**T**" signifies the Diode is on the top of the lug *(on the coil-winding side)*; Coil Part Numbers ending with a "**B**" signifies the Diode is on the bottom of the lugs.

** S.A.M. System Games **DO NOT REQUIRE DIODES**. If you use a coil from your stock which has a diode, remove it **ONLY FOR** S.A.M. System Games.

World Poker Tour™ (WPT)**	4	090-5032-ND **22-1080 [NO DIODE]**	SAME	090-5030-ND **23-1100 [NO DIODE]**	SAME
©Disney's Pirates of the Caribbean**	2	090-5030-ND **23-1100 [NO DIODE]**	SAME	Not Used	Not Used
Family Guy™ **	3 Norm.	090-5030-ND **23-1100 [NO DIODE]**	SAME	090-5062-ND **23-1500 [NO DIODE]**	Not Used
	2 Mini	090-5046-01-ND **27-950 [NO DIODE]**	SAME		
Spider-Man™ **	3	090-5032-ND **22-1080 [NO DIODE]**	SAME	Not Used	090-5032-ND **22-1080 [NO DIODE]**

APPENDIX E

Generic Coil Cross-Reference Guide † ‡

Flipper Coil Table ‡ ††

GAME NAME	Nº of Flippers	FLIPPERS w/E.O.S. Switch SPI Nº / GAUGE-TURNS / Color		FLIPPERS no E.O.S. Switch SPI Nº / GAUGE-TURNS / Color	
		LOWER LEFT	LOWER RIGHT	UPPER LEFT	UPPER RIGHT
Laser War ‡	2	090-5011-00 **22-750 / 30-2600**	SAME	Not Used	Not Used
Secret Service ‡	3	090-5006-00 **23-620 / 30-2600**	SAME	Not Used	090-5006-00 **23-620 / 30-2600**
Torpedo Alley ‡	3	090-5011-00 **22-750 / 30-2600**	090-5013-00 **23-700 / 30-2600**	Not Used	090-5012-00 **23-800 / 30-2600**
Time Machine ‡	2	090-5011-00 **22-750 / 30-2600**	SAME	Not Used	Not Used

‡ These coils are dual-wound.

Playboy 35th Anniversary ††	2	090-5020-02 **22-900 -YEL-YEL-**	SAME	Not Used	Not Used
ABC Monday Night Football ††	2	090-5020-02 **22-900 -YEL-YEL-**	SAME	Not Used	Not Used

†† A very small % of these games used a 090-5020-20 coil which used a proto-type Solid State Flipper System. The two types of coils both are 22-900 coils; the only difference is the addition of the 1N5404 Diode on the (-02) coils which was used in the Deger Design.

Robocop	2	090-5020-20 **22-900 -YEL-YEL-**	SAME	Not Used	Not Used
Phantom of the Opera	2	090-5020-20 **22-900 -YEL-YEL-**	SAME	Not Used	Not Used
Back to the Future	2	090-5020-20 **22-900 -YEL-YEL-**	SAME	Not Used	Not Used
The Simpsons	2	090-5020-20 **22-900 -YEL-YEL-**	SAME	Not Used	Not Used
Checkpoint	2	090-5020-20 **22-900 -YEL-YEL-**	SAME	Not Used	Not Used
Teenage Mutant Ninja Turtles	2	090-5020-30 **23-900 -GRN-GRN-**	SAME	Not Used	Not Used
Batman	2	090-5020-30 **23-900 -GRN-GRN-**	SAME	Not Used	Not Used
Star Trek 25th Anniversary	2	090-5020-30 **23-900 -GRN-GRN-**	SAME	Not Used	Not Used
Hook	2	090-5030-00 **23-1100 -ORG-ORG-**	090-5020-30 **23-900 -GRN-GRN-**	Not Used	Not Used
Lethal Weapon 3	2	090-5030-00 **23-1100 -ORG-ORG-**	SAME	Not Used	Not Used
Star Wars	2	090-5032-00 **22-1080 -YEL-GRN-**	SAME	Not Used	Not Used
Rocky & Bullwinkle & Friends	2	090-5020-30 **23-900 -GRN-GRN-**	SAME	Not Used	Not Used
Jurassic Park	3	090-5020-30 **23-900 -GRN-GRN-**	SAME	Not Used	090-5030-00 **23-1100 -ORG-ORG-**

Table continued on the next page.

APPENDIX E

Flipper Coil Table †

GAME NAME	Nº of Flippers	FLIPPERS w/E.O.S. Switch		FLIPPERS no E.O.S. Switch	
		SPI Nº / GAUGE-TURNS / Color		SPI Nº / GAUGE-TURNS / Color	
		LOWER LEFT	LOWER RIGHT	UPPER LEFT	UPPER RIGHT
Last Action Hero	2	090-5020-30 **23-900 -GRN-GRN-**	SAME	Not Used	Not Used
Tales from the Crypt	3	090-5032-00 **22-1080 -YEL-GRN-**	SAME	Not Used	090-5041-00 **25-1800 -BLU-GRN-**
The Who's Tommy	3	090-5020-30 **23-900 -GRN-GRN-**	SAME	090-5041-00 **25-1800 -BLU-GRN-**	Not Used
WWF Royal Rumble	4	090-5032-00 **22-1080 -YEL-GRN-**	SAME	090-5041-00 **25-1800 -BLU-GRN-**	SAME
Guns N' Roses	3	090-5032-00 **22-1080 -YEL-GRN-**	SAME	090-5030-00 **23-1100 -ORG-ORG-**	Not Used
Maverick	3	090-5032-00 **22-1080 -YEL-GRN**	SAME	Not Used	090-5032-00 **22-1080 -YEL-GRN-**
Mary Shelley's Frankenstein	3	090-5030-00 **23-1100 -ORG-ORG-**	SAME	Not Used	090-5030-00 **23-1100 -ORG-ORG-**
Baywatch	4	090-5030-00 **23-1100 -ORG-ORG-**	090-5020-30 **23-900 -GRN-GRN-**	090-5025-00 **24-1570 -See Note-**	090-5030-00 **23-1100 -ORG-ORG-**
Batman Forever	3	090-5032-00 **22-1080 -YEL-GRN-**	090-5020-20 **22-900 -YEL-YEL-**	Not Used	090-5020-30 **23-900 -GRN-GRN-**
Apollo 13	2	090-5032-00 **22-1080 -YEL-GRN-**	SAME	Not Used	Not Used
Golden Eye	2	090-5032-00 **22-1080 -YEL-GRN-**	SAME	Not Used	Not Used
Twister	2	090-5020-20 **22-900 -YEL-YEL-**	090-5032-00 **22-1080 -YEL-GRN-**	Not Used	Not Used
ID4: Independence Day	3	090-5032-00 **22-1080 -YEL-GRN-**	SAME	Not Used	090-5020-30 **23-900 -GRN-GRN-**
Space Jam †	2	090-5032-00T **22-1080 -YEL-GRN-**	090-5020-20T **22-900 -YEL-YEL-**	Not Used	Not Used
The Star Wars Trilogy - Special Edition †	2	090-5032-00T **22-1080 -YEL-GRN-**	SAME	Not Used	Not Used
The Lost World: Jurassic Park †	2	090-5032-00T **22-1080 -YEL-GRN-**	SAME	Not Used	Not Used
The X-Files †	2	090-5032-00T **22-1080 -YEL-GRN-**	SAME	Not Used	Not Used
Starship Troopers †	3	090-5030-00T **23-1100 -ORG-ORG-**	SAME	Not Used	090-5032-00T **22-1080 -YEL-GRN-**
Viper Night Drivin' †	2	090-5030-00T **23-1100 -ORG-ORG-**	SAME	Not Used	Not Used
Lost In Space †	2	090-5030-00T **23-1100 -ORG-ORG-**	090-5032-00T **22-1080 -YEL-GRN-**	Not Used	Not Used
Godzilla †	2	090-5032-00T **22-1080 -YEL-GRN-**	SAME	Not Used	Not Used
South Park †	2	090-5030-00T **23-1100 -ORG-ORG-**	SAME	Not Used	Not Used
Harley-Davidson® † *and* Harley-Davidson® 2nd Ed. †	2	090-5032-00T **22-1080 -YEL-GRN-**	090-5030-00T **23-1100 -ORG-ORG-**	Not Used	Not Used
Striker Xtreme (NFL) †	3	090-5032-00T **22-1080 -YEL-GRN-**	090-5030-00T **23-1100 -ORG-ORG-**	090-5030-00T **23-1100 -ORG-ORG-**	Not Used
Sharkey's Shootout †	3	090-5030-00T **23-1100 -ORG-ORG-**	SAME	090-5030-00T **23-1100 -ORG-ORG-**	Not Used
High Roller Casino †	2	090-5020-20T **22-900 -YEL-YEL-**	090-5032-00T **23-1080 -YEL-GRN-**	Not Used	Not Used
Austin Powers™ †	2	090-5020-30 **23-900 -GRN-GRN-**	090-5030-00T **23-1100 -ORG-ORG-**	Not Used	Not Used
MONOPOLY® †	3	090-5032-00T **22-1080 -YEL-GRN-**	SAME	Not Used	090-5062-00T **23-1500 -BLU-BLU-**
Playboy †	2	090-5030-00T **23-1100 -ORG-ORG-**	SAME	Not Used	Not Used
RollerCoaster Tycoon™ †	4	090-5032-00T **22-1080 -YEL-GRN-**	SAME	090-5067-00T **25-1400 -RED-RED-**	090-5068-00T **25-1600 -WHT-WHT**
The Simpsons™ Pinball Party †	6* (5 with Flipper Bats)	090-5032-00T **22-1080 -YEL-GRN-**	SAME	Not Used	090-5030-00T **23-1100 -ORG-ORG-**
		** The Homer Head Assembly is affixed to an Upr. Rt. Style Flipper (no E.O.S. Switch):*		**Flippers (Mini-Bats) on 2nd Level Playfield:**	
			* 090-5020-20T **22-900 -YEL-YEL-**	090-5041-00T **25-1800 -BLU-GRN-**	090-5025-00T **24-1570 -See Note-**
Terminator® 3: Rise of the Machines™ †	2	090-5032-00T **22-1080 -YEL-GRN-**	SAME	Not Used	Not Used
The Lord of the Rings™ †	2	090-5020-20T **22-900 -YEL-YEL-**	SAME	Not Used	Not Used
Ripley's Believe It or Not!® †	3	090-5032-00T **22-1080 -YEL-GRN-**	SAME	Not Used	090-5067-00T **25-1400 -RED-RED-**

† Coil Part Nºs ending with a "T" signifies the Diode is on the top of the lug (on the coil-winding side); Coil Part Nºs ending with a "B" signifies the Diode is on the bottom of the lugs.

APPENDIX F

Motor Specification (White Star Board System* Only) Table

Game Name	Function	Specifications	Part Numer
Apollo 13	Rocket Up/Down Movement	Bowman Motor 24VAC 60Hz 3W 6 RPM CCW	515-6383-00 *incl. Connector*
	Moon Unit Rotational Orbit	Multi Products Motor 24VAC 50/60Hz 3W 6 RPM CCW	515-6487-00 *incl. Connector*
	Shaker	Johnson Motor *(Vibrator)* 10.5VDC 10 AMP 2950 RPM CW	041-5029-**00** *MOTOR ONLY*
Golden Eye	Satellite Left/Right Movement	Bowman Motor 24VAC 60Hz 3W 6 RPM CW	515-6528-00 *incl. Connector*
Twister	Spinning Disc with Magnet	Multi Products Motor 24VAC *(041-5026-00)* 50/60Hz 3W 325 RPM CCW	515-6347-00 *incl. Connector*
	Backbox Fan (Tornado Wind)	Multi Products Motor 24VAC *(041-5052-00)* 50/60Hz 3W 3600 RPM CW	515-6531-00 *incl. Connector*
ID4: Independence Day	Alien Head Open/Close Movement	Servo Motor *(94322)*	041-5045-00 *MOTOR ONLY*
SPACE JAM (NO MOTOR USED)			
The Star Wars Trilogy - S.E.	X-Wing Left/Right Movement	Bowman Motor 24VAC *(041-5058-00)* 60Hz 3W 10 RPM CCW	515-6383-01 *incl. Connector*
The Lost World: Jurassic Park	Snagger & Center Link Lift Up/Down Movement	Multi Products Motor 20VDC *(041-5059-03)* 9 RPM Non-Directional	515-6715-03 *incl. Connector*
	Shaker	Johnson Motor *(Vibrator)* 10.5VDC 10 AMP 2950 RPM CW	041-5029-**00** *MOTOR ONLY*
The X-Files	X-File Cabinet Lift Up/Down Movement	Multi Products Motor 20VDC 9 RPM CCW	041-5057-00 *MOTOR ONLY*
Starship Troopers	Warrior Bug Forward/Reverse Movement	Haydon Switch & Instrument, Inc. Stepper Motor 12VDC 4.6W *(041-5062-00)*, Series 36000: 1.4"ø *(Non-Captive Shaft **not included**)* HSI #36864-12 *(Unipolar)* Travel per Step: .004 Step Angle: 15°	515-6794-00 *incl. Connector* **Requires 7" Shaft:** 530-5503-00
VIPER NIGHT DRIVIN' (NO MOTOR USED)			
Lost In Space	Spinning Disc with Magnet	Multi Products Motor 24VAC *(041-5046-00)* 50/60Hz 3W 325 RPM CCW	515-6347-00 *incl. Connector*
Godzilla	Shaker ‡	Multi #3811 0630 Motor (Vibrator) 12VDC 3100 RPM CW *(w/DRL PTS)* ‡	041-5029-**01** *MOTOR ONLY*
SOUTH PARK (NO MOTOR USED)			
Harley-Davidson® *1st through 3rd Editions*	Shaker ‡	Multi #3811 0630 Motor (Vibrator) 12VDC 3100 RPM CW *(w/DRL PTS)* ‡	041-5029-**01** *MOTOR ONLY*
	Motorcycle Lift Up/Down Movement	Autotrol 24VAC *(041-5072-02)* 20 RPM CCW	515-7025-00 *incl. Connector*
Striker Xtreme (NFL)	Goalie (Linebacker) Left to Right Movement	Multi #3590 12VDC *(041-5075-00)* 60 RPM	515-7071-00 *incl. Connector*
Sharkey's Shootout	Mystery Ball Rotating Movement	Hankscraft Motor Model-E 24VAC *(041-5076-00)* 50/60Hz 3W 20 RPM CW	515-7095-00 *incl. Connector*
High Roller Casino	Roulette Wheel Rotating Movement	Multi Products Motor 20VDC *(041-5078-00)* 17 RPM CCW	515-7153-00 *incl. Connector*
	Up/Dn. Ramp in Slot Mach. Lift Up/Down Movement	Haydon Switch & Instrument, Inc. Stepper Motor 12VDC 4.6W *(041-5062-00)*, Series 36000: 1.4"ø *(Non-Captive Shaft **not included**)* HSI #36864-12 *(Unipolar)* Travel per Step: .004 Step Angle: 15°	515-6794-00 *incl. Connector* **Requires Shaft 4¼":** 530-5503-01
Austin Powers™	Time Machine Rotating Movement	Multi Products Motor 24VAC *(041-5079-00)* 50/60Hz 20RPM CCW	515-7141-00 *incl. Connector*
	Laser Beam Left to Right Directional	Autotrol Motor 24VAC *(041-5081-00)* 50/60Hz 4W 10RPM Bi-Directional	515-7171-00 *incl. Connector*
	Dr. Evil Target Lift Up/Down Movement	Hankscraft Motor Model-E 24VAC *(041-5030-00)* 50/60Hz 6RPM CCW	515-5900-00 *incl. Connector*
Monopoly®	Mini-Flipper (Waterworks) Rotating Movement	Multi Prod. Motor & Gear Box #7000 EX00159A 20VDC 50/60Hz 85RPM CC/CCW	041-5083-00 *MOTOR ONLY*
Playboy	Triangular Billboard Rotating Movement	Autotrol Motor *(BD511 150-1387)* 24VAC 50/60Hz 12RPM Bi-Directional	041-5086-02 *MOTOR ONLY*
	Centerfold Mechanism Open/Close Movement	Multi Products *(3680)* Motor 12v DC 10/12 RPM CC/CCW	041-5075-04 *MOTOR ONLY*
	Tease Drop Screen Lift Up/Down Movement	Haydon Switch & Instrument, Inc. Stepper Motor 12VDC 4.6W *(041-5062-00)*, Series 36000: 1.4"ø *(Non-Captive Shaft **not included**)* HSI #36864-12 *(Unipolar)* Travel per Step: .004 Step Angle: 15°	515-6794-00 *incl. Connector* **Requires 7" Shaft:** 530-5503-00

‡ ***Please Note:*** *"-01" Shaker Motor is **Not Compatible** with old Shaker Motor 041-5029-**00** (Shaker Motor Assy. 515-5893-00). THIS NEW MOTOR CAN ONLY BE USED IN NEW SHAKER MOTOR ASSY. 515-5893-**01**.*

Table continued on the next page.

Game Name	Function	Specifications	Part Number
ROLLERCOASTER TYCOON™ (NO MOTOR USED)			
THE SIMPSONS™ PINBALL PARTY (NO MOTOR USED)			
Terminator® 3: Rise of the Machines™	Backbox Ball Shooter Up/Down Movement	Multi Products Motor 24VAC *(041-5079-01)* 21 RPM CW	515-7317-00 *incl. Connector*
The Lord of the Rings™	Balrog *(Motor & Gate)* Open/Close Movement	Multi Prod. Motor 20VDC Series 600B *(or equiv.)* 50/60Hz 10 RPM Bi-Directional	041-5088-01 *MOTOR ONLY*
RIPLEY'S BELIEVE IT OR NOT!® (NO MOTOR USED)			
Elvis®	Elvis™ Front/Back Movement	Haydon Switch & Instrument, Inc. Stepper Motor 12VDC 10W *(041-5089-00)*, *(Non-Captive Shaft **not included**)* *HSI #46868-12-002*	500-6809-00 *incl. Connector* **Requires 7.25" Shaft:** 530-5658-00
	▶▶▶ OPTIONAL ◀◀◀ Shaker	Multi #3811 0630 Motor *(Vibrator)* 12VDC *(041-5029-**01**) 3100 RPM (w/DRL PTS)*	515-5893-01 *incl. Connector*
The Sopranos℠	Bada Bing! Girls x2 Rotating Posts Movement	Autotrol Synchronous Motor 24VAC 4W 50/60Hz 45.7/54.9 RPM Bi-Directional	041-5092-00 **w/1" Shaft + 12" Leads**
NASCAR® and [NDSE]	Back Panel Rotating *(Car)* Windmill *(Skill Ball Enter)*	Multi Products Motor & Gear Box 20VDC Model #8000 *(EX-04-073)* 10 RPM	041-5093-00 *MOTOR ONLY*
Grand Prix	Back Panel Rotating *(Car)* Windmill *(Skill Ball Enter)*	Multi Products Motor & Gear Box 20VDC Model #8000 *(EX-04-073)* 10 RPM	041-5093-00 *MOTOR ONLY*
World Poker Tour™ (WPT) (NO MOTOR USED)			
The Simpons™ Kooky Carnival	Bart on Skateboard Left/Right Movement	Multi Products Motor with Crank 24VAC *(041-5095-01)* 50/60Hz 3W 14 RPM	500-6947-01 *incl. Connector*
	Left & Right Ramps Up/Down Movement	Multi Products Motor 24VAC *(041-5048-01)* 50/60Hz 3W 15 RPM CCW *(Qty. 2 in game)*	515-7558-00 *incl. Connector*
	Shaker *(details in SKC Manual, Page **24**)*	Multi #3811 0630 Motor *(Vibrator)* 12VDC 3100 RPM *(w/DRL PTS)*	041-5029-**01** *MOTOR ONLY*
©Disney's Pirates of the Caribbean	Spinning Disk	Multi #3811**R** 0630 Motor *(Vibrator)* 12VDC *(041-5029-**04**)* 3100 RPM *(w/DRL PTS)* *-04 is RoHS compliant; can substitute with -01 domestic*	511-5024-04 *incl. Connector*
	Pirate Ship Sinking/Raising Movement	Multi Products Motor & Gear Box 24VDC Model #7000-DCM 12 RPM	041-5101-00 *MOTOR ONLY*
Family Guy™	Stewie Figurine Left & Right Movement	Stepper Motor NPM PF35T-48D4STD 5V RVB *(041-5102-00 Reference Only)*	511-5043-00 *incl. Connector*
Spider-Man™	Doc Ock, Sandman & 3-Bank Up/Down Movement	Sync. Motor 24VAC 50/60Hz 3W 12 RPM CW *(041-5103-00 Reference Only)*	511-5063-00 *incl. Connector*
	▶▶▶ OPTIONAL ◀◀◀ **Shaker Motor Kit** 502-5027-00	Multi #3811**R** 0630 Motor *(Vibrator)* 12VDC *(041-5029-**04**) 3100 RPM (w/DRL PTS)* *-04 is RoHS compliant; can substitute with -01 domestic*	515-5893-01 *incl. Connector*

APPENDIX F

Motor Specification Table

The following table only list games that used motors. *Part Numbers starting with "515-" will include the Wiring Harness & Connector.*

Game Name	Function	Specifications	Part №
ABC Monday Night Football	Goal Post Up/Down Movement	Motor 24v A.C. 60 RPM CW	515-5222-00
Phantom of the Opera	Organ Up/Down Movement	Bowman Motor 24v 60Hz 3W 11 RPM CCW	515-5256-00
Checkpoint	Mag Wheel (in Backbox)	Motor D.C. (KEN)	041-5005-00
	Shaker	Johnson Motor (Vibrator)	041-5002-00
Teenage Mutant Ninja Turtles	Spinning Pizza Ball Deflector	Gear Motor 24v A.C. 325 RPM CW	515-5397-00
Batman	Bar Target Up/Down Movement	Bowman Motor 24v 60Hz 3W 11 RPM CCW	515-5256-00
Star Trek 25th Anniversary	Swinging Target	Bowman Motor 24v 22½ RPM	515-5534-00
	Transporter F/X	Gear Motor 24v A.C. 3½ RPM	500-5421-00
	Cooling Fan (for Transporter F/X)	4½" Motor 12v	041-5014-00
Lethal Weapon 3	Spinning Light	Motor 2½ v A.C. 4000 RPM CCW	041-5017-00
Star Wars	Bar Target Up/Down Movement	Bowman Motor 24v 60hz 3W 11 RPM CCW	515-5256-00
	R2D2 Robot Left/Right Movement	Bowman Motor 24v A.C. 22½ RPM CW	515-5571-00
	Death Star Rotation	Bowman "G" Motor 24v A.C. 60Hz 6 RPM CW	515-5570-00
Rocky & Bullwinkle & Friends	Nell Log "Cutting Blade" Forward/Back Movement	Autotrol Model E Motor 24v 60hz 4W 3 RPM CCW	041-5023-00
Jurassic Park	T-Rex Left/Right Movement	Multi Motor 5v D.C.	041-5025-00
	T-Rex Up/Down Movement	Bowman Motor 24v 11 RPM CW	041-5026-00
	Shaker	Johnson Motor (Vibrator)	041-5002-00
Last Action Hero	Crane Left/Right Movement	Multi Products Motor 12v D.C. #3312 OSC	041-5027-00
	Shaker	Johnson Motor (Vibrator) 10.5v D.C. 10 AMP 2950 RPM CW	041-5029-00
Tales from the Crypt	Tombstone Up/Down Movement	Bowman Motor 24v A.C. 6 RPM CCW	515-5900-00
	Shaker	Johnson Motor (Vibrator) 10.5v D.C. 10 AMP 2950 RPM CW	041-5029-00
The Who's Tommy	Mirror Up/Down Movement	Bowman Motor 24v A.C. 6 RPM CCW	515-5900-00
	Flipper Blinders	Servo Motor (94102)	041-5032-00
	Spinning Airplane Propellers	Motor D.C.	041-5033-00
WWF Royal Rumble	Shaker	Johnson Motor (Vibrator) 10.5v D.C. 10 AMP 2950 RPM CW	041-5029-00
Maverick, The Movie	Turning Paddle Wheel	Motor 24v A.C. 10 RPM	041-5036-00
Mary Shelley's Frankenstein	Creature Head Left/Right Movement	Servo Motor (94102)	041-5032-00
Batman Forever	Cannon Left/Right Movement	Bowman Motor 24v A.C. 60Hz 3W 6 RPM CCW	515-6383-00

APPENDIX G

Part Number Prefix Classification Codes

I. Electrical Source, Energy & Signal Converters
- 010- Transformers
- 031- Speakers
- 090- Solenoids (Coils)
- 150- Filters, Outlets, Varistors, Thermistors
- 200- Fuses

II. Conductors, Connectors & Insulators
- 034- Line Cords
- 036- Cable Assemblies & Wiring Harnesses
- 041- Motors
- 045- Connectors (All Types)
- 055- Lugs (M/F), Pins (M/F), Discs, Ring Terminals, Terminal Strips, etc.
- 060- Polarizing Keys and Conn. Covers
- 077- Lamp Sockets

III. Circuits & Circuit Elements
- 100- ICs
- 110- Transistors
- 112- Diodes (All Types including LEDs & Modules)
- 121- Resistors
- 123- Resistors (Variable & Adjustable)
- 124- Regulators & Bridge Rectifiers
- 125- Capacitors (Radial Lytics & Ferrites)
- 126- Piezo Crystal
- 127- Heatsinks
- 130- Capacitors (Tecates & Ceramics)
- 140- Oscillators (Clocks/Crystals)
- 165- Light Bulbs
- 180- Switches
- 181- Switch Membranes (Pads) & Piezo Sensors
- 190- Relays
- 960- EPROM *(Raw Part)*
- 965- EPROM *(Programmed Part)*

IV. Bolts, Screws, Nuts, Washers & Nails
- 231- Bolts
- 232- Screws (Pan Head)
- 234- Screws (HWH)
- 237- Screws (Misc.)
- 240- Nuts (Misc.)
- 242- Washers (Flat, Round)
- 244- Washers (Split Lock)
- 245- Nyliners
- 246- Washers (Lockers, External Tooth)
- 281- Nails

V. Mechanical Components
- 249- Rivets
- 251- Pins (Dowel), Finishing Nails, Hairpins, Spring Pins and Clevis Pins
- 254- Stand-Offs, Spacers and Shims
- 260- Steel Ball (All Types Steel, Glowing, Delrin, etc.)
- 265- Springs (Extension)
- 266- Springs (Compression)
- 267- Springs (Torsion)
- 269- Springs (Washers - Belleville, Wave)
- 270- Retaining Rings
- 280- Grommets, Bushings and Nyliners
- 283- Bearings

VI. Handles, Locks, Catches, Latches, Keys
- 355- Handles, Locks, Catches, Latches and Keys

VII. Fabricated Parts
- 390- Hinges
- 501- Coin Doors
- 515- Sub-Assemblies
- 520- Printed Circuit Boards (PCBs)
- 522- Display Glass
- 525- Wood Parts
- 530- Screw Machined Parts
- 535- Fabricated Parts
- 545- Molded (Extruded) Plastic and Rubber Parts (Rings, Sleeves, etc.)
- 550- Molded (Inserts)

VIII. In-House Assemblies
- 500- End Product (Systems and Models)
- 502- Kits (Created In-House)
- 505- Cabinets (complete)
- 510- Riveted Sub-Assemblies (In-House)
- 511- Sub-Assemblies (In-House)
- 515- Sub-Assemblies*

**2 or more 515-'s but still a sub-assembly.*

IX. Bulk Materials
- 600- Braided Wire & Ground Straps
- 601- Stranded Wire
- 602- Ribbon Cable
- 604- Telephone Line Cord
- 605- Sleeving (Shrink Tubing)
- 625- Velcro (non-adhesive)
- 626- Foam Rubber, Foam Pads, Rubber Bumpers (Blue Pads), Tape (All Types) Velcro (adhesive) and String / Rope

X. Miscellaneous
- 000- Tools *(see also 777-)* and Supplies
- 040- Clamps, Ties & Clips
- 042- Pulleys
- 091- Coin Mechs
- 205- Fuse Holders
- 631- Staples
- 660- Glass (Playfield, Backglass, etc.)
- 675- Cleaners
- 705- Packing & Shipping Items
- 755- Instruction, Coin Cards, Ins. Sheets
- 756- Information Sheets, Service Bulletins, Instruction Sheets in Kits and Templates
- 777- Tools (Wrenches and Drivers)
- 780- Manuals
- 802- Decal Kits (comprised of 820's)
- 820- Decals, Mylar and Labels (Sheets/Sets)
- 803- Plastic Kits (comprised of 830's)
- 830- Plastic Pieces (Butyrate Sheets/Sets)
- 880- Toys, Models, Figurines, etc.
- 900- Game Posters

APPENDIX H

Playfield Inserts (Plastic Light Covers)

Patterns: **STARBURST** **STIPPLE** 	**STARBURST CIRCULAR** 5/8" ø **550-5000-XX**	**STARBURST CIRCULAR** 3/4" ø **550-5001-XX**	**STARBURST CIRCULAR** 1" ø **550-5002-XX**	**STARBURST CIRCULAR** 1-3/16" ø **550-5003-XX**	**STARBURST CIRCULAR** 1-1/2" ø **550-5004-XX**
STARBURST CIRCULAR 2-1/4" ø **550-5005-XX**	**STARBURST CIRCULAR** 2-3/4" ø **550-5006-XX**	**PLAIN CIRCULAR** 3/4" ø **550-5007-XX**	**PLAIN CIRCULAR** 1" ø **550-5008-XX**	**PLAIN CIRCULAR** 1-3/16" ø **550-5009-XX**	**PLAIN CIRCULAR** 1-1/2" ø **550-5010-XX**
PLAIN CIRCULAR 2-1/4" ø **550-5011-XX**	**PLAIN CIRCULAR** 2-3/4" ø **550-5012-XX**	**STIPPLE CIRCULAR** 1" ø **550-5048-XX**	**STIPPLE 1" SQUARE** 1" **550-5019-XX**	**ROLLOVER BUTTON BASE** **550-5026-XX**	**WHITE STAR** *(only in white)* **545-5015-00**
STIPPLE RECTANGULAR 1-1/2" X 3/4" **550-5018-XX**	**STIPPLE RECTANGULAR** 1-5/8" X 1-1/2" **550-5051-XX**	**STARBURST RECTANGULAR** 2-1/4" X 1-1/8" **550-5044-XX**	**PLAIN RECTANGULAR** 2-1/4" X 1-1/8" **550-5049-XX**	**PLAIN RECTANGULAR** 1-1/4" X 1-1/2" **550-5050-XX**	**PLAIN RECTANGULAR** 2" X 2-1/2" **550-5063-XX**
STARBURST MINI SHIELD 1" X 1" **550-5024-XX**	**STARBURST LARGE SHIELD** **550-5025-XX**	**MINI HOT DOG** 1-5/8" **550-5020-XX**	**BEVEL HOT DOG** 3-1/2" **550-5021-XX**	**PLAIN HOT DOG** 3-1/2" **550-5022-XX**	**BANANA** **550-5023-XX**
STARBURST ARROW-SMALL **550-5013-XX**	**STARBURST ARROW-LARGE** **550-5070-XX**	**STARBURST ARROW-HEAD SMALL** **550-5014-XX**	**STARBURST ARROW-HEAD LARGE** **550-5015-XX**	**STARBURST BULLET** **550-5016-XX**	**STARBURST TRIANGLE** **550-5017-XX**

Note: *The shapes and sizes shown above are not to scale. Some shapes may no longer be available in every color.*

Instructions: Parts which may come in various colors (i.e. targets, some posts, playfield inserts, etc.) end in a 2-digit number which correspond to the color of that part. The "**-XX**" in part number which may come in various colors should be replaced with the desired 2-Digit number corresponding to the color desired below. *Not all colors may be available.*

PLASTIC PART COLOR CHART

Nº	Color	Nº	Color	Nº	Color	Nº	Color	Nº	Color	Nº	Color
-00	**Black** or Solid Clear	**-03**	Amber	**-06**	Yellow	**-09**	Purple	**-12**	Fluor. Blue	**-15**	Luminescent
-01	Clear	**-04**	Green	**-07**	Orange	**-10**	Fluor. Orange	**-13**	Teal Green	**-16**	Gold
-02	Red	**-05**	Blue	**-08**	White	**-11**	Fluor. Green	**-14**	Gray	**-17**	Trans. Brown

APPENDIX I

Stand-Up Targets

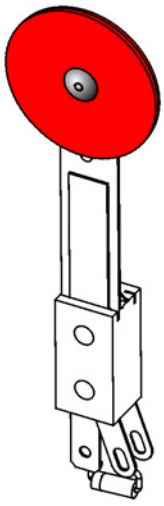

112-5003-00
Switch Diode, 1N4004
(all Stand-Up Targets)

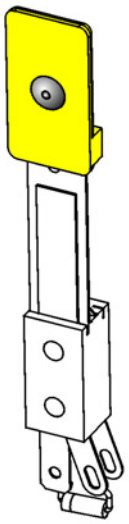

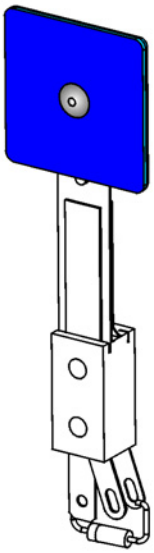

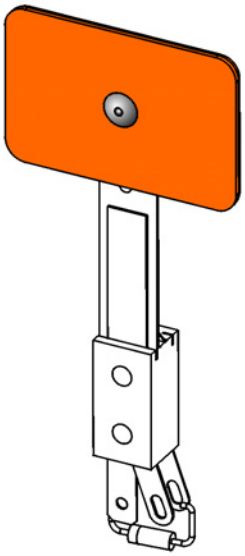

515-5966-XX
1" ROUND STAND-UP
SWITCH & TARGET
RIVETED ASSEMBLY*

STANDARD ANTI-LOFT
515-5967-XX *or* **515-7581-XX**
1" X 1/2" NARROW STAND-UP
SWITCH & TARGET
RIVETED ASSEMBLY*

515-5162-XX
1" X 1" SQUARE STAND-UP
SWITCH & TARGET
RIVETED ASSEMBLY*

515-6027-XX
1" X 1-1/2" RECTANGLE STAND-UP
SWITCH & TARGET
RIVETED ASSEMBLY*

**Note: Does not include the Switch Back Plate, Mounting Bracket or screws.*

To include the Switch Back Plate, Foam Pad, and Switch Mounting Bracket assembled, use the follow assembly part numbers (replace the -XX with 2-digit number from chart):

500-5835-XX : 1" ROUND TARGET
500-5857-XX : 1" X 1/2" NARROW TARGET
500-6985-XX : 1" X 1/2" ANTI-LOFT TARGET
500-5232-XX : 1" X 1" SQUARE TARGET
500-5321-XX : 1" X 1-1/2" RECT. TARGET

REAR VIEW 515-5967-06 SHOWN

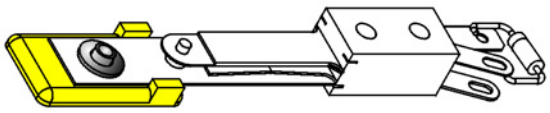

SHOWN BELOW : 500-5857-06
1" X 1/2" NARROW STAND-UP
TARGET ASSEMBLY COMPLETE

626-50**29**-00
Foam Pad, Square
.44" X .44" X .125" Thick (Self-Adhesive)**

*** Note:*
Use with all Switch & Targets THIS page except for 515-7581-XX.

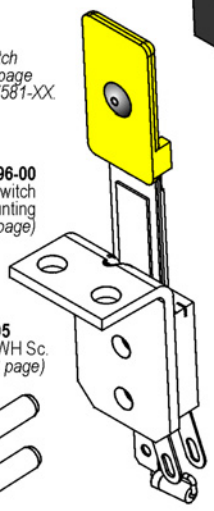

535-6896-00
Bracket, Switch Mounting
(all targets THIS page)

535-**6452-00**
Switch Back Plate**

237-5976-05
#6-32 X 3/4" SHWH Sc.
(all targets THIS page)

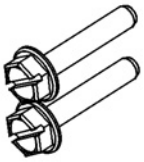

515-5967-XX
1" X 1/2" NARROW
STAND-UP (STANDARD)
SWITCH & TARGET
RIVETED ASSEMBLY*

-XX REPLACE WITH 2-DIGIT FOR COLOR:
-00 Black
-01 Clear
-02 Red
-03 Amber
-04 Green
-05 Blue
-06 Yellow
-07 Orange
-08 White
-09 Purple
-10 Fluor. Orange
-11 Fluor. Green
-12 Fluor. Blue
-13 Teal Green
-14 Gray
-15 Luminescent
-16 Gold

Note: Not all colors available.

SHOWN BELOW : 500-6985-04
1" X 1/2" NARROW ANTI-LOFT
STAND-UP TARGET
ASSEMBLY COMPLETE

626-**5069**-00
Foam Pad, Rectangle
.6" X .4" X .25" Thick (Self-Adhesive) ‡

535-**9823-01**
Switch Back Plate ‡

‡ Note: *Use only with 515-7581-XX Switch & Target Assembly unless otherwise noted.*

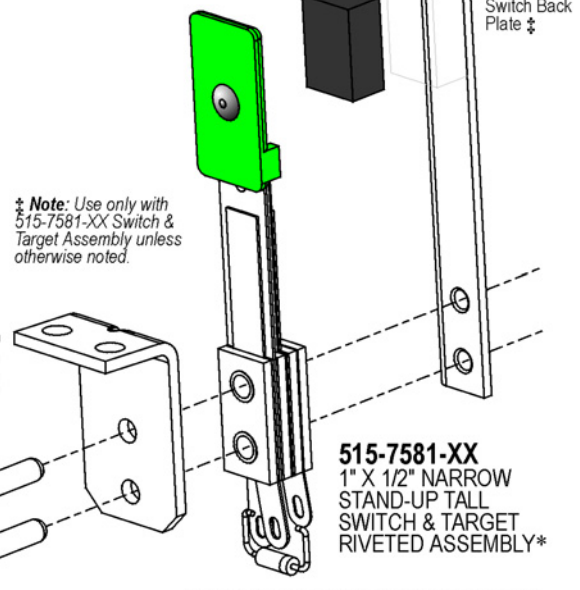

535-6896-00
Bracket, Switch Mounting
(all targets THIS page)

237-5976-05
#6-32 X 3/4" SHWH Sc.
(all targets THIS page)

515-7581-XX
1" X 1/2" NARROW
STAND-UP TALL
SWITCH & TARGET
RIVETED ASSEMBLY*

ORDERING NOTE: ***515-7581-XX*** *(500-6985-XX) differences from* ***515-5967-XX*** *(500-5857-XX) are:*

1. Switch & Target Taller *(Target sits higher over P/F)*
2. Switch Back Plate differs *(bend, shape & tab)*
3. Foam Pad differs *(thicker, taller, different type foam)*

**Note: Does not include the Switch Back Plate, Mounting Bracket or screws.*

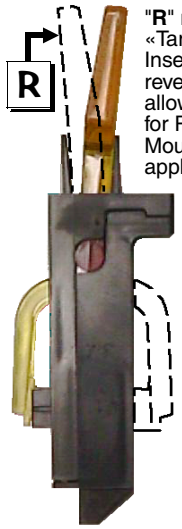

"**R**" means «Target Insert» is reversed, allowing for Rear Mounted application.

Take Note:

1. **Items A-E** come in various colors. *These targets may not be available in every color.* The **"-XX"** in should be replaced with the desired 2-Digit number for the color desired as described in the Color Chart below. *As of print date, the following colors were used :*
-01 Clear (A, D); **-02** Red (A, B, C, D, E); **-03** Amber (D, E); **-04** Green (A, B); **-05** Blue (C); **-06** Yellow (A, C), **-09** Purple (B, D); **-11** Fluorescent Green (A, B, D)
2. *For location(s) and type of Stand-Up Targets used, if any, see Section **4**, Chapter **1**, Parts Identification & Location.*

-XX REPLACE WITH 2-DIGIT FOR COLOR:
-00 Black
-01 Clear
-02 Red
-03 Amber
-04 Green
-05 Blue
-06 Yellow
-07 Orange
-08 White
-09 Purple
-10 Fluor. Orange
-11 Fluor. Green
-12 Fluor. Blue
-13 Teal Green
-14 Gray
-15 Luminescent
-16 Gold
Note: Not all colors available.

Nr.	STAND-UP TARGET PARTS	SPI PART Nr.
A	Modular Stand-Up Target Narrow Assy.	500-6138-XX
	Stand-Up Target Narrow (Insert)	**545-6138-XX**
B	Modular Stand-Up Target Square Assy.	500-6139-XX
	Stand-Up Target Square (Insert)	**545-6139-XX**
C	Modular Stand-Up Target Rectangle Assy.	500-6228-XX
	Stand-Up Target Rectangle (Insert)	**545-6228-XX**
D	Modular Stand-Up Target Round Assy.	500-6075-XX
	Stand-Up Target Round (Insert)	**545-6075-XX**
E	Mod. Stand-Up Target 1" Spherical Assy.	500-6189-XX
	Stand-Up Target 1" Spherical (Insert)	**545-6189-XX**

To Replace the « Target Insert » or change Target Orientation :

Items A-E Note: For the Target Assembly use the **"500-"** SPI Part Number(s) shown in the Parts Table below. To receive the Target Assembly with the « Target Insert » « ***R**eversed » simply add a **"R"** at the end of the Part Number. See Side View picture left to compare (dashed line shows target reversed).* For just the «Target Insert» use the **"545-"** SPI Part Number.

To reverse it yourself or to just change the insert:

1. With a small flat head screwdriver, push into the small tab at the bottom of the target front and give a slight twist motion to "pop" the two halves.

2. Push the Target Insert bottom in at the same time while you slide the top (front) part up, then let go of the insert as the two halves come apart.

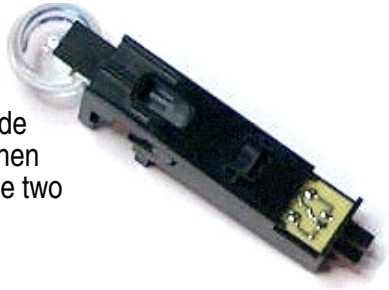

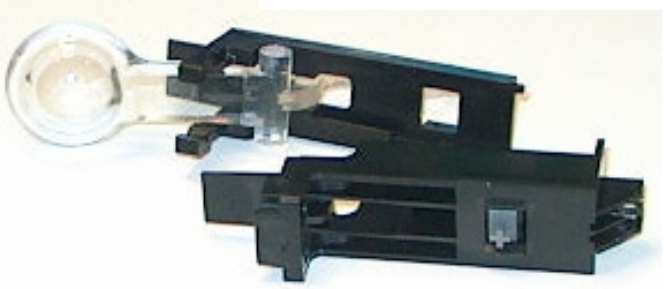

3. Replace target or reinsert it into the other size while sliding the two halves back together.

Note: *If you were reversing the orientation, don't forget to also turn the Switch Actuator PCB **180°**. Test Switch.*

APPENDIX J

Coin Cards (USA & International Pricing Defaults) ▶ For Yellow Stock add -Y to the Part Number

*If more than one Pricing Scheme is available for countries listed, the **F.** listed beside the option, denotes the Factory Default Setting.*

FOR VIEWS OF THE LATEST or OPTIONAL USA, INTERNATIONAL / EURO AND CUSTOM COIN CARDS, VISIT OUR WEBSITE.

Not Shown USA 755-5400-10 Tournament Option $2 = X1; 755-5400-11 Tournament Option $1.50 = X1

USA 10 **F.**	USA 10	USA 2-7 *or* CANADA	*FOR CUSTOM PRICING* †	USA 3 *with* ToPS™	USA 5 *with* ToPS™
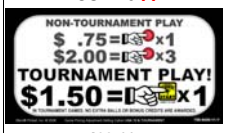		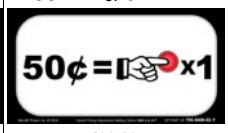			
755-5400-11 *Front*	755-5400-11 *Back*	755-5400-02 *Front*	755-5400-01, -02 *or* -04 *Back*	755-5400-03 *or* -09 *Front*	755-5400-03 *Back* / -08 *Front*
AUSTRALIA 1 *F.*	**AUSTRALIA 2**	**CROATIA**	*FOR CUSTOM PRICING* †	**DENMARK 1 *F.***	**DENMARK 2**
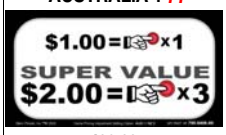					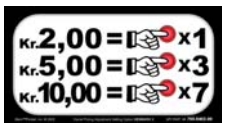
755-5406-00 *Front*	755-5406-00 *Back*	755-5410-00 *Front*	755-5410-00 *Back*	755-5402-00 *Front*	755-5402-00 *Back*
JAPAN 1	**JAPAN 2 *F.***	**MIDDLE EAST**	*ANY COUNTRY CAN USE*	**NEW ZEALAND 1 *F.***	**NEW ZEALAND 2**
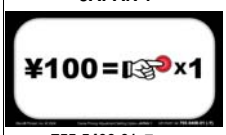	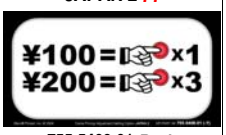	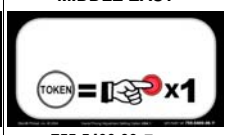	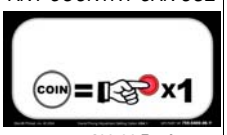		
755-5408-01 *Front*	755-5408-01 *Back*	755-5400-06 *Front*	*755-5400-06 Back*	*755-5406-00 Back*	755-5406-00 *Front*
NORWAY 1 *F.*	**NORWAY 2**	**RUSSIA *F.***	**RUSSIA (ALTERNATE)**	**SOUTH AFRICA**	*FOR CUSTOM PRICING* †
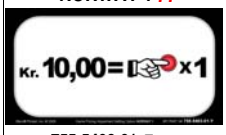	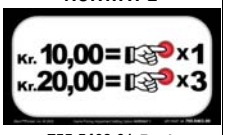	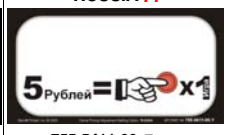	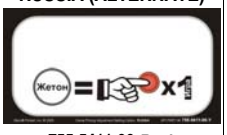		
755-5403-01 *Front*	755-5403-01 *Back*	755-5411-00 *Front*	755-5411-00 *Back*	755-5409-01 *Front*	755-5409-01 *Back*
SWEDEN 1 *F.*	**SWEDEN 2**	**SWITZERLAND 1 *F.***	**SWITZERLAND 2**	**TAIWAN**	*FOR CUSTOM PRICING* †
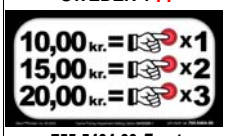	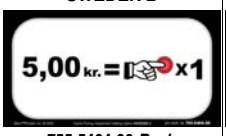	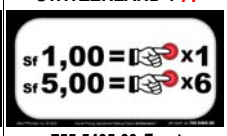	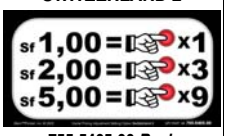		
755-5404-00 *Front*	755-5404-00 *Back*	755-5405-00 *Front*	755-5405-00 *Back*	755-5412-00 *Front*	755-5412-00 *Back*
UK 1	**UK 3**	**UK 5 *F.***	*FOR CUSTOM PRICING* †		
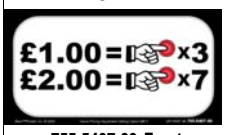	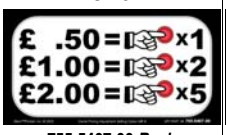	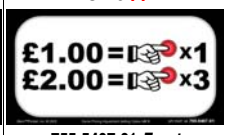			
755-5407-00 *Front*	755-5407-00 *Back*	755-5407-01 *Front*	755-5407-01 *Back*		

Appendix J Notes:

1. Coin Card on Game is determined by original shipping country destination.
2. Optional Coin Card(s), are available via your distributor or via free download @ www.sternpinball.com/**coinagecards.shtml**.

Older style Coin Cards (foreign or domestic) not available on our website or no longer available through your distributor, are obsolete.

3. Coin Cards which have a Blank Backside *can be used for* †***Custom Pricing***.

Not Shown EURO 755-5401-20 Tournament Custom (can fill in your own pricing).

EURO 1	EURO 2	EURO 3	EURO 4	EURO 5	EURO 6
	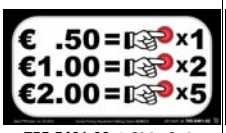	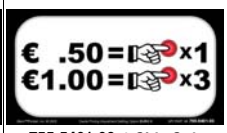	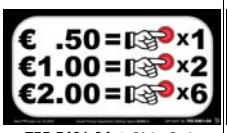	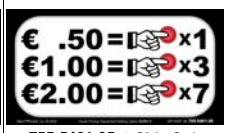	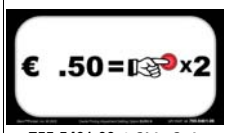
755-5401-01 *1-Side Only*	755-5401-02 *1-Side Only*	755-5401-03 *1-Side Only*	755-5401-04 *1-Side Only*	755-5401-05 *1-Side Only*	755-5401-06 *1-Side Only*
EURO 7	**EURO 8**	**EURO 9**	**EURO 10**	**EURO 11**	**EURO 12**
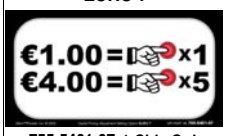	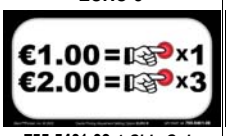	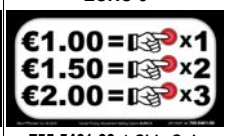	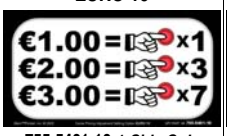	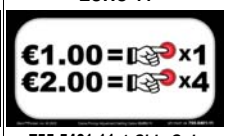	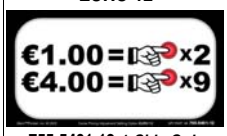
755-5401-07 *1-Side Only*	755-5401-08 *1-Side Only*	755-5401-09 *1-Side Only*	755-5401-10 *1-Side Only*	755-5401-11 *1-Side Only*	755-5401-12 *1-Side Only*

◣ EURO FACTORY DEFAULT SUMMARY TABLE ◢

EURO 1	EURO 2	EURO 3	EURO 4	EURO 5	EURO 6	EURO 7	EURO 8	EURO 9	EURO 10	EURO 11	EURO 12
BELGIUM ITALY 1 PORTUGAL	*GERMANY 2*	*NETHERLANDS SPAIN*			*GREECE*		*FINLAND*	*AUSTRIA*	*FRANCE*		

Section ***3***, *Chapter **4**, **GO TO ADJUSTMENTS MENU**, Adj. **18**, **Game Pricing**, **USA & International (non-Euro) and Euro 1-12 Summary & International (Euro) Standard Pricing Select Tables**, summarizes Standard or Custom Pricing Schemes & the Dip Switch Setting required.*

APPENDIX A

Pinball Game Firmware (White Star Board System* Only) Table

See website for the latest International Code or Updated USA version / checksums

ROM	Chip Size	Program Part Nº	USA Ver. & Check Sum	Bd. Loc.	Raw Part Nº
Apollo 13 (Note 1)					
Game ROM	(1M)	965-0208-00	**A5.01 | $09FF**	**U210**	960-5009-00
Sound	(512K)	965-0212-00	1.00 | $5244	U7	960-7001-02
Display	(4M)	965-0213-00	**A5.00 | $B92B**	**ROM 0**	960-5015-01
Voice 1	(4M)	965-0209-00	1.00 | $7FC7	U17	n/a (masked)
Voice 2	(4M)	965-0210-00	1.00 | $8E55	U21	n/a (masked)
Voice 3	(4M)	965-0211-00	1.00 | $08EE	U36	n/a (masked)
Golden Eye (Note 1)					
Game ROM	(1M)	965-0214-42	**A4.04 | $3FFF**	**U210**	960-5009-00
Sound	(512K)	965-0217-42	1.00 | $D615	U7	960-7001-02
Display	(4M)	965-0218-42	**A4.00 | $E6ED**	**ROM 0**	960-5015-01
Voice 1	(4M)	965-0215-42	1.00 | $3E32	U17	n/a (masked)
Voice 2	(4M)	965-0216-42	1.00 | $71F0	U21	n/a (masked)
Twister (Note 2)					
Game ROM	(1M)	965-0219-41	**A4.05 | $E9FF**	**U210**	960-5009-00
Sound	(512K)	965-0221-41	1.00 | $1FFF	U7	960-7001-02
Display	(4M)	965-0222-41	**A4.00 | $FD01**	**ROM 0**	960-5015-01
Voice 1	(4M)	965-0220-41	1.00 | $3650	U17	960-5015-01
Voice 2	(4M)	965-0223-41	1.00 | $9300	U21	960-5015-01
ID4: Independence Day (Note 2)					
Game ROM	(1M)	965-0224-45	**A2.02 | $9CFF**	**U210**	960-5009-00
Sound	(512K)	965-0227-45	1.00 | $222B	U7	960-7001-02
Display	(4M)	965-0228-45	**A2.00 | $ABF7**	**ROM 0**	960-5015-01
Voice 1	(4M)	965-0225-45	1.00 | $3AE1	U17	960-5015-01
Voice 2	(4M)	965-0226-45	1.00 | $206E	U21	960-5015-01
Space Jam (Note 2)					
Game ROM	(1M)	965-0229-43	**A3.00 | $E6FF**	**U210**	960-5009-00
Sound	(512K)	965-0233-43	1.00 | $F1E7	U7	960-7001-02
Display	(4M)	965-0234-43	**A3.00 | $0057**	**ROM 0**	960-5015-01
Voice 1	(4M)	965-0230-43	1.00 | $DBA8	U17	960-5015-01
Voice 2	(4M)	965-0231-43	1.00 | $DDF1	U21	960-5015-01
Voice 3	(4M)	965-0232-43	1.00 | $F32A	U36	960-5015-01
The Star Wars Trilogy - Special Edition (S.E.) (Note 2)					
Game ROM	(1M)	965-0235-56	**A4.03 | $5EFF**	**U210**	960-5009-00
Sound	(512K)	965-0238-56	1.00 | $4A7D	U7	960-7001-02
Display	(4M)	965-0239-56	**A4.00 | $8817**	**ROM 0**	960-5015-01
Voice 1	(4M)	965-0236-56	1.00 | $E66B	U17	960-5015-01
Voice 2	(4M)	965-0237-56	1.00 | $8F54	U21	960-5015-01
The Lost World: Jurassic Park (Note 2)					
Game ROM	(1M)	965-0240-53	**A2.02 | $C8FF**	**U210**	960-5009-00
Sound	(512K)	965-0243-53	1.00 | $A35B	U7	960-7001-02
Display	(4M)	965-0244-53	**A2.01 | $7F46**	**ROM 0**	960-5015-01
Voice 1	(4M)	965-0241-53	1.00 | $1D27	U17	960-5015-01
Voice 2	(4M)	965-0242-53	1.00 | $8DA4	U21	960-5015-01
The X-Files (Note 2)					
Game ROM	(1M)	965-0245-46	**A3.03 | $A2FF**	**U210**	960-5009-00
Sound	(512K)	965-0248-46	1.00 | $6648	U7	960-7001-02
Display	(4M)	965-0249-46	**A3.00 | $66D0**	**ROM 0**	960-5015-01
Voice 1	(4M)	965-0246-46	1.00 | $349D	U17	960-5015-01
Voice 2	(4M)	965-0247-46	1.00 | $629C	U21	960-5015-01
Starship Troopers (Note 3)					
Game ROM	(1M)	965-0250-59	**A2.00 | $85FF**	**U210**	960-5009-00
Sound	(512K)	965-0253-59	1.00 | $64B2	U7	960-7001-02
Display	(4M)	965-0254-59	**A2.00 | $E77B**	**ROM 0**	960-5015-01
Voice 1	(4M)	965-0251-59	1.00 | $152A	U17	960-5015-01
Voice 2	(4M)	965-0252-59	1.00 | $0291	U21	960-5015-01
Voice 3	(4M)	965-0255-59	1.00 | $95A7	U36	960-5015-01
Viper Night Drivin' (Note 4)					
Game ROM	(1M)	965-0266-35	**A2.01 | $C5FF**	**U210**	960-5009-00
Sound	(512K)	965-0271-35	1.00 | $4DF8	U7	960-7001-02
Display	(4M)	965-0272-35	**A2.01 | $C17D**	**ROM 0**	960-5015-01
Voice 1	(4M)	965-0267-35	1.00 | $8018	U17	960-5015-01
Voice 2	(4M)	965-0268-35	1.00 | $2157	U21	960-5015-01
Voice 3	(4M)	965-0269-35	1.00 | $B5A6	U36	960-5015-01
Voice 4	(4M)	965-0270-35	1.00 | $D01E	U37	960-5015-01
Lost In Space (Note 4)					
Game ROM	(1M)	965-0282-60	**A1.01 | $B2FF**	**U210**	960-5009-00
Sound	(512K)	965-0287-60	1.00 | $A6AF	U7	960-7001-02
Display	(4M)	965-0288-60	**A1.02 | $32AB**	**ROM 0**	960-5015-01
Voice 1	(4M)	965-0283-60	1.00 | $4391	U17	960-5015-01
Voice 2	(4M)	965-0284-60	1.00 | $8215	U21	960-5015-01
Voice 3	(4M)	965-0285-60	1.00 | $5B32	U36	960-5015-01
Voice 4	(4M)	965-0286-60	1.00 | $8971	U37	960-5015-01
Godzilla (Note 4)					
Game ROM	(1M)	965-0289-40	**A2.05| $B1FF**	**U210**	960-5009-00
Sound	(512K)	965-0294-40	1.00 | $0CC8	U7	960-7001-02
Display	(4M)	965-0295-40	**A2.00 | $C929**	**ROM 0**	960-5015-01
Voice 1	(4M)	965-0290-40	1.00 | $0D75	U17	960-5015-01
Voice 2	(4M)	965-0291-40	1.00 | $CCCF	U21	960-5015-01
Voice 3	(4M)	965-0292-40	1.00 | $227F	U36	960-5015-01
Voice 4	(4M)	965-0293-40	1.00 | $DB69	U37	960-5015-01
South Park (Notes 4, 5)					
Game ROM	(1M)	965-0301-71	**A1.03 | $58FF**	**U210**	960-5009-00
Sound	(512K)	965-0306-71	1.00 | $1286	U7	960-7001-02
Display	(4M)	965-0307-71	**A1.01 | $166F**	**ROM 0**	960-5015-01
Voice 1	(8M)	965-0302-71	1.00 | $7BF8	U17	960-5016-00
Voice 2	(8M)	965-0303-71	1.00 | $9CCC	U21	960-5016-00
Voice 3	(8M)	965-0304-71	1.00 | $ADD9	U36	960-5016-00
Voice 4	(8M)	965-0305-71	1.00 | $6659	U37	960-5016-00
Harley-Davidson® (Notes 4, 5, 6) *Original (1999-2001)*					
Game ROM	(1M)	965-0319-67	**A1.03 | $3EFF**	**U210**	960-5009-00
Sound	(512K)	965-0320-67	1.00 | $F4FF	U7	960-7001-02
Display	(4M)	965-0321-67	**A1.04 | $FC7C**	**ROM 0**	960-5015-01
Voice 1	(8M)	965-0322-67	1.00 | $CD26	U17	960-5016-00
Voice 2	(8M)	965-0323-67	1.00 | $9396	U21	960-5016-00
Voice 3	(8M)	965-0324-67	1.00 | $FB72	U36	960-5016-00
Voice 4	(4M)	965-0325-67	1.00 | $6100	U37	960-5015-01
▶ **Harley-Davidson® (Notes 4, 5, 6, 8) *2nd Edition (2002-2003)***					
Game ROM	(1M)	965-0319-67**A**	**A1.08 | $23FF**	**U210**	960-5009-00
Display	(4M)	965-0321-67**A**	**A1.05 | $B594**	**ROM 0**	960-5015-01
▶ **Harley-Davidson® (Notes 4, 5, 6, 8) *3rd Edition (2004)***					
Game ROM	(1M)	965-0319-87	**A4.00 | $1CFF**	**U210**	960-5009-00
Display	(4M)	965-0321-87	**A4.00 | $F4FF**	**U5**	960-5015-01
Striker Xtreme (Notes 4, 5)					
Game ROM	(1M)	965-0326-68	**A1.03 | $E4FF**	**U210**	960-5009-00
Sound	(512K)	965-0327-68	1.00 | $3BCA	U7	960-7001-02
Display	(4M)	965-0328-68	**A1.03 | $1957**	**ROM 0**	960-5015-01
Voice 1	(8M)	965-0329-68	1.00 | $482A	U17	960-5016-00
Voice 2	(8M)	965-0330-68	1.00 | $7312	U21	960-5016-00
Voice 3	(8M)	965-0331-68	1.00 | $DE2F	U36	960-5016-00
Voice 4	(8M)	965-0332-68	1.00 | $C508	U37	960-5016-00
NFL (Notes 4, 5) *Not on CD-R or Website: Code through Distributor Only.*					
Game ROM	(1M)	965-0339-73	**A1.00 | $D2FF**	**U210**	960-5009-00
Sound	(512K)	965-0340-73	1.00 | $	U7	960-7001-02
Display	(4M)	965-0341-73	**A1.01 | $845A**	**ROM 0**	960-5015-01
Voice 1	(8M)	965-0342-73	1.00 | $	U17	960-5016-00
Voice 2	(8M)	965-0343-73	1.00 | $	U21	960-5016-00
Voice 3	(8M)	965-0344-73	1.00 | $	U36	960-5016-00
Voice 4	(8M)	965-0345-73	1.00 | $	U37	960-5016-00
Sharkey's Shootout (Notes 4, 5)					
Game ROM	(1M)	965-0333-72	**A2.11 | $49FF**	**U210**	960-5009-00
Sound	(512K)	965-0334-72	1.01 | $9796	U7	960-7001-02
Display	(4M)	965-0335-72	**A2.01 | $6C33**	**ROM 0**	960-5015-01
Voice 1	(8M)	965-0336-72	1.00 | $58EA	U17	960-5016-00
Voice 2	(8M)	965-0337-72	1.00 | $272B	U21	960-5016-00
Voice 3	(8M)	965-0338-72	1.00 | $41AE	U36	960-5016-00
High Roller Casino (Notes 4, 5)					
Game ROM	(1M)	965-0346-65	**A3.00 | $90FF**	**U210**	960-5009-00
Sound	(512K)	965-0347-65	1.00 | $581C	U7	960-7001-02
Display	(4M)	965-0348-65	**A3.00 | $74B3**	**ROM 0**	960-5015-01
Voice 1	(8M)	965-0349-65	1.00 | $E12D	U17	960-5016-00
Voice 2	(8M)	965-0350-65	1.00 | $38F4	U21	960-5016-00
Voice 3	(8M)	965-0351-65	1.00 | $1B54	U36	960-5016-00
Voice 4	(8M)	965-0352-65	1.00 | $D720	U37	960-5016-00
Austin Powers™ (Notes 4, 5)					
Game ROM	(1M)	965-0353-74	**A3.02 | $5DFF**	**U210**	960-5009-00
Sound	(512K)	965-0354-74	1.00 | $DA7B	U7	960-7001-02
Display	(4M)	965-0035-74	**A3.00 | $6A34**	**ROM 0**	960-5015-01
Voice 1	(8M)	965-0356-74	1.00 | $D2B9	U17	960-5016-00
Voice 2	(8M)	965-0357-74	1.00 | $9E75	U21	960-5016-00
Voice 3	(8M)	965-0358-74	1.00 | $51F3	U36	960-5016-00
Voice 4	(8M)	965-0359-74	1.00 | $0AE5	U37	960-5016-00
MONOPOLY® (Notes 4, 5)					
Game ROM	(1M)	965-0360-75	**A3.20 | $07FF**	**U210**	960-5009-00
Sound	(512K)	965-0361-75	1.00 | $8C18	U7	960-7001-02
Display	(4M)	965-0362-75	**A3.01 | $A381**	**ROM 0**	960-5015-01
Voice 1	(8M)	965-0363-75	1.00 | $35E6	U17	960-5016-00
Voice 2	(8M)	965-0364-75	1.00 | $B35A	U21	960-5016-00
Voice 3	(8M)	965-0365-75	1.00 | $8A9F	U36	960-5016-00
Playboy (Notes 4, 5, 7)					
Game ROM	(1M)	965-0367-76	**A5.00 | $7DFF**	**U210**	960-5009-00
Sound	(512K)	965-0368-76	1.02 | $E7C2	U7	960-7001-02
Display	(4M)	965-0369-76	**A5.00 | $A5FF**	**ROM 0**	960-5015-01
Voice 1	(8M)	965-0370-76	1.00 | $9ABE	U17	960-5016-00
Voice 2	(8M)	965-0371-76	1.00 | $9F34	U21	960-5016-00
Voice 3	(8M)	965-0372-76	1.00 | $374B	U36	960-5016-00
Voice 4	(8M)	965-0373-76	1.00 | $237A	U37	960-5016-00
RollerCoaster Tycoon™ (Notes 4, 5, 7)					
Sound	(512K)	965-0374-78	1.00 | $F663	U7	960-7001-02
Game ROM	(1M)	965-0375-78	**A7.02| $E5FF**	**U210**	960-5009-00
Voice 1	(8M)	965-0377-78	1.00 | $3C4A	U17	960-5016-00
Voice 2	(8M)	965-0378-78	1.00 | $057A	U21	960-5016-00
Voice 3	(8M)	965-0379-78	1.00 | $04D7	U36	960-5016-00
Display	(4M)	965-0376-78	**A7.01 | $8DDB**	**U5** Disp. Cntrlr.	
The Simpsons™ Pinball Party (Notes 4, 5, 7)					
Sound	(512K)	965-0381-77	1.01 | $A7EE	U7	960-7001-02
Game ROM	(1M)	965-0382-77	**A4.00 | $4FFF**	**U210**	960-5009-00
Voice 1	(8M)	965-0383-77	1.00 | $9719	U17	960-5016-00
Voice 2	(8M)	965-0384-77	1.00 | $16ED	U21	960-5016-00
Voice 3	(8M)	965-0385-77	1.00 | $ADCE	U36	960-5016-00
Voice 4	(8M)	965-0386-77	1.00 | $E7E5	U37	960-5016-00
Display	(4M)	965-0387-77	**A4.00 | $8A03**	**U5** DC PCB	960-5015-01
Terminator® 3: Rise of the Machines™ (Notes 4, 5, 7)					
Sound	(512K)	965-0388-79	1.00 | $D2FD	U7	960-7001-02
Game ROM	(1M)	965-0389-79	**A4.00 | $F8FF**	**U210**	960-5009-00
Voice 1	(8M)	965-0390-79	1.00 | $1838	U17	960-5016-00
Voice 2	(8M)	965-0391-79	1.00 | $F0D5	U21	960-5016-00
Voice 3	(8M)	965-0392-79	1.00 | $89DA	U36	960-5016-00
Voice 4	(8M)	965-0393-79	1.00 | $1200	U37	960-5016-00
Display	(4M)	965-0394-79	**A4.00 | $6E49**	**U5** DC PCB	960-5015-01
The Lord of the Rings™ (Notes 7, 8)					
Sound	(512K)	965-0401-80	1.01 | $36BC	U7	960-7001-02
Game ROM	(1M)	965-0402-80	**A10.00 | $84FF**	**U210**	960-5009-00
Voice 1	(8M)	965-0403-80	1.00 | $1792	U17	960-5016-00
Voice 2	(8M)	965-0404-80	1.00 | $67F1	U21	960-5016-00
Voice 3	(8M)	965-0405-80	1.00 | $89B6	U36	960-5016-00
Voice 4	(8M)	965-0406-80	1.00 | $EA49	U37	960-5016-00
Display	(4M)	965-0407-80	**A10.00 | $1669**	**U5** DC PCB	960-5015-01

Sound & Voice 1-4 identical to above H-D® Original.

footnotes : 1 — 8 *see the bottom of the next page (**A2**).*

APPENDIX A

Pinball Game Firmware (White Star Board System* & S.A.M. System** Only) Table

See website for the latest International Code or Updated USA version / checksums

ROM	Chip Size	Program Part Nº	USA Ver. & Check Sum	Bd. Loc.	Raw Part Nº
Ripley's Believe It or Not!® (Notes 7, 8)					
Sound	(512K)	965-0408-81	1.00 | $D93D	U7	960-7001-02
Game ROM	(1M)	965-0409-81	**A3.20 | $43FF**	**U210**	960-5009-00
Voice 1	(8M)	965-0410-81	1.00 | $067B	U17	960-5016-00
Voice 2	(8M)	965-0411-81	1.00 | $C8B8	U21	960-5016-00
Voice 3	(8M)	965-0412-81	1.00 | $64C2	U36	960-5016-00
Voice 4	(8M)	965-0413-81	1.00 | $5341	U37	960-5016-00
Display	(4M)	965-0414-81	**A3.00 | $DE4B**	**U5** DC PCB	960-5015-01
Elvis® (Notes 7, 8)					
Sound	(512K)	965-0415-84	1.00 | $8CD2	U7	960-7001-02
Game ROM	(1M)	965-0416-84	**A5.00 | $50FF**	**U210**	960-5009-00
Voice 1	(8M)	965-0417-84	1.00 | $538D	U17	960-5016-00
Voice 2	(8M)	965-0418-84	1.00 | $8BCD	U21	960-5016-00
Voice 3	(8M)	965-0419-84	1.00 | $60F8	U36	960-5016-00
Voice 4	(8M)	965-0420-84	1.00 | $14D8	U37	960-5016-00
Display	(4M)	965-0421-84	**A5.00 | $A1F6**	**U5** DC PCB	960-5015-01
The Sopranos℠ (Notes 7, 8)					
Sound	(512K)	965-0422-85	4.00 | $9B5A	U7	960-7001-02
Game ROM	(1M)	965-0423-85	**A5.00 | $5BFF**	**U210**	960-5009-00
Voice 1	(8M)	965-0424-85	3.00 | $F01E	U17	960-5016-00
Voice 2	(8M)	965-0425-85	1.04 | $C14C	U21	960-5016-00
Voice 3	(8M)	965-0426-85	1.04 | $47A3	U36	960-5016-00
Voice 4	(8M)	965-0427-85	1.04 | $ADCD	U37	960-5016-00
Display	(4M)	965-0428-85	**A5.00 | $B4BB**	**U5** DC PCB	960-5015-01
NASCAR® (Notes 7, 8)					
Sound	(512K)	965-0429-86	2.00 | $32B3	U7	960-7001-02
Game ROM	(1M)	965-0430-86	**A4.50 | $39FF**	**U210**	960-5009-00
Voice 1	(8M)	965-0431-86	2.00 | $CFFB	U17	960-5016-00
Voice 2	(8M)	965-0432-86	2.00 | $22C0	U21	960-5016-00
Voice 3	(8M)	965-0433-86	2.00 | $5FC8	U36	960-5016-00
Voice 4	(8M)	965-0434-86	2.00 | $2902	U37	960-5016-00
Display	(4M)	965-0435-86	**A4.00 | $92BD**	**U5** DC PCB	960-5015-01
Grand Prix (Notes 7, 8)					
Sound	(512K)	965-0429-91	V1.00 | $6F89	U7	960-7001-02
Game ROM	(1M)	965-0430-91	**A4.50 | $5EFF**	**U210**	960-5009-00
Voice 1	(8M)	965-0431-91	1.00 | $CE0E	U17	960-5016-00
Voice 2	(8M)	965-0432-91	1.00 | $F4C6	U21	960-5016-00
Voice 3	(8M)	965-0433-91	1.00 | $057D	U36	960-5016-00
Voice 4	(8M)	965-0434-91	1.00 | $2646	U37	960-5016-00
Display	(4M)	965-0435-91	**A4.00 | $DA8E**	**U5** DC PCB	960-5015-01
[NDSE] (Notes 7, 8) *Call for more info if code update required.*					
Sound	(512K)	965-0436-97		U7	960-7001-02
Game ROM	(1M)	965-0437-97		**U210**	960-5009-00
Voice 1	(8M)	965-0438-97		U17	960-5016-00
Voice 2	(8M)	965-0439-97		U21	960-5016-00
Voice 3	(8M)	965-0440-97		U36	960-5016-00
Voice 4	(8M)	965-0441-97		U37	960-5016-00
Display	(4M)	965-0442-97		**U5** DC PCB	960-5015-01

**** GAMES BELOW THIS LINE / NEXT COLUMN ARE S.A.M. SYSTEM GAMES**

TO ORDER MEMORY STICK WITH GAME FILES FROM YOUR DISTRIBUTOR, USE SPI PART NUMBER 970-0128-00 & INCLUDE THE GAME NAME / LANGUAGE FILE(S) DESIRED.

World Poker Tour™ Pinball (WPT) (Notes 7, 9)

Boot B-02 (8M) **965-BOOT-SAM** **1.04** | $7E62 **U9** *960-5016-00 unprogrammed*

Memory Stick 128MB (970-0128-00)	Version	System	Bin Files:
English + Spanish	1.12AL	1.17+	WPT0112AL.bin
English Only	1.12A	1.17+	WPT0112A.bin
English + French	1.12AF	1.17+	WPT0112AF.bin
French Only	1.12F	1.17+	WPT0112F.bin
German + French	1.12GF	1.17+	WPT0112GF.bin
German Only	1.12G	1.17+	WPT0112G.bin
English + Italian	1.12AI	1.17+	WPT0112AI.bin
Italian Only	1.12I	1.17+	WPT0112I.bin

NOTE: THE TYPICAL SIZE PER UNZIPPED BIN FILE IS 25MB – 30MB+/–

The Simpsons™ Kooky Carnival Redemption (Note 9)

Boot B-02 (8M) **965-BOOT-SAM** **1.04** | $7E62 **U9** *960-5016-00 unprogrammed*

Memory Stick 128MB (970-0128-00)	Version	Bin Files:
English Only	1.05	SKC0105.bin
English New Jersey Only	0.09NJ	SKC0090NJ.bin

NOTE: THE TYPICAL SIZE PER UNZIPPED BIN FILE IS 5.5MB +/–

©Disney's Pirates of the Caribbean Pinball (POTC) (Notes 7, 9)

Boot B-02 (8M) **965-BOOT-SAM** **1.06** | $2014 **U9** *960-5016-00 unprogrammed*

Memory Stick 128MB (970-0128-00)	Version	System	Bin Files:
English + Spanish	1.15AS	1.17+	POTC115AS.bin
English + French	1.15AF	1.17+	POTC115AF.bin
German + French	1.15GF	1.17+	POTC115GF.bin
English + Italian	1.15AI	1.17+	POTC115AI.bin

NOTE: THE TYPICAL SIZE PER UNZIPPED BIN FILE IS 25MB – 30MB+/–

Family Guy™ Pinball (FG) (Notes 7, 9)

Boot B-02 (8M) **965-BOOT-SAM** **2.09** | $10A3 **U9** *960-5016-00 unprogrammed*

Memory Stick 128MB (970-0128-00)	Version	System	Bin Files:
English + Spanish	10.00AL	1.23+	FG1000AL.bin
English + French	10.00AF	1.23+	FG1000AF.bin
English + German	10.00AG	1.23+	FG1000GF.bin
English + Italian	10.00AI	1.23+	FG1000AI.bin

NOTE: THE TYPICAL SIZE PER UNZIPPED BIN FILE IS 25MB – 30MB+/–

Spider-Man™ Pinball (S-M) (Notes 7, 9)

Boot B-02 (8M) **965-BOOT-SAM** **2.10** | $F625 **U9** *960-5016-00 unprogrammed*

Memory Stick 128MB (970-0128-00)	Version	System	Bin Files:
English + Spanish	1.3ES	1.27+	spd_1_30_es.bin
English + French	1.3EF	1.27+	spd_1_30_ef.bin
German+French	1.3GF	1.27+	spd_1_30_gf.bin
English + Italian	1.3EI	1.27+	spd_1_30_ei.bin

NOTE: THE TYPICAL SIZE PER UNZIPPED BIN FILE IS 25MB – 30MB+/–

footnotes:

1 ROMs on CPU/Sound Bd.: 520-5136-**00** (Stereo) & Display Cont. Bd.: 520-5055-01
2 ROMs on CPU/Sound Bd.: 520-5136-**10** (Mono) & Display Cont. Bd.: 520-5055-01
3 ROMs on CPU/Sound Board: 520-5136-**15*** (Mono) (*FCC 11-97) &
Display Controller Board: 520-5055-**02*** (*FCC 11-97)

APPENDIX A

Pinball Game Firmware Table

EPROM	Chip Size	Program Part №	USA Ver.	Bd. Loc.	Raw Part №
Laser War					
CPU	(256K)	965-0004-00	LWAR.C5	C5	960-5007-00
Sound (Old)	(256K)	965-0005-00		J5	960-5007-00
Sound (Old)	(256K)	965-0006-00		J6	960-5007-00
Sound (Old)	(256K)	965-0007-00		J7	960-5007-00
			- OR -		
Sound	(256K)	965-0008-00		7F	960-5007-00
Sound 1	(512K)	965-0009-00		6F	960-7001-02
Sound 2	(512K)	965-0010-00		4F	960-7001-02
Secret Service					
CPU	(256K)	965-0011-00	A4-6	B5	960-5007-00
CPU	(256K)	965-0012-00	A4-6	C5	960-5007-00
Voice 1	(512K)	965-0014-00		6F	960-7001-02
Voice 2	(512K)	965-0015-00		4F	960-7001-02
Sound	(256K)	965-0013-00		7F	960-5007-00
Torpedo Alley					
CPU	(256K)	965-0016-00	A2-1	B5	960-5007-00
CPU	(256K)	965-0017-00	A2-1	C5	960-5007-00
Voice 1	(512K)	965-0019-00		6F	960-7001-02
Voice 2	(512K)	965-0020-00		4F	960-7001-02
Sound	(256K)	965-0018-00		7F	960-5007-00
Time Machine					
CPU	(128K)	965-0021-00	A2-4	B5	960-5006-00
CPU	(256K)	965-0022-00	A2-4	C5	960-5007-00
Voice 1	(512K)	965-0024-00		6F	960-7001-02
Voice 2	(512K)	965-0025-00		4F	960-7001-02
Sound	(256K)	965-0023-00		7F	960-5007-00
Playboy 35th Anniversary					
CPU	(256K)	965-0046-00	A2-4	B5	960-5007-00
CPU	(256K)	965-0047-00	A2-4	C5	960-5007-00
Voice 1	(512K)	965-0049-00		6F	960-7001-02
Voice 2	(512K)	965-0050-00		4F	960-7001-02
Sound	(256K)	965-0048-00		7F	960-5007-00
ABC Monday Night Football					
CPU	(128K)	965-0031-00	A2-7	B5	960-5006-00
CPU	(256K)	965-0032-00	A2-7	C5	960-5007-00
Voice 1	(512K)	965-0034-00		6F	960-7001-02
Voice 2	(512K)	965-0035-00		4F	960-7001-02
Sound	(256K)	965-0033-00		7F	960-5007-00
Robocop					
CPU	(256K)	965-0036-00	A3-4	B5	960-5007-00
CPU	(256K)	965-0037-00	A3-4	C5	960-5007-00
Voice 1	(512K)	965-0039-00		6F	960-7001-02
Voice 2	(512K)	965-0040-00		4F	960-7001-02
Sound	(256K)	965-0038-00		7F	960-5007-00
Phantom of the Opera					
CPU	(128K)	965-0026-00	A3-2	B5	960-5006-00
CPU	(256K)	965-0027-00	A3-2	C5	960-5007-00
Voice 1	(512K)	965-0029-00		6F	960-7001-02
Voice 2	(512K)	965-0030-00		4F	960-7001-02
Sound	(256K)	965-0028-00		7F	960-5007-00
Back to the Future					
CPU	(256K)	965-0041-00	A2-0	B5	960-5007-00
CPU	(256K)	965-0042-00	A2-0	C5	960-5007-00
Voice 1	(512K)	965-0044-00		6F	960-7001-02
Voice 2	(512K)	965-0045-00		4F	960-7001-02
Sound	(256K)	965-0043-00		7F	960-5007-00
The Simpsons					
CPU	(128K)	965-0051-00	A2-7	B5	960-5006-00
CPU	(256K)	965-0052-00	A2-7	C5	960-5007-00
Voice 1	(512K)	965-0054-00		6F	960-7001-02
Voice 2	(512K)	965-0055-00		4F	960-7001-02
Sound	(256K)	965-0053-00		7F	960-5007-00
Checkpoint					
CPU	(128K)	965-0056-00	A1-7	B5	960-5006-00
CPU	(256K)	965-0134-00	A1-7	C5	960-5007-00
Voice 1	(1M)	965-0057-00		F7	960-5009-00
Voice 2	(1M)	965-0058-00		F5	960-5009-00
Sound	(256K)	965-0059-00		F4	960-5007-00
Display	(512K)	965-0060-00	CP80	U8	960-7001-02
Teenage Mutant Ninja Turtles					
CPU	(128K)	965-0061-00	A1.04	B5	960-5006-00
CPU	(256K)	965-0062-00	A1.04	C5	960-5007-00
Voice 1	(1M)	965-0063-00		F5/6	960-5009-00
Voice 2	(1M)	965-0064-00		F4/5	960-5009-00
Sound	(256K)	965-0065-00		F7	960-5007-00
Display	(512K)	965-0066-00	A1.04	U8	960-7001-02
Batman					
CPU	(128K)	965-0067-00	A1.06	B5	960-5006-00
CPU	(256K)	965-0135-00	A1.06	C5	960-5007-00
Voice 1	(2M)	965-0068-00		U17	960-5010-00
Voice 2	(1M)	965-0069-00		U21	960-5009-00
Sound	(256K)	965-0070-00		U7	960-5007-00
Display	(1M)	965-0071-00	A1.06	U8	960-5009-00
Star Trek 25th Anniversary					
CPU	(512K)	965-0072-00	A2.01	C5	960-7001-02
Voice 1	(2M)	965-0073-00		U17	960-5010-00
Voice 2	(2M)	965-0074-00		U21	960-5010-00
Sound	(256K)	965-0075-00		U7	960-5007-00
Display	(1M)	965-0076-00	A1.09	U8	960-5009-00
Hook					
CPU	(512K)	965-0077-00	A4.08	C5	960-7001-02
Voice 1	(2M)	965-0078-00		U17	960-5010-00
Voice 2	(2M)	965-0079-00		U21	960-5010-00
Sound	(256K)	965-0080-00		U7	960-5007-00
Display	(1M)	965-0081-00	A4.01	U8	960-5009-00
Lethal Weapon 3					
CPU	(512K)	965-0082-00	A2.08	C5	960-7001-02
Voice 1	(2M)	965-0083-00		U17	960-5010-00
Voice 2	(2M)	965-0084-00		U21	960-5010-00
Sound	(256K)	965-0085-00		U7	960-5007-00
Display	(2M)	965-0086-00	A2.06	ROM 0	960-5010-00
Display	(2M)	965-0087-00	A2.06	ROM 1	960-5010-00
	(Used on Display PCB 520-5055-00)				
			-OR-		
Display	(4M)	965-0087-04	A2.06	ROM 0	960-5015-00
	(Used on Display PCB 520-5055-01)				
Star Wars					
CPU	(512K)	965-0119-00	A1.03	C5	960-7001-02
Voice 0	(4M)	965-0132-00		U17	960-5015-00
Voice 1	(2M)	965-0133-00		U21	960-5010-00
Sound	(256K)	965-0131-00		U7	960-5007-00
Display	(2M)	965-0120-00	A1.04	ROM 0	960-5010-00
Display	(2M)	965-0121-00	A1.04	ROM 1	960-5010-00
	(Used on Display PCB 520-5055-00)				
			-OR-		
Display	(4M)	965-0122-00	A1.05	ROM 0	960-5015-00
	(Used on Display PCB 520-5055-01)				
Rocky & Bullwinkle & Friends					
CPU	(512K)	965-0138-00	A1.30	C5	960-7001-02
Voice 0	(4M)	965-0139-00		U17	960-5015-00
Voice 1	(2M)	965-0140-00		U21	960-5010-00
Sound	(256K)	965-0141-00		U7	960-5007-00
Display	(4M)	965-0142-00	A1.30	ROM 0	960-5015-00
Jurassic Park					
CPU	(512K)	965-0143-00	A5.13	C5	960-7001-02
Voice 0	(4M)	965-0144-00		U17	960-5015-00
Voice 1	(2M)	965-0145-00		U21	960-5010-00
Sound	(256K)	965-0146-00		U7	960-5007-00
Display	(4M)	965-0147-00	A5.10	ROM 0	960-5015-00
Last Action Hero					
CPU	(512K)	965-0148-00	A1.12	C5	960-7001-02
Voice 0	(4M)	965-0149-00		U17	960-5015-00
Voice 1	(2M)	965-0150-00		U21	960-5010-00
Sound	(256K)	965-0151-00		U7	960-5007-00
Display	(4M)	965-0152-00	A1.06	ROM 0	960-5015-00
Tales from the Crypt					
CPU	(512K)	965-0157-00	A3.03	C5	960-7001-02
Voice 0	(4M)	965-0158-00		U17	960-5015-00
Voice 1	(2M)	965-0159-00		U21	960-5010-00
Sound	(256K)	965-0160-00		U7	960-5007-00
Display	(4M)	965-0161-00	A3.01	ROM 0	960-5015-00
The Who's Tommy					
CPU	(512K)	965-0162-00	A4.00	C5	960-7001-02
Voice 1	(4M)	965-0165-00		U17	960-5015-00
Voice 2	(4M)	965-0166-00		U21	960-5015-00
Voice 3	(4M)	965-0167-00		U36	960-5015-00
Voice 4	(4M)	965-0168-00		U37	960-5015-00
Sound	(512K)	965-0164-00		U7	960-7001-02
Display	(4M)	965-0163-00	A4.00	ROM 0	960-5015-00
WWF Royal Rumble					
CPU	(512K)	965-0169-00	A1.06	C5	960-7001-02
Voice 1	(4M)	965-0172-00		U17	960-5015-00
Voice 2	(4M)	965-0173-00		U21	960-5015-00
Voice 3	(4M)	965-0174-00		U36	960-5015-00
Sound	(512K)	965-0171-00		U7	960-7001-02
Display	(4M)	965-0170-00	A1.02	ROM 0	960-5015-00
Guns N' Roses					
CPU	(512K)	965-0175-00	A3.00	C5	960-7001-02
Voice 1	(4M)	965-0178-00		U17	960-5015-00
Voice 2	(4M)	965-0179-00		U21	960-5015-00
Voice 3	(4M)	965-0180-00		U36	960-5015-00
Voice 4	(4M)	965-0181-00		U37	960-5015-00
Sound	(512K)	965-0177-00		U7	960-7001-02
Display	(4M)	965-0176-00	A3.00	ROM 0	960-5015-00
Maverick *					
CPU	(512K)	965-0182-00	A4.04	C5	960-7001-02
Voice 1	(4M)	965-0186-00		U17	960-5015-00
Voice 2	(4M)	965-0187-00		U21	960-5015-00
Voice 3	(4M)	965-0187-01		U36	960-5015-00
Sound	(512K)	965-0185-00		U7	960-7001-02
Display*	(4M)	965-0183-00	A4.01	ROM 0	960-5015-00
Display*	(4M)	965-0184-00	A4.01	ROM 3	960-5015-00
Mary Shelley's Frankenstein *					
CPU	(512K)	965-0188-00	A1.03	C5	960-7001-02
Voice 1	(4M)	965-0192-00		U17	960-5015-00
Voice 2	(4M)	965-0193-00		U21	960-5015-00
Voice 3	(4M)	965-0194-00		U36	960-5015-00
Sound	(512K)	965-0191-00		U7	960-7001-02
Display*	(4M)	965-0189-00	A1.03	ROM 0	960-5015-00
Display*	(4M)	965-0190-00	A1.03	ROM 3	960-5015-00
Baywatch *	(CPU Board 520-5003-04)				
CPU	(512K)	965-0195-00	A4.00	C5	960-7001-02
Voice 1	(4M)	965-0196-00		U17	960-5015-00
Voice 2	(4M)	965-0197-00		U21	960-5015-00
Sound	(512K)	965-0199-00		U7	960-7001-02
Display*	(4M)	965-0200-00	A4.00	ROM 0	960-5015-00
Display*	(4M)	965-0201-00	A4.00	ROM 3	960-5015-00
Batman Forever *	(CPU Board 520-5003-04)				
CPU	(512K)	965-0202-00	A3.02	C5	960-7001-02
Voice 1	(4M)	965-0203-00		U17	960-5015-00
Voice 2	(4M)	965-0204-00		U21	960-5015-00
Sound	(512K)	965-0205-00		U7	960-7001-02
Display*	(4M)	965-0206-00	A3.00	ROM 0	960-5015-00
Display*	(4M)	965-0207-00	A3.00	ROM 3	960-5015-00

* ***Note:*** *Display* ***EPROMS (4M)*** *for* ***Maverick*** *thru* ***Batman Forever*** *require an access time of* ***120 Nsec*** *or faster.*

APPENDIX B

Semi-Conductors / Integrated Circuits (I.C.) / Relays Cross-Reference Table

Table №	Type	Source Number	STERN® PINBALL	N T E®	E C G®	Radio Shack®	R C A®
	RECTIFICATION, BLOCKING, DAMPENING DIODES AND/OR LIGHT EMITTING DIODES (LEDs)						
1	Diode	1N4001	112-5001-00	NTE552	ECG552	- — - — -	SK9000
	Diode	1N4004	112-5003-00	NTE116	ECG116	276-1103	SK3312
	Diode	1N5401	112-0056-00	NTE5801	ECG5801	276-1143	SK9004
	Diode	1N5404	112-5004-00	NTE5804	ECG5804	276-1144	SK9007
	Diode	T6A10L	112-5006-01	NTE5812	ECG5812	- — - — -	- — - — -
	Diode	FR302	112-5009-00	NTE588	ECG588	- — - — -	SK5014
	Diode, Signal	1N914	112-5014-00	- — - — -	- — - — -	- — - — -	- — - — -
	LED	**MT5000UR** or **TLRH180P** (T1-3/4 GaAlAs)	165-5052-00 *(old SPI Part №: 165-5100-00)*	- — - — -	- — - — -	276-066B	- — - — -
	ZENER DIODES						
2	Diode	1N4742A 12v	112-0061-00	NTE142A	ECG142A	276-563	SK12V
	Diode	1N4760B 68v	112-0062-00B	NTE5092A	ECG5092A	- — - — -	SK68V
	Diode	1N4764A 100v	112-0049-00A	NTE5096A	ECG5096A	- — - — -	SK100V
	Diode	1N5228 3.9v	112-0053-00	NTE5007A	ECG5007A	- — - — -	SK3A9
	Diode	1N5234B 6.2v	112-0047-00B	NTE5013A	ECG5013A	276-561	SK6A2
	Diode	1N5379 110v	112-0072-00	NTE5157	ECG5157	- — - — -	SK110X
	Diode	1N6267A 6.8v	112-5011-00	NTE4902	ECG4902	- — - — -	- — - — -
	Diode	1N4752A 33v	112-5010-00A	NTE147A	ECG147A	- — - — -	SK33V
	Diode	1N4736 6.8v 1w	112-5007-00	NTE5071A	ECG5071A	- — - — -	- — - — -
	TRANSISTORS - TYPE FET, NPN, PNP AND/OR SCR						
3	FET Trans.	STP20N10L	110-0106-00	NTE2987	ECG2987	- — - — -	- — - — -
	FET Trans.	STP19N06L	110-0088-00	NTE2985	ECG2985	- — - — -	- — - — -
	FET Trans.	VN02N	110-0089-00	- — - — -	- — - — -	- — - — -	- — - — -
	NPN Trans.	2N4401	110-0073-00	NTE85	ECG85	276-2009	SK3124A
	NPN Trans.	2N6427	110-0070-00	NTE48	ECG48	- — - — -	SK4906
	NPN Trans.	MJE340	110-0071-00	NTE157	ECG157	- — - — -	SK3747
	NPN Trans.	MPSA42	110-0082-00	NTE287	ECG287	- — - — -	SK3232
	NPN Trans.	2N3904	110-0069-00	NTE123AP	ECG123AP	276-2009	- — - — -
	NPN Trans.	TIP122	110-0067-00	NTE261	ECG261	276-2068	SK3896
	NPN Trans.	MJE15030	110-0101-00	NTE375	ECG375	- — - — -	SK9118
	PNP Trans.	2N5401	110-0078-00	NTE288	ECG288	- — - — -	SK3434
	PNP Trans.	MJE15031	110-0103-00	NTE292	ECG292	- — - — -	SK3441
	PNP Trans.	MJE350	110-0072-00	NTE374	ECG374	- — - — -	SK9042
	PNP Trans.	MPSA92	110-0100-00	NTE288	ECG278	- — - — -	SK3434
	PNP Trans.	TIP42	110-0068-00	NTE332	ECG332	- — - — -	SK9236
	PNP Trans.	TIP32C	110-0081-00	NTE292	ECG292	- — - — -	SK3441
	PNP Trans.	TIP36C	110-0077-00	NTE393	ECG393	- — - — -	SK3961
	SCR Trans.	2N5060	110-0074-00	NTE5400	ECG5400	276-1067	SK3950
	SCR Trans.	SCR2800B	110-0083-00	NTE5461-8	ECG5461-8	- — - — -	- — - — -
	BRIDGE RECTIFIERS (BR)			**Comments:**			
4	BR (Present)	DB3501 or CM3501	112-5000-00	For White Star I/O Bds., BR = 35 Amp @ 100v P.I.V.			
	RELAYS			**Comments:**			
5	Relay	FRL-264 D024/02CK	190-5002-00	For PPB, Power Supply, & White Star I/O Boards, Relay = 24v DC 10 Amp DPDT			
	Relay	FRL-264 D006/04CV	190-5001-00	For CPU Boards, Relay = 6v DC 5 Amp 4 Pole DT			

APPENDIX C

Production Start Date, Manual Part Nº, ROM Size & Positions and Jumper W6 Installed Note‡ (White Star Board System & S.A.M. System Only*)

	Game Name White Star Bd. System™	Production Start Date and Manual Part Nr.	CPU/Sound Board **Sound U7 512K** CPU/Sound Board **Game U210 1MB** CPU/Sound Board **Voice ROMS:** U17	U21	U36	U37	Jumper Installed (‡ see Note)
*** Note:**	*For complete Appendix Information for Games **Laser War** through **Batman Forever**, see any Service Game Manual between **Apollo 13** through **Ripley's Believe It or Not!** or on-line at our website www.sternpinball.com/parts.htm; also available on CD-R, 970-2003-00 (**The Simpsons™ Pinball Party**, **T3®** and **The Lord of the Rings™**).*						
29	Apollo 13 (A13)	NOV 95 780-5044-00	4MB	4MB	4MB	Not Used	n / a
30	Golden Eye	FEB 96 780-5042-00	4MB	4MB	Not Used	Not Used	n / a
31	Twister	APR 96 780-5041-00	4MB	4MB	Not Used	Not Used	n / a
32	ID4: Independence Day	JUL 96 780-5045-00	4MB	4MB	Not Used	Not Used	n / a
33	Space Jam	OCT 96 780-5043-00	4MB	4MB	4MB	Not Used	n / a
34	The Star Wars Trilogy - Sp. Ed.	FEB 97 780-5056-00	4MB	4MB	Not Used	Not Used	n / a
35	The Lost World: Jurassic Park	JUN 97 780-5053-00	4MB	4MB	Not Used	Not Used	n / a
36	The X-Files	AUG 97 780-5046-00	4MB	4MB	Not Used	Not Used	n / a
37	Starship Troopers	NOV 97 780-5059-00	4MB	4MB	4MB	Not Used	n / a
38	Viper Night Drivin'	FEB 98 780-5035-00	4MB	4MB	4MB	4MB	n / a
39	Lost In Space	JUN 98 780-5060-00	4MB	4MB	4MB	4MB	n / a
40	Godzilla	SEP 98 780-5040-00	4MB	4MB	4MB	4MB	n / a
41	South Park	JAN 99 780-5071-00	8MB	8MB	8MB	8MB	W6
42 a	Harley-Davidson®	AUG 99 780-5067-01	8MB	8MB	8MB	8MB	W6
42 b	Harley-Davidson®2nd Ed.	SEP 02 780-5067-10	8MB	8MB	8MB	8MB	W6
42 c	Harley-Davidson® 3rd Ed.	OCT 04 780-5087-00	8MB	8MB	8MB	8MB	W6
43 a	Striker Xtreme	MAR 00 780-5068-01	8MB	8MB	8MB	8MB	W6
43 b	NFL	OCT 00 780-5073-00	8MB	8MB	8MB	8MB	W6
44	Sharkey's Shootout	JUL/OCT 00 780-5072-01	8MB	8MB	8MB	Not Used	W6
45	High Roller Casino	JAN 01 780-5065-00	8MB	8MB	8MB	8MB	W6
46	Austin Powers™	MAY 01 780-5074-00	8MB	8MB	8MB	8MB	W6
47	MONOPOLY®	SEP 01 780-5075-00	8MB	8MB	8MB	Not Used	W6
48	Playboy	FEB 02 780-5076-00	8MB	8MB	8MB	8MB	W6
49	RollerCoaster Tycoon™	AUG 02 780-5078-00	8MB	8MB	8MB	Not Used	W6
50	The Simpsons™ Pinball Party	JAN 03 780-5077-00	8MB	8MB	8MB	8MB	W6
51	T3®: Rise of the Machines™	MAY 03 780-5079-00	8MB	8MB	8MB	8MB	W6
52	The Lord of the Rings™	NOV 03 780-5080-00	8MB	8MB	8MB	8MB	
53	Ripley's Believe It or Not!®	APR 04 780-5081-00	8MB	8MB	8MB	8MB	

‡ *Additional Information for **Installed** Jumper (above games 41-51):*

- *Installed **W6** so 8MB ROMS can be utilized. See the **CPU/Sound Board Schematic** (Sheet 2 of 3, Address Location 3E) in the games' Service Game Manual. Games 52 - 57 CPU/Sound Board differ than <51 (See Appendix D).*

See **Apdx. A** for more detailed information on **Pinball Game Firmware** *(ROM Name, Size, Part Numbers, USA Version & Checksum and Board Locations).*

	Game Name White Star Board System™	Production Start Date and Manual Part Nr.	CPU/Sound Board **Sound U7 512K** CPU/Sound Board **Game U210 1MB** CPU/Sound Board **Voice ROMS:** U17	U21	U36	U37
54	Elvis®	AUG 04 780-5084-00	8MB	8MB	8MB	8MB
55	The Sopranos℠	FEB 05 780-5085-00	8MB	8MB	8MB	8MB
56	NASCAR®	JUL 05 780-5086-00	8MB	8MB	8MB	8MB
57	Grand Prix	SEP 05 780-5091-00	8MB	8MB	8MB	8MB

See **Apdx. A** for more detailed information on **Pinball Game Firmware** *(ROM Name, Size, Part Numbers, USA Version & Checksum and Board Locations).*

	Game Name S.A.M. System	Production Start Date and Manual Part Nr.	S.A.M. System CPU/Sound Board Boot EPROM **U9** 965-BOOT-SAM *(Programmed)*			
58	World Poker Tour™ (WPT)	JUN 06 780-5088-00	8MB	B-02 V2.1+	chksum $F625	LOC: U9
59	The Simpsons™ Kooky Carnival	APR 06 780-5090-00	8MB	B-02 V2.1+	chksum $F625	LOC: U9
60	©Disney's Pirates of the Caribbean	AUG 06 780-5092-00	8MB	B-02 V2.1+	chksum $F625	LOC: U9
61	Famil Guy™	DEC 06 780-5093-00	8MB	B-02 V2.1+	chksum $F625	LOC: U9
62	Spider-Man™	MAY 07 780-5094-00	8MB	B-02 V2.1+	chksum $F625	LOC: U9

Games 58 – current, S.A.M. System : CPU/Sound & I/O Power Driver PCBs differ than White Star *(previous Games 29 – 57)*; Disp. Controller Not Required.

APPENDIX D

Board Type (White Star Board System* Only) Table

Game Name	Flipper	I/O Power Driver	CPU/Sound Stereo	Disp. Power Supply	Dot Matrix Display	Display Controller	OPTO Transmitter	OPTO Receiver	OPTO Application
Apollo 13	520-5080-00 2-Flipper	520-5137-00	520-5136-00	520-5138-00	520-5052-00 128 X 32 Dots	520-5055-01	520-5124-00 Single OPTO	520-5125-00 Single OPTO	5-Ball Trough over Up-Kicker
	Miscellaneous PC Boards:	Light Boards 520-5130-01, -04 & -05 Magnet Interface, 7-Segment Display & Light Bd. 520-5130-06 Magnet Driver Board 520-5130-02 Switch Membrane Board 520-5130-03				Relay Board 520-5010-00			
Golden Eye	520-5080-00 2-Flipper	520-5137-00	520-5136-00	520-5138-00	520-5052-00 128 X 32 Dots	520-5055-01	520-5124-00 Single OPTO	520-5125-00 Single OPTO	5-Ball Trough over Up-Kicker
	Miscellaneous PC Boards:	Light Boards 520-5128-05 through -08		Mag. Processor X2 Driver Bd. 520-5143-00		Relay Board 520-5010-00			

GAMES HEREON NO LONGER REQUIRE THE FLIPPER BOARD WITH THE WHITE STAR BOARD SYSTEM™

Game Name	I/O Power Driver	CPU/Sound Mono	Disp. Power Supply	Dot Matrix Display	Display Controller	OPTO Transmitter	OPTO Receiver	OPTO Application	Misc OPTO & App.
Twister	520-5137-01	520-5136-10	520-5138-00	520-5052-00 128 X 32 Dots	520-5055-01	520-5124-00 Single OPTO	520-5125-00 Single OPTO	5-Ball Trough over Up-Kicker	
	Miscellaneous PC Boards:	Light Boards 520-5145-01 through -07		Mag. Drv. Bd. 520-5143-00	Relay Board 520-5010-00				
Independence Day (ID4)	520-5137-01	520-5136-10	520-5138-00	520-5052-00 128 X 32 Dots	520-5055-01	520-5124-00 Single OPTO	520-5125-00 Single OPTO	4-Ball Trough over Up-Kicker	
	Miscellaneous PC Boards:	Light Boards 520-5149-01 through -10		Servo Mtr. Bd. 520-5152-00		520-5082-00 Long Hop OPTO	520-5083-00 Long Hop OPTO	Alien Head Enter	
Space Jam	520-5137-01	520-5136-10	520-5138-00	520-5052-00 128 X 32 Dots	520-5055-01	520-5124-00 Single OPTO	520-5125-00 Single OPTO	5-Ball Trough over Up-Kicker	
	Miscellaneous PC Boards:	2X 7-Segment Display Board 520-5153-00							
The Star Wars Trilolgy - Special Ed.	520-5137-01	520-5136-10	520-5138-00	520-5052-00 128 X 32 Dots	520-5055-01	520-5124-00 Single OPTO	520-5125-00 Single OPTO	4-Ball Trough over Up-Kicker	
	Miscellaneous PC Boards:	Relay Board 520-5010-00							
The Lost World: J.P.	520-5137-01	520-5136-10	520-5138-00	520-5052-00 128 X 32 Dots	520-5055-01	520-5124-00 Single OPTO	520-5125-00 Single OPTO	4-Ball Trough over Up-Kicker	520-5162-00 2-Pos. Motor Sensor on Snagger Motor
	MiscellaneousPC Boards:	DC Relay Bd. 520-5066-00	Shaker Mtr. Bd. 520-5065-00						
The X-Files	520-5137-01	520-5136-10	520-5138-00	520-5052-00 128 X 32 Dots	520-5055-01	520-5124-00 Single OPTO	520-5125-00 Single OPTO	4-Ball Trough over Up-Kicker	520-5155-00 3-Pos. Motor Sensor on File Cab. Motor
	Miscellaneous PC Boards:					520-5082-00 Long Hop OPTO	520-5083-00 Long Hop OPTO	File Cabinet Enter	
Starship Troopers	520-5137-01	520-5136-15	520-5138-00	520-5052-00 128 X 32 Dots	520-5055-02	520-5124-00 Single OPTO	520-5125-00 Single OPTO	4-Ball Trough over Up-Kicker	
	Miscellaneous PC Boards:	4X 7-Segment Display Board 520-5166-00				520-5082-00 Long Hop OPTO	520-5083-01 Long Hop OPTO	L/R Orbit Lane Enter	
Viper Night Drivin'	520-5137-01	520-5136-16	520-5138-00	520-5052-00 128 X 32 Dots	520-5055-03	520-5124-00 Single OPTO	520-5125-00 Single OPTO	4-Ball Trough over Up-Kicker	
	Miscellaneous PC Boards:	Relay Board 520-5010-00				520-5082-00 Long Hop OPTO	520-5083-01 Long Hop OPTO	Jump Ramp	
Lost In Space	520-5137-01	520-5136-16	520-5138-00	520-5052-00 128 X 32 Dots	520-5055-03	515-0173-00 Dual OPTO	515-0174-00 Dual OPTO	4-Ball Trough over Up-Kicker	
	Miscellaneous PC Boards:	Relay Board 520-5010-00							
Godzilla	520-5137-01	520-5136-16	520-5138-00	520-5052-00 128 X 32 Dots	520-5055-03	515-0173-00 Dual OPTO	515-0174-00 Dual OPTO	4-Ball Trough over Up-Kicker	
	Miscellaneous PC Boards:	Shaker Mtr. Bd. 520-5065-00							
South Park	520-5137-01	520-5136-16	520-5138-00	520-5052-00 128 X 32 Dots	520-5055-03	515-0173-00 Dual OPTO	515-0174-00 Dual OPTO	5-Ball Trough over Up-Kicker	
	Miscellaneous PC Boards:					520-5082-00 Long Hop OPTO	520-5083-01 Long Hop OPTO	Kenny Under Trough Enter	
Harley-Davidson® 1st-3rd* Editions	520-5137-01	520-5136-16 *520-5300-00*	520-5138-00	520-5052-00 128 X 32 Dots	520-5055-03	515-0173-00 Dual OPTO	515-0174-00 Dual OPTO	4-Ball Trough over Up-Kicker	
	Miscellaneous PC Boards:	Relay Board 520-5010-00	Shaker Mtr. Bd. 520-5065-00	Diode Board 520-5146-00		520-5082-00 Long Hop OPTO	520-5083-01 Long Hop OPTO	Motorcycle Enter	
Striker Xtreme (NFL)	520-5137-01	520-5136-16	520-5138-00	520-5052-00 128 X 32 Dots	520-5055-03	515-0173-00 Dual OPTO	515-0174-00 Dual OPTO	4-Ball Trough over Up-Kicker	520-5155-00 3-Pos. Motor Sensor on Goalie Motor
	Miscellaneous PC Boards:	DC Relay Bd. 520-5066-00	Relay Board 520-5010-00	Diode Board 520-5146-00	for UK ONLY> Solenoid Expander Bd. 520-5192-00	520-5082-00 Long Hop OPTO	520-5083-01 Long Hop OPTO	Goalie Under-Trough Enter	
Sharkey's Shootout	520-5137-64	520-5136-64	520-5138-00	520-5052-00 128 X 32 Dots	520-5055-03	515-0173-00 Dual OPTO	515-0174-00 Dual OPTO	4-Ball Trough over Up-Kicker	520-5194-00 4-Pos. Motor Sensor on ?-Ball Motor
	MiscellaneousPC Boards:	Relay Board 520-5010-00	Sol. Exp. Bd. 520-5192-00						
High Roller Casino	520-5137-01	520-5136-16	520-5138-00	520-5052-00 128 X 32 Dots	520-5055-03	515-0173-00 Dual OPTO	515-0174-00 Dual OPTO	4-Ball Trough over Up-Kicker	520-5194-00 4-Pos. Motor Sensor on Roulette Wheel Motor
						520-5082-00 Long Hop OPTO	520-5083-01 Long Hop OPTO	Ball Lock under Roulette	
	Miscellaneous PC Boards:	Dot Display (5X7) in Slot Mach. 520-5197-00			for UK ONLY> Solenoid Expander Bd. 520-5192-00	520-5196-00 3-Pos. OPTO	520-5195-00 3-Pos. OPTO	Up/Dn Ramp in Slot Mach.	
Austin Powers™	520-5137-01	520-5136-16	520-5138-00	520-5052-00 128 X 32 Dots	520-5055-03	515-0173-00 Dual OPTO	515-0174-00 Dual OPTO	4-Ball Trough over Up-Kicker	520-5212-00 Pulse-Stretcher OPTO on Spini-Me
	MiscellaneousPC Boards:	Relay Bd. (X3) 520-5010-00			for UK ONLY> Solenoid Expander Bd. 520-5192-00	520-5082-00 Long Hop OPTO	520-5083-01 Long Hop OPTO	Time Machine Ramp	
MONOPOLY®	520-5137-01	520-5136-16	520-5138-00	520-5052-00 128 X 32 Dots	520-5055-03	515-0173-00 Dual OPTO	515-0174-00 Dual OPTO	4-Ball Trough over Up-Kicker	
	MiscellaneousPC Boards:	DC Relay Bd. 520-5066-00	Mini-Dot Display (3 by 5X7) 520-5197-00 (Electric C° Sign)		for UK ONLY> Solenoid Expander Bd. 520-5192-00	520-5218-00 4-Pos. OPTO	520-5210-00 4-Pos. OPTO	Bank Door	

Table continued on the next page.

APPENDIX D

Board Type (White Star Board System* & S.A.M. System** Only) Table

Game Name	I/O Power Driver	CPU/Sound (old & new)	Disp. Power Supply	Dot Matrix Display	Display Controller	OPTO Transmitter	OPTO Receiver	OPTO Application	Misc OPTO & App.
Playboy	520-5137-01	520-5136-16	520-5138-00	520-5052-00 128 X 32 Dots	520-5055-03	515-0173-00 Dual OPTO	515-0174-00 Dual OPTO	4-Ball Trough over Up-Kicker	
	Miscellaneous PC Boards:	DC Relay Bd. 520-5066-00	Relay Bd. 520-5010-00		for UK ONLY> Solenoid Expander Bd. 520-5192-00				
RollerCoaster Tycoon™	520-5137-01	520-5136-16	520-5138-00	520-5052-00 128 X 32 Dots	520-5055-03	515-0173-00 Dual OPTO	515-0174-00 Dual OPTO	4-Ball Trough over Up-Kicker	520-5222-00 1-Position Switch Detect on Wheel Spin
	Miscellaneous PC Boards:	DC Relay Bd. 520-5066-00	Mini-Dot Display (3 by 5X7) 520-5221-00 (Ramp Enter Sign)		for UK ONLY> Solenoid Expander Bd. 520-5192-00	520-5082-00 Long Hop OPTO	520-5083-01 Long Hop OPTO	Behind 1-Bank Drop Target	
The Simpsons™ Pinball Party	520-5137-01	520-5136-16	520-5138-00	520-5052-00 128 X 32 Dots	520-5055-03	515-0173-00 Dual OPTO	515-0174-00 Dual OPTO	4-Ball Trough over Up-Kicker	
	Miscellaneous PC Boards:	LED Bd. 520-5219-00	Color Dot Display (4 by 5X7) 520-5225-00 (TV Set)		for UK ONLY ◀◀◀ Aux. Driver Bd. 520-5068-01				
Terminator® 3: Rise of the Machines™	520-5137-01	**520-5136-16**	520-5138-00	520-5052-00 128 X 32 Dots	520-5055-03	515-0173-00 Dual OPTO	515-0174-00 Dual OPTO	4-Ball Trough over Up-Kicker	
	Miscellaneous PC Boards:				for UK ONLY ◀◀◀ Aux. Driver Bd. 520-5068-01	515-7307-00 Single OPTO	515-7308-00 Single OPTO	TXCannon Trough	
The Lord of the Rings™	520-5137-01	***New* 520-5300-00**	520-5138-00	520-5052-00 128 X 32 Dots	520-5055-03	515-0173-00 Dual OPTO	515-0174-00 Dual OPTO	4-Ball Trough over Up-Kicker	500-6746-00 (White Trans.) 500-6747-00 (Black Rec.)
	Miscellaneous PC Boards:	19-LED PCB 520-5242-00	OPTO Transmitter / Receiver Amplifier PCB 520-5239-00		for UK ONLY ◀◀◀ Aux. Driver Bd. 520-5068-01	515-7307-00 Single OPTO	515-7308-00 Single OPTO	Orthanc Tower Trough	
Ripley's Believe It or Not!®	520-5137-01	520-5300-00	520-5138-00	520-5052-00 128 X 32 Dots	520-5055-03	515-0173-00 Dual OPTO	515-0174-00 Dual OPTO	4-Ball Trough over Up-Kicker	500-6775-00 OPTO Trnscvr
	Miscellaneous PC Boards:	520-5236-00 X3 Dot Display	OPTO Transmitter / Receiver Amplifier PCB 520-5239-01		for UK ONLY ◀◀◀ Aux. Driver Bd. 520-5068-01	520-5234-00 3-Pos. OPTO	520-5234-00 3-Pos. OPTO	Vari-Target	520-5235-03 X3 Aux. Drvr
Elvis®	520-5137-01	520-5300-00	520-5138-00	520-5052-00 128 X 32 Dots	520-5055-03	515-0173-00 Dual OPTO	515-0174-00 Dual OPTO	4-Ball Trough over Up-Kicker	
	Miscellaneous PC Boards:				for UK ONLY ◀◀◀ Aux. Driver Bd. 520-5068-01				
The Sopranos℠	520-5137-01	520-5300-00	520-5138-00	520-5052-00 128 X 32 Dots	520-5055-03	515-0173-00 Dual OPTO	515-0174-00 Dual OPTO	4-Ball Trough over Up-Kicker	
	Miscellaneous PC Boards:				for UK ONLY ◀◀◀ Aux. Driver Bd. 520-5068-01				
NASCAR® and [NDSE]	520-5137-01	520-5300-00	520-5138-00	520-5052-00 128 X 32 Dots	520-5055-03	515-0173-00 Dual OPTO	515-0174-00 Dual OPTO	4-Ball Trough over Up-Kicker	500-6775-00 OPTO Trans. (Qty. 16) Switch Detect.
	Miscellaneous PC Boards:	520-5235-03 X3 Aux. Drvr	OPTO Transmitter / Receiver Amplifier PCB 520-5239-01		for UK ONLY ◀◀◀ Aux. Driver Bd. 520-5068-01				
Grand Prix	520-5137-01	520-5300-00	520-5138-00	520-5052-00 128 X 32 Dots	520-5055-03	515-0173-00 Dual OPTO	515-0174-00 Dual OPTO	4-Ball Trough over Up-Kicker	500-6775-00 OPTO Trans. (Qty. 16) Switch Detect.
	Miscellaneous PC Boards:	520-5235-03 X3 Aux. Drvr	OPTO Transmitter / Receiver Amplifier PCB 520-5239-01		for UK ONLY ◀◀◀ Aux. Driver Bd. 520-5068-01				

Game Name	I/O Power Driver**	CPU / Sound**	Disp. Power Supply	Dot Matrix Display	Dual OPTO Transmitter	Dual OPTO Receiver	Dual OPTO Transceiver	OPTO Transceiver Miscellaneous
World Poker Tour™ (WPT)	**520-5249-00** Backbox	**520-5246-00** Backbox	520-5138-00 Backbox	520-5052-00 128 X 32 Dots	515-0173-00 4-Ball Trough	515-0174-00 4-Ball Trough	500-6775-00 4 Switch Pairs (Qty. 8)	520-5251-00 'U' 1/per PCB Jail Bars Up Ace/Hole Mech
	Miscellaneous **PCBs :**	520-5254-00 **50V Step-Up** Drv	520-5250-14 **14LED 5X7 Disp.**	520-5239-01 **OPTO** Amplifier	520-5247-00 Ace/Hole Mech	520-5248-00 Ace/Hole Mech		520-5252-04 'U' 4/per PCB Drop Targets 4- & 8- Banks
The Simpsons™ Kooky Carnival	**520-5249-00** Back Door	**520-5246-00** Back Door	520-5138-00 Cabinet Rear	520-5052-00 128 X 32 Dots			**520-5253-00-ASY** Coin Drop (Qty. 11)	
	Miscellaneous **PCBs :**	515-5742-00 Shaker PCB	500-6700-00 Relay *(incl. Wiring + Conn.)*					
©Disney's Pirates of the Caribbean	**520-5249-00** Backbox	**520-5246-00** Backbox	520-5138-00 Backbox	520-5052-00 128 X 32 Dots	515-0173-00 4-Ball Trough	515-0174-00 4-Ball Trough	500-6775-00 5 Switch Pairs (Qty. 10)	
	Miscellaneous **PCBs :**	520-5239-01 **OPTO Amp. (X3)**	511-5024-03 Relay *(incl. Wiring + Conn.)*					
		520-5238-00 : H-E-A-R-T LED PCB						
Family Guy™	**520-5249-00** Backbox	**520-5246-00** Backbox	520-5138-00 Backbox	520-5052-00 128 X 32 Dots	515-0173-00 4-Ball Trough	515-0174-00 4-Ball Trough	500-6775-00 3 Switch Pairs (Qty. 6)	520-5252-01 'U' 1/per PCB Drop Target 1-Bank
	Miscellaneous **PCBs :**	520-5239-01 **OPTO Amp. (X2)**	520-5261-00 Stepper Motor	511-5042-01 **Trgt. Sensor (X2)**			500-6775-01 1 Switch Pair (Qty. 2)	520-5252-04 'U' 4/per PCB Drop Target 4-Bank
		511-5046-00 : Mini Playfield Lamp PCB						
Spider-Man™	**520-5249-00** Backbox	**520-5246-00** Backbox	520-5138-00 Backbox	520-5052-00 128 X 32 Dots	515-0173-00 4-Ball Trough	515-0174-00 4-Ball Trough	500-6775-00 3 Switch Pairs (Qty. 6)	
	Miscellaneous **PCBs :**	520-5239-01 **OPTO Amp. (X2)**						

APPENDIX D

Board Type Table

Game Name	Flipper	Sound	Power Supply	Display X-Digit
• Laser War	2-Flipper **Board Not Required**	***initial:*** 520-5002-00 ***replaced with:*** 520-5002-02 *520-5002-01 was not used.*	520-5000-00	Master: 520-5004-00 plus: 520-5005-00 (Qty. 2): 7 Digit Alpha/Numeric 520-5006-00 (Qty. 2): 7 Digit Numeric 520-5007-00 (Qty. 1): 4 Digit Numeric
• Secret Service • Torpedo Alley	3-Flipper **Board Not Required**	520-5002-02		520-5014-01 7 Digit Alpha/Numeric Combined
• Time Machine	2-Flipper **Board Not Required**			
• Playboy 35th Anniversary * • ABC Monday Night Football * • *Robocop* • *Phantom of the Opera* • *Back to the Future*	520-5033-00 2-Flipper *(*only for 100 games of Playboy 35th Anniv. & ABC Mon. Night Football)*			520-5030-00 16 Digit Alpha/Numeric Combined
• The Simpsons		520-5002-**03**		

Game Name	Flipper	Sound	Power Supply	Dot Matrix Display	Display Controller	OPTO Transmitter	OPTO Receiver	OPTO Apllication
• Checkpoint • Teenage Mutant Ninja Turtles	520-5033-00 2-Flipper	520-5002-03	520-5047-00	520-5042-00 128 X 16				
• Batman • Star Trek 25th Anniv. • Hook		520-5050-01						
• Lethal Weapon 3			520-5047-01	520-5052-00 128 X 32	520-5055-00			
• Star Wars • Rocky & Bull-winkle & Friends		520-5050-02						
• Jurassic Park	520-5076-00 3-Flipper		520-5047-02					
• Last Action Hero	520-5070-00 2-Flipper	520-5050-03						
• Tales from the Crypt	520-5076-00 3-Flipper				520-5055-01			
• The Who's Tommy		520-5077-00						
• WWF Royal Rumble	**520-5070 / 5080 -00** 4-Flipper (2X2)							
• Guns N' Roses	520-5076-00 3-Flipper							
• Maverick		520-5050-03	520-5047-03	520-5075-00 192 X 64	520-5092-01	520-5102-00 Single OPTO	520-5103-00 Single OPTO	Paddle Boat Wheel Enter
• Mary Shelley's Frankenstein	520-5076-00 3-Flipper	520-5077-00						
• Baywatch	**520-5070 / 5080 -00** 4-Flipper (2X2)	520-5126-02				520-5124-00 Single OPTO	520-5125-00 Single OPTO	5-Ball Trough over Up-Kicker
• Batman Forever	520-5076-00 3-Flipper					520-5124-00 Single OPTO	520-5125-00 Single OPTO	4-Ball Trough over Up-Kicker

Miscellaneous Boards (Lamp Boards & Relay Boards) not listed above can be found in each individual game manual.

APPENDIX E

Flipper Coil (White Star Board System* & S.A.M. System** Only) Table

Typical Coil Diode 1N4004 unless noted otherwise (Diode Top = above lugs next to windings; Diode Below (Bottom) = under lugs opposite of windings).

STANDARD COILS (TYPICAL APPLICATIONS)		
Ga.-Turn	**Res (Ω)**	**SPI Part Number and Comments**
20-400	1.0 Ω	090-5021-*use* : **-00** Diode Top
22-500	1.7 Ω	090-5017-*use* : -00 Diode Top
22-600	2.2 Ω	090-5017-*use* : -0B Diode Below // **-0T** Diode Top
23-700	3.1 Ω	090-5022-*use* : -0B Diode Below // **-0T** Diode Top
23-750	3.4 Ω	090-5019-*use* : -00 Diode Top
23-800	3.6 Ω	090-5001-*use* : -0B Diode Below // **-0T** Diode Top // **-NL** No Lugs 11" Leads // **-ND** No Diode
23-840	4.0 Ω	090-5005-*use* : -00 Diode Top
23.5-765	3.6 Ω	090-5037-*use* : -03 Diode Top
24-900	5.0 Ω	090-5002-*use* : -02 Diode Top // **-10** No Lugs 14" Leads
24-940	5.5 Ω	090-5036-*use* : -0B Diode Below // **-0T** Diode Top *use* **090-5051-01** No Lugs 11" Leads
25-1240	9.3 Ω	090-5034-*use* : -00 Diode Below
26-1200	10.3 Ω	090-5044-*use* : -0B Diode Below // **-0T** Diode Top // **-NL** No Lugs 11" Leads // **-ND** No Diode
27-1300	14.2 Ω	090-5003-*use* : -0T Diode Top
27-1400	14.7 Ω	090-5015-*use* : -00 Diode Below
27-1400		**511-5031-00** *Special App.: No Diode / Lugs + Conn.*
27-1500	16.3 Ω	090-5004-*use* : -0B Diode Below // **-0T** Diode Top
29-2000	33.6 Ω	090-5016-*use* : -00 Diode Top
LARGE, MEDIUM & MINI COILS (MAGNET APPLICATIONS)		
20.5-480	2.9 Ω	090-5064-*use* : -02 No Lugs *or* Core; 14" Leads // Large
22-650	4.3 Ω	090-5042-*use* : -00 No Lugs *or* Core; 6" Leads // Large **-01** No Lugs *or* Core; 12" Leads // Large
24-780	8.0 Ω	090-5061-*use* : -00 No Lugs *or* Core; 6" Lds. // Medium
29-1000	15.2 Ω	090-5059-*use* : -00 Lugs + Diode + Magnet Core // Mini
31-1500	52.0 Ω	090-5054-00 : Straight Lugs + Diode + Mag Core // Mini 090-5055-00 : 90° Lugs + Diode + Magnet Core // Mini

LARGE COILS (FLIPPERS & SPECIAL APPLICATIONS)		
Ga.-Turn	**Res (Ω)**	**SPI Part Number and Comments**
21-900	*call* Ω	090-5020-*use* : **-01** 3-Lugs + 1N4004 & 1N5404 Diodes **-10** Diode Top <BROWN><RED>
22-750 / 30-2600	2.6 Ω 92.0 Ω	090-5011-*use* : **-00 DUAL WND COIL** // 3-Lugs Diode x2
22-900	3.45 Ω	090-5020-*use* : -20T Diode Top <YELLOW> // **-20-ND** No Diode
22-1080	4.2 Ω	090-5032-*use* : -0B D. Below // **-0T** D. Top <YEL-GRN> **-NL** No Diode
23-620 / 30-2600	2.4 Ω 75.0 Ω	090-5006-*use* : -00 **DUAL WND COIL** // 3-Lugs Diode x2
23-700 / 30-2600	3.0 Ω 83.5 Ω	090-5013-*use* : -00 **DUAL WOUND COIL** // Diode Top
23-800 / 30-2600	2.4 Ω 90.5 Ω	090-5012-*use* : -00 **DUAL WOUND COIL** // Diode Top
23-900	4.05 Ω	090-5020-*use* : -30 Diode Top <GREEN>
23-1100	5.1 Ω	090-5030-*use* : -0T Diode Top <ORANGE> **-ND** No Diode
23-1200	7.1 Ω	090-5008-*use* : -00 Diode Top <BLACK>
23-1500	4.4 Ω	090-5062-*use* : -00 Diode Top <BLUE>
24-1570	9.5 Ω	090-5025-*use* : -00 Diode Top <BLUE>
25-1400	*call* Ω	090-5067-*use* : -0T Diode Top <RED>
25-1600	*call* Ω	090-5068-*use* : -0T Diode Top <WHITE>
25-1800	13.8 Ω	090-5041-*use* : -0T Diode Top <BLUE-GREEN>
MINI COILS (RESET / TRIP APPLICATIONS)		
27-950	*call* Ω	090-5046-*use* : -01 Diode Top
28-1050	11.5 Ω	090-5046-*use* : -00 Diode Top
27-880	*call* Ω	500-6976-01 No Lugs *or* Diode + 6" Leads & Conn.
31-590	*call* Ω	090-5010-*use* : -00 Diode Top
32-1250	35.0 Ω	**515-6916-01** : *includes Flap & Screw* <YELLOW>
32-1800	50.2 Ω	090-5031-*use* (515-6110-00) : -0B Diode Below // **-0T** Diode Top *use 515-# to include mounting & armature brackets*
33-1590	59.0 Ω	**515-6916-00** : *includes brackets* <WHITE>

Please Note: *Ohm values may vary **+ / – .03** depending on meter calibration.*

Ordering Note: *Coils typically should not come with Coil Sleeves. **IF A SLEEVE EXISTS**, ensure it is the correct sleeve for the application usage. For the correct Coil Sleeve, refer to the Game Assembly Drawing the coil exists on and order separately.*

Flipper Coil (White Star Board System* Only) Table

GAME NAME	Nº of Flippers	FLIPPERS		FLIPPERS no E.O.S. Switch	
		SPI Nº / GAUGE-TURNS / Color		SPI Nº / GAUGE-TURNS / Color	
		LOWER LEFT	LOWER RIGHT	UPPER LEFT	UPPER RIGHT
Apollo 13	2	090-5032-0T **22-1080 -YEL-GRN-**	SAME	Not Used	Not Used
Golden Eye	2	090-5032-0T **22-1080 -YEL-GRN-**	SAME	Not Used	Not Used
Twister	2	090-5020-20T **22-900 -YELLOW-**	090-5032-0T **22-1080 -YEL-GRN-**	Not Used	Not Used
ID4: Independence Day	3	090-5032-0T **22-1080 -YEL-GRN-**	SAME	Not Used	090-5020-30 **23-900 -GREEN-**
Space Jam †	2	090-5032-0T **22-1080 -YEL-GRN-**	090-5020-20T **22-900 -YELLOW-**	Not Used	Not Used
The Star Wars Trilogy - Special Edition †	2	090-5032-0T **22-1080 -YEL-GRN-**	SAME	Not Used	Not Used
The Lost World: Jurassic Park †	2	090-5032-0T **22-1080 -YEL-GRN-**	SAME	Not Used	Not Used
The X-Files †	2	090-5032-0T **22-1080 -YEL-GRN-**	SAME	Not Used	Not Used
Starship Troopers †	3	090-5030-0T **23-1100 -ORANGE-**	SAME	Not Used	090-5032-0T **22-1080 -YEL-GRN-**
Viper Night Drivin' †	2	090-5030-0T **23-1100 -ORANGE-**	SAME	Not Used	Not Used
Lost In Space †	2	090-5030-0T **23-1100 -ORANGE-**	090-5032-0T **22-1080 -YEL-GRN-**	Not Used	Not Used
Godzilla †	2	090-5032-0T **22-1080 -YEL-GRN-**	SAME	Not Used	Not Used
South Park †	2	090-5030-0T **23-1100 -ORANGE-**	SAME	Not Used	Not Used

**** Note:*** *For complete Appendix Information for Games **Laser War** through **Batman Forever**, see any Service Game Manual between **Apollo 13** through **Ripley's Believe It or Not!**; or order CD-R, 970-2003-00 (**The Simpsons™ Pinball Party**, **Terminator® 3** and **The Lord of the Rings™**).*

† Coil Part Numbers ending with a "**T**" signifies the Diode is on the top of the lug *(on the coil-winding side)*;
Coil Part Numbers ending with a "**B**" signifies the Diode is on the bottom of the lugs.

Table continued on the next page.

APPENDIX E

Flipper Coil (White Star Board System* & S.A.M. System** Only) Table

GAME NAME	Nº of Flippers	FLIPPERS w/E.O.S. Switch SPI Nº / GAUGE-TURNS / Color		FLIPPERS no E.O.S. Switch SPI Nº / GAUGE-TURNS / Color	
		LOWER LEFT	LOWER RIGHT	UPPER LEFT	UPPER RIGHT
Harley-Davidson® † *and 1st through 3rd Editions*	2	090-5032-0T **22-1080 -YEL-GRN-**	090-5030-0T **23-1100 -ORANGE-**	Not Used	Not Used
Striker Xtreme (NFL) †	3	090-5032-0T **22-1080 -YEL-GRN-**	090-5030-0T **23-1100 -ORANGE-**	090-5030-0T **23-1100 -ORANGE-**	Not Used
Sharkey's Shootout †	3	090-5030-0T **23-1100 -ORANGE-**	SAME	090-5030-0T **23-1100 -ORANGE-**	Not Used
High Roller Casino †	2	090-5020-20T **22-900 -YELLOW-**	090-5032-0T **22-1080 -YEL-GRN-**	Not Used	Not Used
Austin Powers™ †	2	090-5020-30 **23-900 -GREEN-**	090-5030-0T **23-1100 -ORANGE-**	Not Used	Not Used
MONOPOLY® †	3	090-5032-0T **22-1080 -YEL-GRN-**	SAME	Not Used	090-5062-0T **23-1500 -BLUE-**
Playboy †	2	090-5030-0T **23-1100 -ORANGE-**	SAME	Not Used	Not Used
RollerCoaster Tycoon™ †	4	090-5032-0T **22-1080 -YEL-GRN-**	SAME	090-5067-0T **25-1400 -RED-**	090-5068-0T **25-1600 -WHITE-**
The Simpsons™ Pinball Party †	6** (5 with Flipper Bats)	090-5032-0T **22-1080 -YEL-GRN-**	SAME	Not Used	090-5030-0T **23-1100 -ORANGE-**
		*** The Homer Head Assembly is affixed to an Upr. Rt. Style Flipper (no E.O.S. Switch):*	** 090-5020-20T **22-900 -YELLOW-**	Flippers (Mini-Bats) on 2nd Level Playfield: 090-5041-00T **25-1800 -BLU-GRN-**	090-5025-00 **24-1570 -BLUE-**
Terminator® 3: Rise of the Machines™ †	2	090-5032-0T **22-1080 -YEL-GRN-**	SAME	Not Used	Not Used
The Lord of the Rings™ †	2	090-5020-20T **22-900 -YELLOW-**	SAME	Not Used	Not Used
Ripley's Believe It or Not!® †	3	090-5032-0T **22-1080 -YEL-GRN-**	SAME	Not Used	090-5067-00T **25-1400 -RED-**
Elvis® †	4	090-5020-20T **22-900 -YELLOW-**	SAME	090-5020-30 **23-900 -GREEN-**	SAME
The Sopranos℠ †	2	090-5032-0T **22-1080 -YEL-GRN-**	SAME	Not Used	Not Used
NASCAR® and [NDSE] †	2	090-5030-0T **23-1100 -ORANGE-**	SAME	Not Used	Not Used
Grand Prix †	2	090-5030-0T **23-1100 -ORANGE-**	SAME	Not Used	Not Used

† Coil Part Numbers ending with a "**T**" signifies the Diode is on the top of the lug *(on the coil-winding side)*; Coil Part Numbers ending with a "**B**" signifies the Diode is on the bottom of the lugs.

** S.A.M. System Games **DO NOT REQUIRE DIODES**. If you use a coil from your stock which has a diode, remove it **ONLY FOR** S.A.M. System Games.

World Poker Tour™ (WPT)**	4	090-5032-ND **22-1080 [NO DIODE]**	SAME	090-5030-ND **23-1100 [NO DIODE]**	SAME
©Disney's Pirates of the Caribbean**	2	090-5030-ND **23-1100 [NO DIODE]**	SAME	Not Used	Not Used
Family Guy™ **	3 Norm.	090-5030-ND **23-1100 [NO DIODE]**	SAME	090-5062-ND **23-1500 [NO DIODE]**	Not Used
	2 Mini	090-5046-01-ND **27-950 [NO DIODE]**	SAME		
Spider-Man™ **	3	090-5032-ND **22-1080 [NO DIODE]**	SAME	Not Used	090-5032-ND **22-1080 [NO DIODE]**

APPENDIX E

Generic Coil Cross-Reference Guide † ‡

Flipper Coil Table ‡ ††

GAME NAME	Nº of Flippers	FLIPPERS w/E.O.S. Switch SPI Nº / GAUGE-TURNS / Color		FLIPPERS no E.O.S. Switch SPI Nº / GAUGE-TURNS / Color	
		LOWER LEFT	LOWER RIGHT	UPPER LEFT	UPPER RIGHT
Laser War ‡	2	090-5011-00 **22-750 / 30-2600**	SAME	Not Used	Not Used
Secret Service ‡	3	090-5006-00 **23-620 / 30-2600**	SAME	Not Used	090-5006-00 **23-620 / 30-2600**
Torpedo Alley ‡	3	090-5011-00 **22-750 / 30-2600**	090-5013-00 **23-700 / 30-2600**	Not Used	090-5012-00 **23-800 / 30-2600**
Time Machine ‡	2	090-5011-00 **22-750 / 30-2600**	SAME	Not Used	Not Used

‡ These coils are dual-wound.

Playboy 35th Anniversary ††	2	090-5020-02 **22-900 -YEL-YEL-**	SAME	Not Used	Not Used
ABC Monday Night Football ††	2	090-5020-02 **22-900 -YEL-YEL-**	SAME	Not Used	Not Used

†† A very small % of these games used a 090-5020-20 coil which used a proto-type Solid State Flipper System. The two types of coils both are 22-900 coils; the only difference is the addition of the 1N5404 Diode on the (-02) coils which was used in the Deger Design.

Robocop	2	090-5020-20 **22-900 -YEL-YEL-**	SAME	Not Used	Not Used
Phantom of the Opera	2	090-5020-20 **22-900 -YEL-YEL-**	SAME	Not Used	Not Used
Back to the Future	2	090-5020-20 **22-900 -YEL-YEL-**	SAME	Not Used	Not Used
The Simpsons	2	090-5020-20 **22-900 -YEL-YEL-**	SAME	Not Used	Not Used
Checkpoint	2	090-5020-20 **22-900 -YEL-YEL-**	SAME	Not Used	Not Used
Teenage Mutant Ninja Turtles	2	090-5020-30 **23-900 -GRN-GRN-**	SAME	Not Used	Not Used
Batman	2	090-5020-30 **23-900 -GRN-GRN-**	SAME	Not Used	Not Used
Star Trek 25th Anniversary	2	090-5020-30 **23-900 -GRN-GRN-**	SAME	Not Used	Not Used
Hook	2	090-5030-00 **23-1100 -ORG-ORG-**	090-5020-30 **23-900 -GRN-GRN-**	Not Used	Not Used
Lethal Weapon 3	2	090-5030-00 **23-1100 -ORG-ORG-**	SAME	Not Used	Not Used
Star Wars	2	090-5032-00 **22-1080 -YEL-GRN-**	SAME	Not Used	Not Used
Rocky & Bullwinkle & Friends	2	090-5020-30 **23-900 -GRN-GRN-**	SAME	Not Used	Not Used
Jurassic Park	3	090-5020-30 **23-900 -GRN-GRN-**	SAME	Not Used	090-5030-00 **23-1100 -ORG-ORG-**

Table continued on the next page.

APPENDIX E

Flipper Coil Table †

GAME NAME	Nº of Flippers	FLIPPERS w/E.O.S. Switch		FLIPPERS no E.O.S. Switch	
		SPI Nº / GAUGE-TURNS / Color		SPI Nº / GAUGE-TURNS / Color	
		LOWER LEFT	LOWER RIGHT	UPPER LEFT	UPPER RIGHT
Last Action Hero	2	090-5020-30 **23-900 -GRN-GRN-**	SAME	Not Used	Not Used
Tales from the Crypt	3	090-5032-00 **22-1080 -YEL-GRN-**	SAME	Not Used	090-5041-00 **25-1800 -BLU-GRN-**
The Who's Tommy	3	090-5020-30 **23-900 -GRN-GRN-**	SAME	090-5041-00 **25-1800 -BLU-GRN-**	Not Used
WWF Royal Rumble	4	090-5032-00 **22-1080 -YEL-GRN-**	SAME	090-5041-00 **25-1800 -BLU-GRN-**	SAME
Guns N' Roses	3	090-5032-00 **22-1080 -YEL-GRN-**	SAME	090-5030-00 **23-1100 -ORG-ORG-**	Not Used
Maverick	3	090-5032-00 **22-1080 -YEL-GRN**	SAME	Not Used	090-5032-00 **22-1080 -YEL-GRN-**
Mary Shelley's Frankenstein	3	090-5030-00 **23-1100 -ORG-ORG-**	SAME	Not Used	090-5030-00 **23-1100 -ORG-ORG-**
Baywatch	4	090-5030-00 **23-1100 -ORG-ORG-**	090-5020-30 **23-900 -GRN-GRN-**	090-5025-00 **24-1570 -See Note-**	090-5030-00 **23-1100 -ORG-ORG-**
Batman Forever	3	090-5032-00 **22-1080 -YEL-GRN-**	090-5020-20 **22-900 -YEL-YEL-**	Not Used	090-5020-30 **23-900 -GRN-GRN-**
Apollo 13	2	090-5032-00 **22-1080 -YEL-GRN-**	SAME	Not Used	Not Used
Golden Eye	2	090-5032-00 **22-1080 -YEL-GRN-**	SAME	Not Used	Not Used
Twister	2	090-5020-20 **22-900 -YEL-YEL-**	090-5032-00 **22-1080 -YEL-GRN-**	Not Used	Not Used
ID4: Independence Day	3	090-5032-00 **22-1080 -YEL-GRN-**	SAME	Not Used	090-5020-30 **23-900 -GRN-GRN-**
Space Jam †	2	090-5032-00T **22-1080 -YEL-GRN-**	090-5020-20T **22-900 -YEL-YEL-**	Not Used	Not Used
The Star Wars Trilogy - Special Edition †	2	090-5032-00T **22-1080 -YEL-GRN-**	SAME	Not Used	Not Used
The Lost World: Jurassic Park †	2	090-5032-00T **22-1080 -YEL-GRN-**	SAME	Not Used	Not Used
The X-Files †	2	090-5032-00T **22-1080 -YEL-GRN-**	SAME	Not Used	Not Used
Starship Troopers †	3	090-5030-00T **23-1100 -ORG-ORG-**	SAME	Not Used	090-5032-00T **22-1080 -YEL-GRN-**
Viper Night Drivin' †	2	090-5030-00T **23-1100 -ORG-ORG-**	SAME	Not Used	Not Used
Lost In Space †	2	090-5030-00T **23-1100 -ORG-ORG-**	090-5032-00T **22-1080 -YEL-GRN-**	Not Used	Not Used
Godzilla †	2	090-5032-00T **22-1080 -YEL-GRN-**	SAME	Not Used	Not Used
South Park †	2	090-5030-00T **23-1100 -ORG-ORG-**	SAME	Not Used	Not Used
Harley-Davidson® † *and* Harley-Davidson® 2nd Ed. †	2	090-5032-00T **22-1080 -YEL-GRN-**	090-5030-00T **23-1100 -ORG-ORG-**	Not Used	Not Used
Striker Xtreme (NFL) †	3	090-5032-00T **22-1080 -YEL-GRN-**	090-5030-00T **23-1100 -ORG-ORG-**	090-5030-00T **23-1100 -ORG-ORG-**	Not Used
Sharkey's Shootout †	3	090-5030-00T **23-1100 -ORG-ORG-**	SAME	090-5030-00T **23-1100 -ORG-ORG-**	Not Used
High Roller Casino †	2	090-5020-20T **22-900 -YEL-YEL-**	090-5032-00T **23-1080 -YEL-GRN-**	Not Used	Not Used
Austin Powers™ †	2	090-5020-30 **23-900 -GRN-GRN-**	090-5030-00T **23-1100 -ORG-ORG-**	Not Used	Not Used
MONOPOLY® †	3	090-5032-00T **22-1080 -YEL-GRN-**	SAME	Not Used	090-5062-00T **23-1500 -BLU-BLU-**
Playboy †	2	090-5030-00T **23-1100 -ORG-ORG-**	SAME	Not Used	Not Used
RollerCoaster Tycoon™ †	4	090-5032-00T **22-1080 -YEL-GRN-**	SAME	090-5067-00T **25-1400 -RED-RED-**	090-5068-00T **25-1600 -WHT-WHT**
The Simpsons™ Pinball Party †	6* (5 with Flipper Bats)	090-5032-00T **22-1080 -YEL-GRN-**	SAME	Not Used	090-5030-00T **23-1100 -ORG-ORG-**
		** The Homer Head Assembly is affixed to an Upr. Rt. Style Flipper (no E.O.S. Switch):*		**Flippers (Mini-Bats) on 2nd Level Playfield:**	
			* 090-5020-20T **22-900 -YEL-YEL-**	090-5041-00T **25-1800 -BLU-GRN-**	090-5025-00T **24-1570 -See Note-**
Terminator® 3: Rise of the Machines™ †	2	090-5032-00T **22-1080 -YEL-GRN-**	SAME	Not Used	Not Used
The Lord of the Rings™ †	2	090-5020-20T **22-900 -YEL-YEL-**	SAME	Not Used	Not Used
Ripley's Believe It or Not!® †	3	090-5032-00T **22-1080 -YEL-GRN-**	SAME	Not Used	090-5067-00T **25-1400 -RED-RED-**

† Coil Part Nºs ending with a "T" signifies the Diode is on the top of the lug (on the coil-winding side); Coil Part Nºs ending with a "B" signifies the Diode is on the bottom of the lugs.

APPENDIX F

Motor Specification (White Star Board System* Only) Table

Game Name	Function	Specifications	Part Numer
Apollo 13	Rocket Up/Down Movement	Bowman Motor 24VAC 60Hz 3W 6 RPM CCW	515-6383-00 *incl. Connector*
	Moon Unit Rotational Orbit	Multi Products Motor 24VAC 50/60Hz 3W 6 RPM CCW	515-6487-00 *incl. Connector*
	Shaker	Johnson Motor *(Vibrator)* 10.5VDC 10 AMP 2950 RPM CW	041-5029-**00** *MOTOR ONLY*
Golden Eye	Satellite Left/Right Movement	Bowman Motor 24VAC 60Hz 3W 6 RPM CW	515-6528-00 *incl. Connector*
Twister	Spinning Disc with Magnet	Multi Products Motor 24VAC *(041-5026-00)* 50/60Hz 3W 325 RPM CCW	515-6347-00 *incl. Connector*
	Backbox Fan (Tornado Wind)	Multi Products Motor 24VAC *(041-5052-00)* 50/60Hz 3W 3600 RPM CW	515-6531-00 *incl. Connector*
ID4: Independence Day	Alien Head Open/Close Movement	Servo Motor *(94322)*	041-5045-00 *MOTOR ONLY*
SPACE JAM (NO MOTOR USED)			
The Star Wars Trilogy - S.E.	X-Wing Left/Right Movement	Bowman Motor 24VAC *(041-5058-00)* 60Hz 3W 10 RPM CCW	515-6383-01 *incl. Connector*
The Lost World: Jurassic Park	Snagger & Center Link Lift Up/Down Movement	Multi Products Motor 20VDC *(041-5059-03)* 9 RPM Non-Directional	515-6715-03 *incl. Connector*
	Shaker	Johnson Motor *(Vibrator)* 10.5VDC 10 AMP 2950 RPM CW	041-5029-**00** *MOTOR ONLY*
The X-Files	X-File Cabinet Lift Up/Down Movement	Multi Products Motor 20VDC 9 RPM CCW	041-5057-00 *MOTOR ONLY*
Starship Troopers	Warrior Bug Forward/Reverse Movement	Haydon Switch & Instrument, Inc. Stepper Motor 12VDC 4.6W *(041-5062-00)*, Series 36000: 1.4"ø *(Non-Captive Shaft **not included**)* HSI #36864-12 *(Unipolar)* Travel per Step: .004 Step Angle: 15°	515-6794-00 *incl. Connector* **Requires 7" Shaft:** 530-5503-00
VIPER NIGHT DRIVIN' (NO MOTOR USED)			
Lost In Space	Spinning Disc with Magnet	Multi Products Motor 24VAC *(041-5046-00)* 50/60Hz 3W 325 RPM CCW	515-6347-00 *incl. Connector*
Godzilla	Shaker ‡	Multi #3811 0630 Motor (Vibrator) 12VDC 3100 RPM CW *(w/DRL PTS)* ‡	041-5029-**01** *MOTOR ONLY*
SOUTH PARK (NO MOTOR USED)			
Harley-Davidson® *1st through 3rd Editions*	Shaker ‡	Multi #3811 0630 Motor (Vibrator) 12VDC 3100 RPM CW *(w/DRL PTS)* ‡	041-5029-**01** *MOTOR ONLY*
	Motorcycle Lift Up/Down Movement	Autotrol 24VAC *(041-5072-02)* 20 RPM CCW	515-7025-00 *incl. Connector*
Striker Xtreme (NFL)	Goalie (Linebacker) Left to Right Movement	Multi #3590 12VDC *(041-5075-00)* 60 RPM	515-7071-00 *incl. Connector*
Sharkey's Shootout	Mystery Ball Rotating Movement	Hankscraft Motor Model-E 24VAC *(041-5076-00)* 50/60Hz 3W 20 RPM CW	515-7095-00 *incl. Connector*
High Roller Casino	Roulette Wheel Rotating Movement	Multi Products Motor 20VDC *(041-5078-00)* 17 RPM CCW	515-7153-00 *incl. Connector*
	Up/Dn. Ramp in Slot Mach. Lift Up/Down Movement	Haydon Switch & Instrument, Inc. Stepper Motor 12VDC 4.6W *(041-5062-00)*, Series 36000: 1.4"ø *(Non-Captive Shaft **not included**)* HSI #36864-12 *(Unipolar)* Travel per Step: .004 Step Angle: 15°	515-6794-00 *incl. Connector* **Requires Shaft 4¼":** 530-5503-01
Austin Powers™	Time Machine Rotating Movement	Multi Products Motor 24VAC *(041-5079-00)* 50/60Hz 20RPM CCW	515-7141-00 *incl. Connector*
	Laser Beam Left to Right Directional	Autotrol Motor 24VAC *(041-5081-00)* 50/60Hz 4W 10RPM Bi-Directional	515-7171-00 *incl. Connector*
	Dr. Evil Target Lift Up/Down Movement	Hankscraft Motor Model-E 24VAC *(041-5030-00)* 50/60Hz 6RPM CCW	515-5900-00 *incl. Connector*
Monopoly®	Mini-Flipper (Waterworks) Rotating Movement	Multi Prod. Motor & Gear Box #7000 EX00159A 20VDC 50/60Hz 85RPM CC/CCW	041-5083-00 *MOTOR ONLY*
Playboy	Triangular Billboard Rotating Movement	Autotrol Motor *(BD511 150-1387)* 24VAC 50/60Hz 12RPM Bi-Directional	041-5086-02 *MOTOR ONLY*
	Centerfold Mechanism Open/Close Movement	Multi Products *(3680)* Motor 12v DC 10/12 RPM CC/CCW	041-5075-04 *MOTOR ONLY*
	Tease Drop Screen Lift Up/Down Movement	Haydon Switch & Instrument, Inc. Stepper Motor 12VDC 4.6W *(041-5062-00)*, Series 36000: 1.4"ø *(Non-Captive Shaft **not included**)* HSI #36864-12 *(Unipolar)* Travel per Step: .004 Step Angle: 15°	515-6794-00 *incl. Connector* **Requires 7" Shaft:** 530-5503-00

‡ ***Please Note:*** *"-01" Shaker Motor is **Not Compatible** with old Shaker Motor 041-5029-**00** (Shaker Motor Assy. 515-5893-00). THIS NEW MOTOR CAN ONLY BE USED IN NEW SHAKER MOTOR ASSY. 515-5893-**01**.*

Table continued on the next page.

Game Name	Function	Specifications	Part Number
ROLLERCOASTER TYCOON™ (NO MOTOR USED)			
THE SIMPSONS™ PINBALL PARTY (NO MOTOR USED)			
Terminator® 3: Rise of the Machines™	Backbox Ball Shooter Up/Down Movement	Multi Products Motor 24VAC *(041-5079-01)* 21 RPM CW	515-7317-00 *incl. Connector*
The Lord of the Rings™	Balrog *(Motor & Gate)* Open/Close Movement	Multi Prod. Motor 20VDC Series 600B *(or equiv.)* 50/60Hz 10 RPM Bi-Directional	041-5088-01 *MOTOR ONLY*
RIPLEY'S BELIEVE IT OR NOT!® (NO MOTOR USED)			
Elvis®	Elvis™ Front/Back Movement	Haydon Switch & Instrument, Inc. Stepper Motor 12VDC 10W *(041-5089-00)*, *(Non-Captive Shaft **not included**)* *HSI #46868-12-002*	500-6809-00 *incl. Connector* **Requires 7.25" Shaft:** 530-5658-00
	▶▶▶ OPTIONAL ◀◀◀ Shaker	Multi #3811 0630 Motor *(Vibrator)* 12VDC *(041-5029-**01**) 3100 RPM (w/DRL PTS)*	515-5893-01 *incl. Connector*
The Sopranos℠	Bada Bing! Girls x2 Rotating Posts Movement	Autotrol Synchronous Motor 24VAC 4W 50/60Hz 45.7/54.9 RPM Bi-Directional	041-5092-00 **w/1" Shaft + 12" Leads**
NASCAR® and [NDSE]	Back Panel Rotating *(Car)* Windmill *(Skill Ball Enter)*	Multi Products Motor & Gear Box 20VDC Model #8000 *(EX-04-073)* 10 RPM	041-5093-00 *MOTOR ONLY*
Grand Prix	Back Panel Rotating *(Car)* Windmill *(Skill Ball Enter)*	Multi Products Motor & Gear Box 20VDC Model #8000 *(EX-04-073)* 10 RPM	041-5093-00 *MOTOR ONLY*
World Poker Tour™ (WPT) (NO MOTOR USED)			
The Simpons™ Kooky Carnival	Bart on Skateboard Left/Right Movement	Multi Products Motor with Crank 24VAC *(041-5095-01)* 50/60Hz 3W 14 RPM	500-6947-01 *incl. Connector*
	Left & Right Ramps Up/Down Movement	Multi Products Motor 24VAC *(041-5048-01)* 50/60Hz 3W 15 RPM CCW *(Qty. 2 in game)*	515-7558-00 *incl. Connector*
	Shaker *(details in SKC Manual, Page **24**)*	Multi #3811 0630 Motor *(Vibrator)* 12VDC 3100 RPM *(w/DRL PTS)*	041-5029-**01** *MOTOR ONLY*
©Disney's Pirates of the Caribbean	Spinning Disk	Multi #3811**R** 0630 Motor *(Vibrator)* 12VDC *(041-5029-**04**)* 3100 RPM *(w/DRL PTS)* *-04 is RoHS compliant; can substitute with -01 domestic*	511-5024-04 *incl. Connector*
	Pirate Ship Sinking/Raising Movement	Multi Products Motor & Gear Box 24VDC Model #7000-DCM 12 RPM	041-5101-00 *MOTOR ONLY*
Family Guy™	Stewie Figurine Left & Right Movement	Stepper Motor NPM PF35T-48D4STD 5V RVB *(041-5102-00 Reference Only)*	511-5043-00 *incl. Connector*
Spider-Man™	Doc Ock, Sandman & 3-Bank Up/Down Movement	Sync. Motor 24VAC 50/60Hz 3W 12 RPM CW *(041-5103-00 Reference Only)*	511-5063-00 *incl. Connector*
	▶▶▶ OPTIONAL ◀◀◀ **Shaker Motor Kit** 502-5027-00	Multi #3811**R** 0630 Motor *(Vibrator)* 12VDC *(041-5029-**04**) 3100 RPM (w/DRL PTS)* *-04 is RoHS compliant; can substitute with -01 domestic*	515-5893-01 *incl. Connector*

APPENDIX F

Motor Specification Table

The following table only list games that used motors. *Part Numbers starting with "515-" will include the Wiring Harness & Connector.*

Game Name	Function	Specifications	Part №
ABC Monday Night Football	Goal Post Up/Down Movement	Motor 24v A.C. 60 RPM CW	515-5222-00
Phantom of the Opera	Organ Up/Down Movement	Bowman Motor 24v 60Hz 3W 11 RPM CCW	515-5256-00
Checkpoint	Mag Wheel (in Backbox)	Motor D.C. (KEN)	041-5005-00
	Shaker	Johnson Motor (Vibrator)	041-5002-00
Teenage Mutant Ninja Turtles	Spinning Pizza Ball Deflector	Gear Motor 24v A.C. 325 RPM CW	515-5397-00
Batman	Bar Target Up/Down Movement	Bowman Motor 24v 60Hz 3W 11 RPM CCW	515-5256-00
Star Trek 25th Anniversary	Swinging Target	Bowman Motor 24v 22½ RPM	515-5534-00
	Transporter F/X	Gear Motor 24v A.C. 3½ RPM	500-5421-00
	Cooling Fan (for Transporter F/X)	4½" Motor 12v	041-5014-00
Lethal Weapon 3	Spinning Light	Motor 2½ v A.C. 4000 RPM CCW	041-5017-00
Star Wars	Bar Target Up/Down Movement	Bowman Motor 24v 60hz 3W 11 RPM CCW	515-5256-00
	R2D2 Robot Left/Right Movement	Bowman Motor 24v A.C. 22½ RPM CW	515-5571-00
	Death Star Rotation	Bowman "G" Motor 24v A.C. 60Hz 6 RPM CW	515-5570-00
Rocky & Bullwinkle & Friends	Nell Log "Cutting Blade" Forward/Back Movement	Autotrol Model E Motor 24v 60hz 4W 3 RPM CCW	041-5023-00
Jurassic Park	T-Rex Left/Right Movement	Multi Motor 5v D.C.	041-5025-00
	T-Rex Up/Down Movement	Bowman Motor 24v 11 RPM CW	041-5026-00
	Shaker	Johnson Motor (Vibrator)	041-5002-00
Last Action Hero	Crane Left/Right Movement	Multi Products Motor 12v D.C. #3312 OSC	041-5027-00
	Shaker	Johnson Motor (Vibrator) 10.5v D.C. 10 AMP 2950 RPM CW	041-5029-00
Tales from the Crypt	Tombstone Up/Down Movement	Bowman Motor 24v A.C. 6 RPM CCW	515-5900-00
	Shaker	Johnson Motor (Vibrator) 10.5v D.C. 10 AMP 2950 RPM CW	041-5029-00
The Who's Tommy	Mirror Up/Down Movement	Bowman Motor 24v A.C. 6 RPM CCW	515-5900-00
	Flipper Blinders	Servo Motor (94102)	041-5032-00
	Spinning Airplane Propellers	Motor D.C.	041-5033-00
WWF Royal Rumble	Shaker	Johnson Motor (Vibrator) 10.5v D.C. 10 AMP 2950 RPM CW	041-5029-00
Maverick, The Movie	Turning Paddle Wheel	Motor 24v A.C. 10 RPM	041-5036-00
Mary Shelley's Frankenstein	Creature Head Left/Right Movement	Servo Motor (94102)	041-5032-00
Batman Forever	Cannon Left/Right Movement	Bowman Motor 24v A.C. 60Hz 3W 6 RPM CCW	515-6383-00

APPENDIX G

Part Number Prefix Classification Codes

I. Electrical Source, Energy & Signal Converters
- 010- Transformers
- 031- Speakers
- 090- Solenoids (Coils)
- 150- Filters, Outlets, Varistors, Thermistors
- 200- Fuses

II. Conductors, Connectors & Insulators
- 034- Line Cords
- 036- Cable Assemblies & Wiring Harnesses
- 041- Motors
- 045- Connectors (All Types)
- 055- Lugs (M/F), Pins (M/F), Discs, Ring Terminals, Terminal Strips, etc.
- 060- Polarizing Keys and Conn. Covers
- 077- Lamp Sockets

III. Circuits & Circuit Elements
- 100- ICs
- 110- Transistors
- 112- Diodes (All Types including LEDs & Modules)
- 121- Resistors
- 123- Resistors (Variable & Adjustable)
- 124- Regulators & Bridge Rectifiers
- 125- Capacitors (Radial Lytics & Ferrites)
- 126- Piezo Crystal
- 127- Heatsinks
- 130- Capacitors (Tecates & Ceramics)
- 140- Oscillators (Clocks/Crystals)
- 165- Light Bulbs
- 180- Switches
- 181- Switch Membranes (Pads) & Piezo Sensors
- 190- Relays
- 960- EPROM *(Raw Part)*
- 965- EPROM *(Programmed Part)*

IV. Bolts, Screws, Nuts, Washers & Nails
- 231- Bolts
- 232- Screws (Pan Head)
- 234- Screws (HWH)
- 237- Screws (Misc.)
- 240- Nuts (Misc.)
- 242- Washers (Flat, Round)
- 244- Washers (Split Lock)
- 245- Nyliners
- 246- Washers (Lockers, External Tooth)
- 281- Nails

V. Mechanical Components
- 249- Rivets
- 251- Pins (Dowel), Finishing Nails, Hairpins, Spring Pins and Clevis Pins
- 254- Stand-Offs, Spacers and Shims
- 260- Steel Ball (All Types Steel, Glowing, Delrin, etc.)
- 265- Springs (Extension)
- 266- Springs (Compression)
- 267- Springs (Torsion)
- 269- Springs (Washers - Belleville, Wave)
- 270- Retaining Rings
- 280- Grommets, Bushings and Nyliners
- 283- Bearings

VI. Handles, Locks, Catches, Latches, Keys
- 355- Handles, Locks, Catches, Latches and Keys

VII. Fabricated Parts
- 390- Hinges
- 501- Coin Doors
- 515- Sub-Assemblies
- 520- Printed Circuit Boards (PCBs)
- 522- Display Glass
- 525- Wood Parts
- 530- Screw Machined Parts
- 535- Fabricated Parts
- 545- Molded (Extruded) Plastic and Rubber Parts (Rings, Sleeves, etc.)
- 550- Molded (Inserts)

VIII. In-House Assemblies
- 500- End Product (Systems and Models)
- 502- Kits (Created In-House)
- 505- Cabinets (complete)
- 510- Riveted Sub-Assemblies (In-House)
- 511- Sub-Assemblies (In-House)
- 515- Sub-Assemblies*

**2 or more 515-'s but still a sub-assembly.*

IX. Bulk Materials
- 600- Braided Wire & Ground Straps
- 601- Stranded Wire
- 602- Ribbon Cable
- 604- Telephone Line Cord
- 605- Sleeving (Shrink Tubing)
- 625- Velcro (non-adhesive)
- 626- Foam Rubber, Foam Pads, Rubber Bumpers (Blue Pads), Tape (All Types) Velcro (adhesive) and String / Rope

X. Miscellaneous
- 000- Tools *(see also 777-)* and Supplies
- 040- Clamps, Ties & Clips
- 042- Pulleys
- 091- Coin Mechs
- 205- Fuse Holders
- 631- Staples
- 660- Glass (Playfield, Backglass, etc.)
- 675- Cleaners
- 705- Packing & Shipping Items
- 755- Instruction, Coin Cards, Ins. Sheets
- 756- Information Sheets, Service Bulletins, Instruction Sheets in Kits and Templates
- 777- Tools (Wrenches and Drivers)
- 780- Manuals
- 802- Decal Kits (comprised of 820's)
- 820- Decals, Mylar and Labels (Sheets/Sets)
- 803- Plastic Kits (comprised of 830's)
- 830- Plastic Pieces (Butyrate Sheets/Sets)
- 880- Toys, Models, Figurines, etc.
- 900- Game Posters

APPENDIX H

Playfield Inserts (Plastic Light Covers)

Patterns: **STARBURST** **STIPPLE** 	**STARBURST CIRCULAR** 5/8" ø **550-5000-XX**	**STARBURST CIRCULAR** 3/4" ø **550-5001-XX**	**STARBURST CIRCULAR** 1" ø **550-5002-XX**	**STARBURST CIRCULAR** 1-3/16" ø **550-5003-XX**	**STARBURST CIRCULAR** 1-1/2" ø **550-5004-XX**
STARBURST CIRCULAR 2-1/4" ø **550-5005-XX**	**STARBURST CIRCULAR** 2-3/4" ø **550-5006-XX**	**PLAIN CIRCULAR** 3/4" ø **550-5007-XX**	**PLAIN CIRCULAR** 1" ø **550-5008-XX**	**PLAIN CIRCULAR** 1-3/16" ø **550-5009-XX**	**PLAIN CIRCULAR** 1-1/2" ø **550-5010-XX**
PLAIN CIRCULAR 2-1/4" ø **550-5011-XX**	**PLAIN CIRCULAR** 2-3/4" ø **550-5012-XX**	**STIPPLE CIRCULAR** 1" ø **550-5048-XX**	**STIPPLE 1" SQUARE** 1" **550-5019-XX**	**ROLLOVER BUTTON BASE** **550-5026-XX**	**WHITE STAR** *(only in white)* **545-5015-00**
STIPPLE RECTANGULAR 1-1/2" X 3/4" **550-5018-XX**	**STIPPLE RECTANGULAR** 1-5/8" X 1-1/2" **550-5051-XX**	**STARBURST RECTANGULAR** 2-1/4" X 1-1/8" **550-5044-XX**	**PLAIN RECTANGULAR** 2-1/4" X 1-1/8" **550-5049-XX**	**PLAIN RECTANGULAR** 1-1/4" X 1-1/2" **550-5050-XX**	**PLAIN RECTANGULAR** 2" X 2-1/2" **550-5063-XX**
STARBURST MINI SHIELD 1" X 1" **550-5024-XX**	**STARBURST LARGE SHIELD** **550-5025-XX**	**MINI HOT DOG** 1-5/8" **550-5020-XX**	**BEVEL HOT DOG** 3-1/2" **550-5021-XX**	**PLAIN HOT DOG** 3-1/2" **550-5022-XX**	**BANANA** **550-5023-XX**
STARBURST ARROW-SMALL **550-5013-XX**	**STARBURST ARROW-LARGE** **550-5070-XX**	**STARBURST ARROW-HEAD SMALL** **550-5014-XX**	**STARBURST ARROW-HEAD LARGE** **550-5015-XX**	**STARBURST BULLET** **550-5016-XX**	**STARBURST TRIANGLE** **550-5017-XX**

Note: *The shapes and sizes shown above are not to scale. Some shapes may no longer be available in every color.*

Instructions: Parts which may come in various colors (i.e. targets, some posts, playfield inserts, etc.) end in a 2-digit number which correspond to the color of that part. The "**-XX**" in part number which may come in various colors should be replaced with the desired 2-Digit number corresponding to the color desired below. *Not all colors may be available.*

PLASTIC PART COLOR CHART

Nº	Color	Nº	Color	Nº	Color	Nº	Color	Nº	Color	Nº	Color
-00	**Black** or Solid Clear	**-03**	Amber	**-06**	Yellow	**-09**	Purple	**-12**	Fluor. Blue	**-15**	Luminescent
-01	Clear	**-04**	Green	**-07**	Orange	**-10**	Fluor. Orange	**-13**	Teal Green	**-16**	Gold
-02	Red	**-05**	Blue	**-08**	White	**-11**	Fluor. Green	**-14**	Gray	**-17**	Trans. Brown

APPENDIX I

Anti-Loft Stand-Up Targets

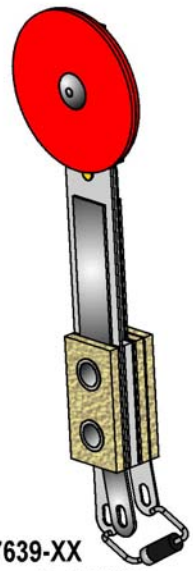

515-7639-XX
1" ø ROUND
ANTI-LOFT STAND-UP
SWITCH & TARGET
RIVETED ASSEMBLY*

515-7581-XX
1" X 1/2" NARROW RECTANGLE
ANTI-LOFT STAND-UP
SWITCH & TARGET
RIVETED ASSEMBLY*

Ordering Note:
-XX REPLACE WITH 2-DIGIT FOR COLOR:
Not all colors available
(colors shown not exact)

-02	Red
-03	Amber
-04	Green
-05	Blue
-06	Yellow
-07	Orange
-08	White

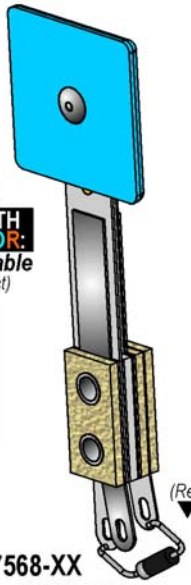

515-7568-XX
1" X 1" SQUARE
ANTI-LOFT STAND-UP
SWITCH & TARGET
RIVETED ASSEMBLY*

(Required on all Stand-Up Targets)
▼ Switch Diode, 1N4004
112-5003-00

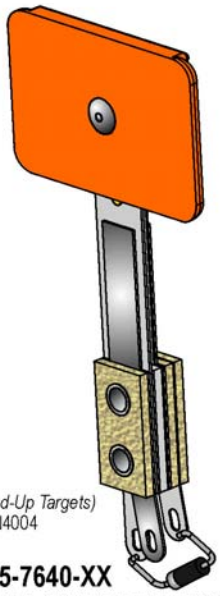

515-7640-XX
1" X 1-1/2" WIDE RECTANGLE
ANTI-LOFT STAND-UP
SWITCH & TARGET
RIVETED ASSEMBLY*

*Some targets may require the lugs position be changed to the left *or* to the right, depending on the application; these targets will have a different part number and are called out in the game manual they are used in *(see Section 4, Chapter 1, Parts Identification & Location, Playfield ... - Switches.) Review the game manual for the game desired for the original target used or application.*

For Anti-Loft Application use
Large Foam Pad,
5/8" X 7/16" X 3/16" Thick
626-5078-00

For** > Light < **Anti-Loft Application use
Small Foam Pad,
7/16" X 7/16" X 1/8" Thick
626-5029-00

Foam Pads have self-adhesive backing

or

Anti-Loft Switch Back Plate ▼
535-9823-01

ASM. REF. IN-HOUSE USE ONLY:
Light Anti-Loft Stand-Up Target Assemblies which includes the Anti-Loft Switch Back Plate, Switch Mounting Bracket and Foam Pad *(Small)*: 500-5835-XX (ROUND), 500-5857-XX (NARROW), 500-5232-XX (SQUARE) and 500-5321-XX (RECTANGLE).

Anti-Loft Stand-Up Target Assemblies which includes the Anti-Loft Switch Back Plate, Switch Mounting Bracket and Foam Pad *(Large)*: 500-7062-XX (ROUND), 500-6985-XX (NARROW), 500-6984-XX (SQUARE) and 500-7063-XX (RECTANGLE).

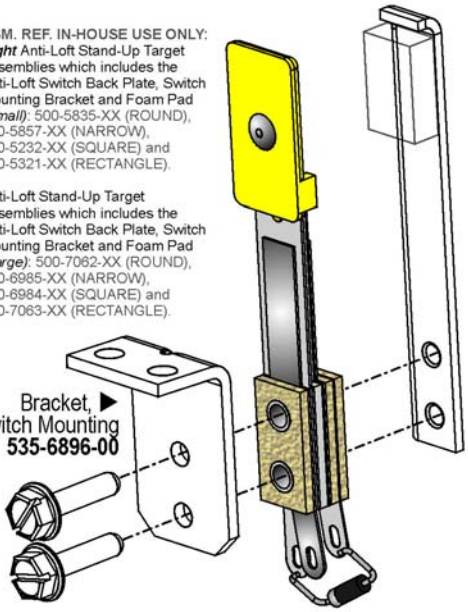

Bracket, ▶ Switch Mounting
535-6896-00

▲ #6-32 X 5/8" Slotted HWH Swage (Zinc) Screws (Qty. 2/per) **237-5976-04**

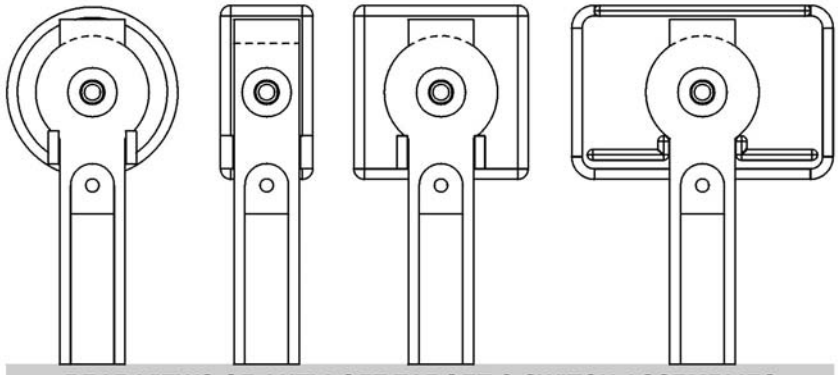

REAR VIEWS OF ANTI-LOFT TARGET & SWITCH ASSEMBLIES

The material of the Anti-Loft Switch has been extended higher to be used with the Anti-Loft Switch Back Plate. ***IMPORTANT:*** *Switch & Target Assemblies (**X**) **without** the extension (the predecessors) **SHOULD NOT** be used with an **Anti-Loft** Switch Back Plate (shown left).*

APPENDIX REFERENCE FOR PINBALL GAMES WHICH USED THE BELOW SWITCH & TARGET ASSEMBLIES NOTE:

*The Switch & Target Assemblies (**X**) **without** the extension have the following part numbers*: 515-5966-XX (Round), 515-5967-XX (Narrow), 515-5162-XX (Square) and 515-6027-XX (Rectangle) and should only be used with the Switch Back Plate (shown right), 535-6452-00 and Small Foam Pad, 626-5029-00.*

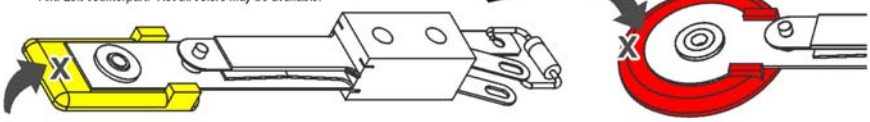

* *If the above referenced part numbers are no longer available from the factory or your distributor, it will be substituted with the appropriate Anti-Loft counterpart. Not all colors may be available.*

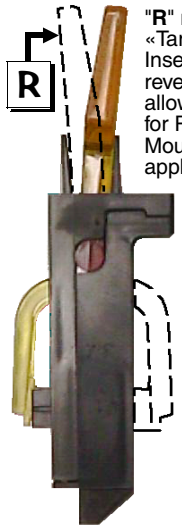

"**R**" means «Target Insert» is reversed, allowing for Rear Mounted application.

Take Note:

1. **Items A-E** come in various colors. *These targets may not be available in every color.* The **"-XX"** in should be replaced with the desired 2-Digit number for the color desired as described in the Color Chart below. *As of print date, the following colors were used :*
-01 Clear (A, D); **-02** Red (A, B, C, D, E); **-03** Amber (D, E); **-04** Green (A, B); **-05** Blue (C); **-06** Yellow (A, C), **-09** Purple (B, D); **-11** Fluorescent Green (A, B, D)
2. *For location(s) and type of Stand-Up Targets used, if any, see Section **4**, Chapter **1**, Parts Identification & Location.*

-XX REPLACE WITH 2-DIGIT FOR COLOR:
-00 Black
-01 Clear
-02 Red
-03 Amber
-04 Green
-05 Blue
-06 Yellow
-07 Orange
-08 White
-09 Purple
-10 Fluor. Orange
-11 Fluor. Green
-12 Fluor. Blue
-13 Teal Green
-14 Gray
-15 Luminescent
-16 Gold
Note: Not all colors available.

Nr.	STAND-UP TARGET PARTS	SPI PART Nr.
A	Modular Stand-Up Target Narrow Assy.	500-6138-XX
	Stand-Up Target Narrow (Insert)	**545-6138-XX**
B	Modular Stand-Up Target Square Assy.	500-6139-XX
	Stand-Up Target Square (Insert)	**545-6139-XX**
C	Modular Stand-Up Target Rectangle Assy.	500-6228-XX
	Stand-Up Target Rectangle (Insert)	**545-6228-XX**
D	Modular Stand-Up Target Round Assy.	500-6075-XX
	Stand-Up Target Round (Insert)	**545-6075-XX**
E	Mod. Stand-Up Target 1" Spherical Assy.	500-6189-XX
	Stand-Up Target 1" Spherical (Insert)	**545-6189-XX**

To Replace the « Target Insert » or change Target Orientation :

Items A-E Note: For the Target Assembly use the **"500-"** SPI Part Number(s) shown in the Parts Table below. To receive the Target Assembly with the « Target Insert » « ***R**eversed » simply add a **"R"** at the end of the Part Number. See Side View picture left to compare (dashed line shows target reversed).* For just the «Target Insert» use the **"545-"** SPI Part Number.

To reverse it yourself or to just change the insert:

1. With a small flat head screwdriver, push into the small tab at the bottom of the target front and give a slight twist motion to "pop" the two halves.

2. Push the Target Insert bottom in at the same time while you slide the top (front) part up, then let go of the insert as the two halves come apart.

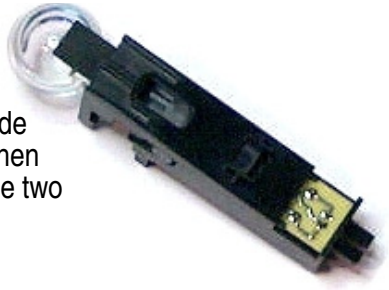

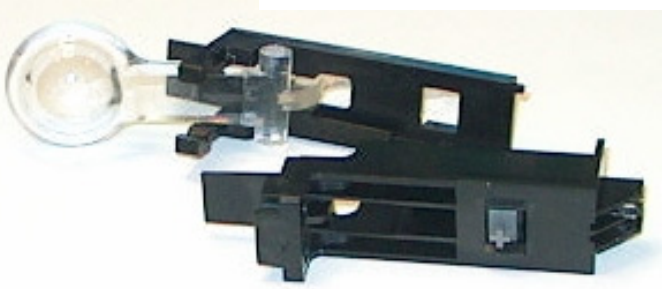

3. Replace target or reinsert it into the other size while sliding the two halves back together.

Note: *If you were reversing the orientation, don't forget to also turn the Switch Actuator PCB **180°**. Test Switch.*

APPENDIX J

Coin Cards (USA & International Pricing Defaults) ▶ For Yellow Stock add -Y to the Part Number

*If more than one Pricing Scheme is available for countries listed, the **F.** listed beside the option, denotes the Factory Default Setting.*

FOR VIEWS OF THE LATEST or OPTIONAL USA, INTERNATIONAL / EURO AND CUSTOM COIN CARDS, VISIT OUR WEBSITE.

Not Shown USA 755-5400-10 Tournament Option $2 = X1; 755-5400-11 Tournament Option $1.50 = X1

USA 10 **F.**	USA 10	USA 2-7 *or* CANADA	*FOR CUSTOM PRICING* †	USA 3 *with* ToPS™	USA 5 *with* ToPS™
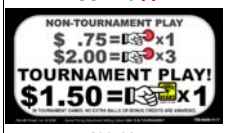		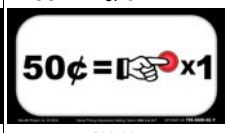			
755-5400-11 *Front*	755-5400-11 *Back*	755-5400-02 *Front*	755-5400-01, -02 *or* -04 *Back*	755-5400-03 *or* -09 *Front*	755-5400-03 *Back* / -08 *Front*
AUSTRALIA 1 *F.*	**AUSTRALIA 2**	**CROATIA**	*FOR CUSTOM PRICING* †	**DENMARK 1 *F.***	**DENMARK 2**
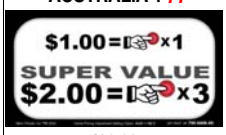					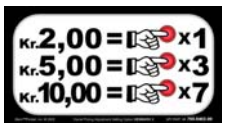
755-5406-00 *Front*	755-5406-00 *Back*	755-5410-00 *Front*	755-5410-00 *Back*	755-5402-00 *Front*	755-5402-00 *Back*
JAPAN 1	**JAPAN 2 *F.***	**MIDDLE EAST**	*ANY COUNTRY CAN USE*	**NEW ZEALAND 1 *F.***	**NEW ZEALAND 2**
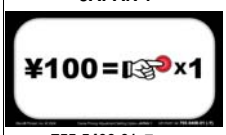	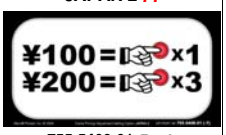	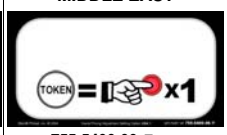	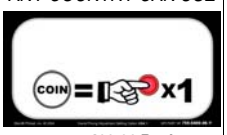		
755-5408-01 *Front*	755-5408-01 *Back*	755-5400-06 *Front*	*755-5400-06 Back*	*755-5406-00 Back*	755-5406-00 *Front*
NORWAY 1 *F.*	**NORWAY 2**	**RUSSIA *F.***	**RUSSIA (ALTERNATE)**	**SOUTH AFRICA**	*FOR CUSTOM PRICING* †
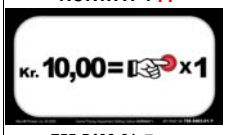	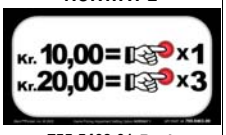	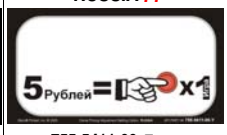	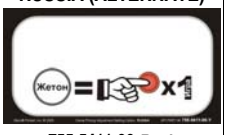		
755-5403-01 *Front*	755-5403-01 *Back*	755-5411-00 *Front*	755-5411-00 *Back*	755-5409-01 *Front*	755-5409-01 *Back*
SWEDEN 1 *F.*	**SWEDEN 2**	**SWITZERLAND 1 *F.***	**SWITZERLAND 2**	**TAIWAN**	*FOR CUSTOM PRICING* †
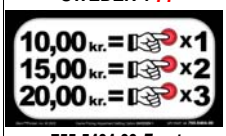	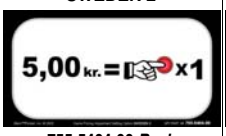	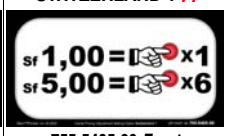	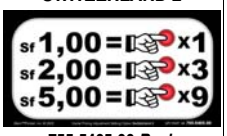		
755-5404-00 *Front*	755-5404-00 *Back*	755-5405-00 *Front*	755-5405-00 *Back*	755-5412-00 *Front*	755-5412-00 *Back*
UK 1	**UK 3**	**UK 5 *F.***	*FOR CUSTOM PRICING* †		
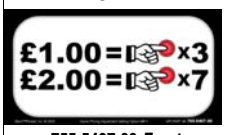	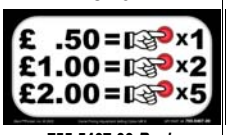	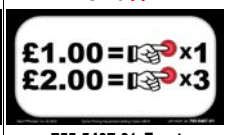			
755-5407-00 *Front*	755-5407-00 *Back*	755-5407-01 *Front*	755-5407-01 *Back*		

Appendix J Notes:

1. Coin Card on Game is determined by original shipping country destination.
2. Optional Coin Card(s), are available via your distributor or via free download @ www.sternpinball.com/**coinagecards.shtml**.

Older style Coin Cards (foreign or domestic) not available on our website or no longer available through your distributor, are obsolete.

3. Coin Cards which have a Blank Backside *can be used for* †***Custom Pricing***.

Not Shown EURO 755-5401-20 Tournament Custom (can fill in your own pricing).

EURO 1	EURO 2	EURO 3	EURO 4	EURO 5	EURO 6
	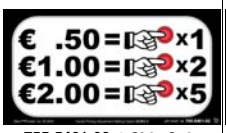	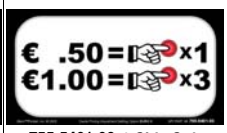	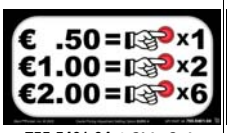	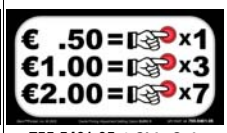	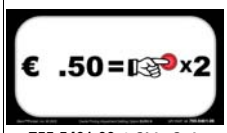
755-5401-01 *1-Side Only*	755-5401-02 *1-Side Only*	755-5401-03 *1-Side Only*	755-5401-04 *1-Side Only*	755-5401-05 *1-Side Only*	755-5401-06 *1-Side Only*
EURO 7	**EURO 8**	**EURO 9**	**EURO 10**	**EURO 11**	**EURO 12**
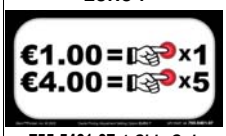	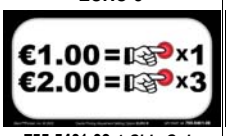	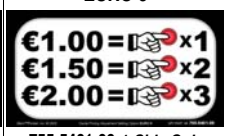	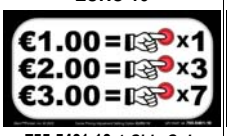	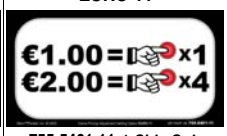	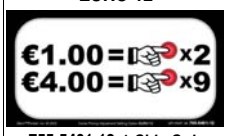
755-5401-07 *1-Side Only*	755-5401-08 *1-Side Only*	755-5401-09 *1-Side Only*	755-5401-10 *1-Side Only*	755-5401-11 *1-Side Only*	755-5401-12 *1-Side Only*

◣ EURO FACTORY DEFAULT SUMMARY TABLE ◢

EURO 1	EURO 2	EURO 3	EURO 4	EURO 5	EURO 6	EURO 7	EURO 8	EURO 9	EURO 10	EURO 11	EURO 12
BELGIUM ITALY 1 PORTUGAL	*GERMANY 2*	*NETHERLANDS SPAIN*			*GREECE*		*FINLAND*	*AUSTRIA*	*FRANCE*		

Section ***3***, *Chapter **4**, **GO TO ADJUSTMENTS MENU**, Adj. **18**, **Game Pricing**, **USA & International (non-Euro) and Euro 1-12 Summary & International (Euro) Standard Pricing Select Tables**, summarizes Standard or Custom Pricing Schemes & the Dip Switch Setting required.*